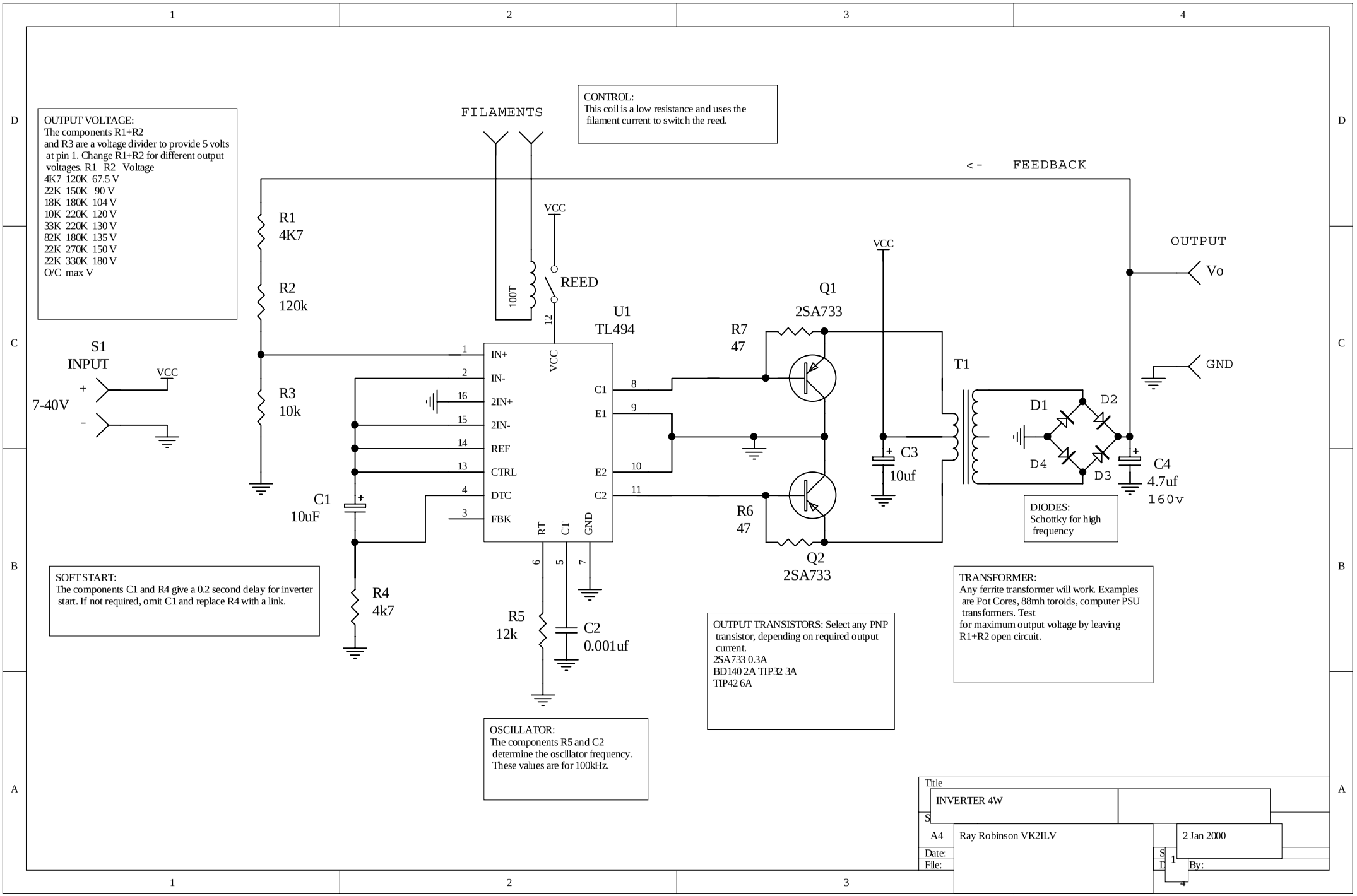
OUTPUT VOLTAGE:
The components R1+R2
and R3 are a voltage divider to provide 5 volts
at pin 1. Change R1+R2 for different output
voltages. R1 R2 Voltage
4K7 120K 67.5 V
22K 150K 90 V
18K 180K 104 V
10K 220K 120 V
33K 220K 130 V
82K 180K 135 V
22K 270K 150 V
22K 330K 180 V
O/C max V
CONTROL:
This coil is a low resistance and uses the
filament current to switch the reed.
FILAMENTS
<- FEEDBACK
R1
4K7
R2
120k
R3
10k
S1
INPUT
7-40V
VCC
100T
REED
U1
TL494
IN+
IN-
2IN+
2IN-
REF
CTRL
DTC
FBK
C1
C2
E1
E2
RT
CT
GND
C1
10uF
R4
4k7
R5
12k
C2
0.001uF
R7
47
R6
47
Q1
2SA733
Q2
2SA733
C3
10uf
T1
D1
D2
D3
D4
C4
4.7uf
160v
OUTPUT
Vo
GND
DIODES:
Schottky for high
frequency
SOFT START:
The components C1 and R4 give a 0.2 second delay for inverter
start. If not required, omit C1 and replace R4 with a link.
OUTPUT TRANSISTORS: Select any PNP
transistor, depending on required output
current.
2SA733 0.3A
BD140 2A TIP32 3A
TIP42 6A
TRANSFORMER:
Any ferrite transformer will work. Examples
are Pot Cores, 88mh toroids, computer PSU
transformers. Test
for maximum output voltage by leaving
R1+R2 open circuit.
OSCILLATOR:
The components R5 and C2
determine the oscillator frequency.
These values are for 100kHz.
Title
INVERTER 4W
A4
Ray Robinson VK2ILV
2 Jan 2000
Date:
File:
By: