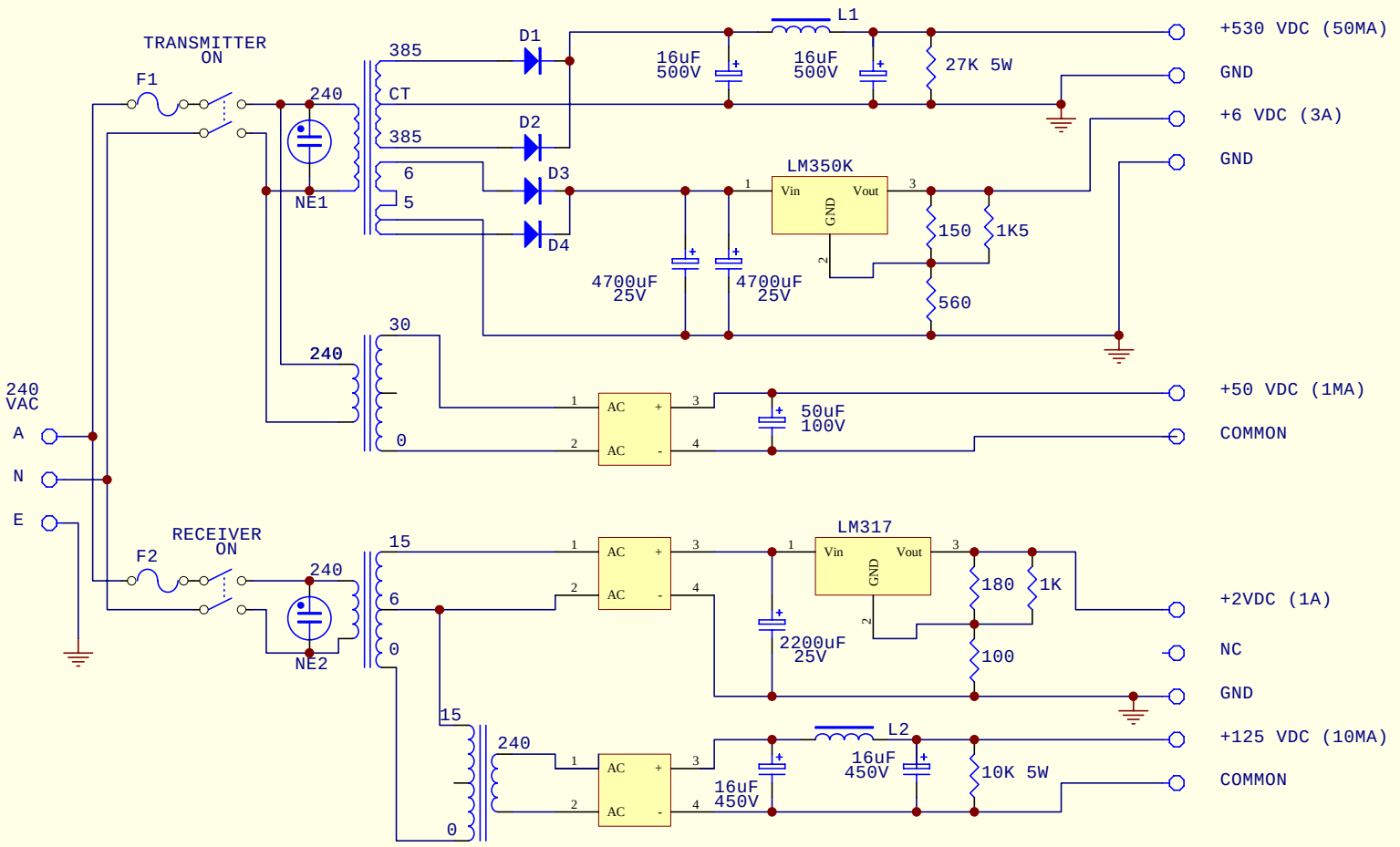

Title MACKAY POWER SUPPLY		
Size A4	Number RAY ROBINSON	Revision
Date: 5-May-2008		Sheet of
File: C:\DOCUME~1\..\MACKAYPS.S01		Drawn By: