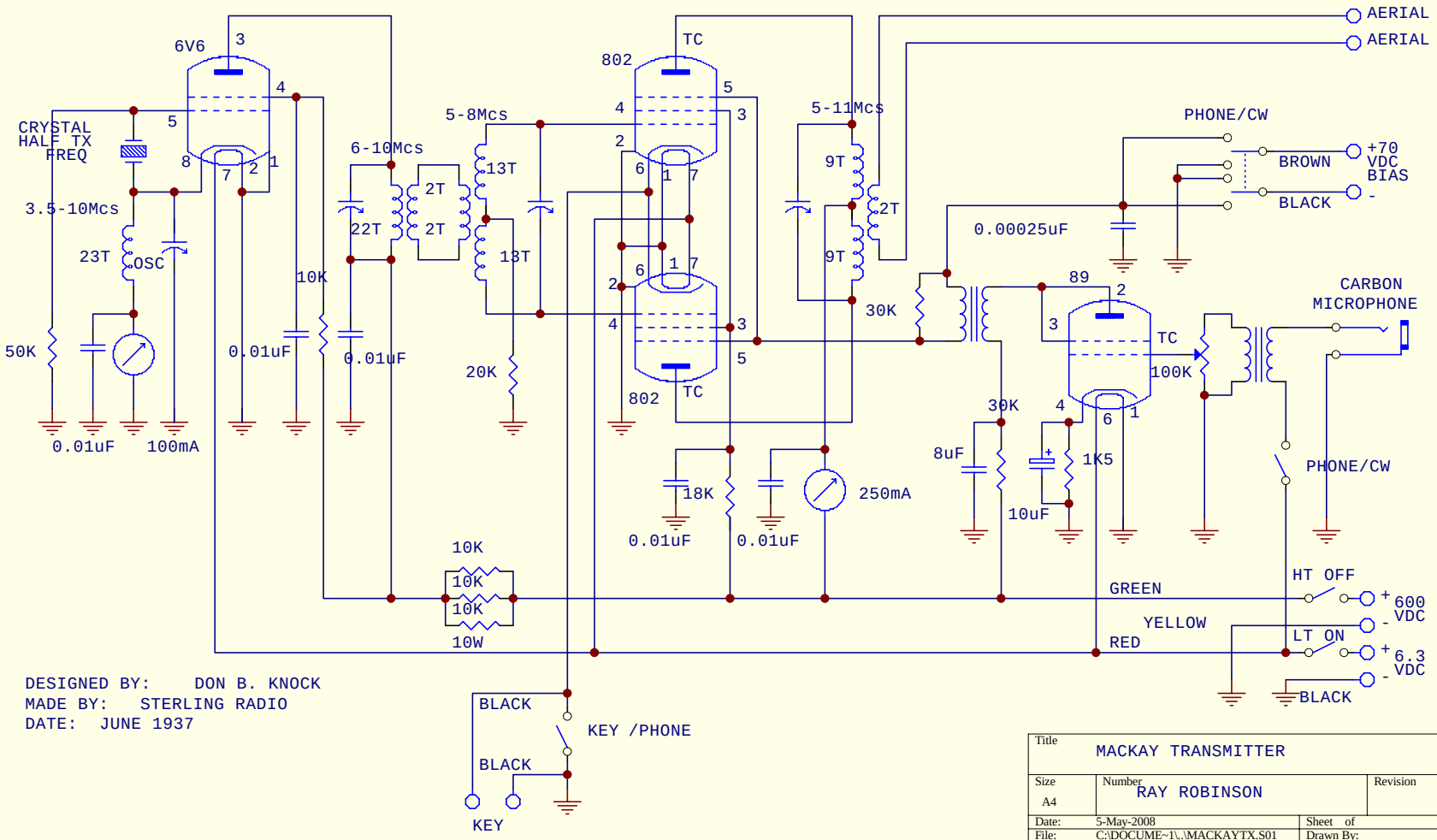
6V6
CRYSTAL
HALF TX
FREQ
3.5-10Mcs
23T
OSC
50K
0.01uF
100mA
0.01uF
10K
0.01uF
6-10Mcs
22T
2T
2T
5-8Mcs
13T
18T
20K
802
TC
802
TC
18K
0.01uF
0.01uF
250mA
5-11Mcs
9T
2T
9T
30K
0.00025uF
89
TC
100K
30K
8uF
1K5
10uF
PHONE/CW
BROWN
BLACK
+70
VDC
BIAS
-
CARBON
MICROPHONE
PHONE/CW
AERIAL
AERIAL
HT OFF
GREEN
YELLOW
RED
LT ON
+
600
VDC
-
+
6.3
VDC
-
BLACK
10K
10K
10K
10W
BLACK
BLACK
KEY /PHONE
KEY
DESIGNED BY: DON B. KNOCK
MADE BY: STERLING RADIO
DATE: JUNE 1937
Title
MACKAY TRANSMITTER
Size
A4
Number
RAY ROBINSON
Revision
Date: 5-May-2008
Sheet of
File: C:\DOCUME~1\..\MACKAYTX.S01
Drawn By: