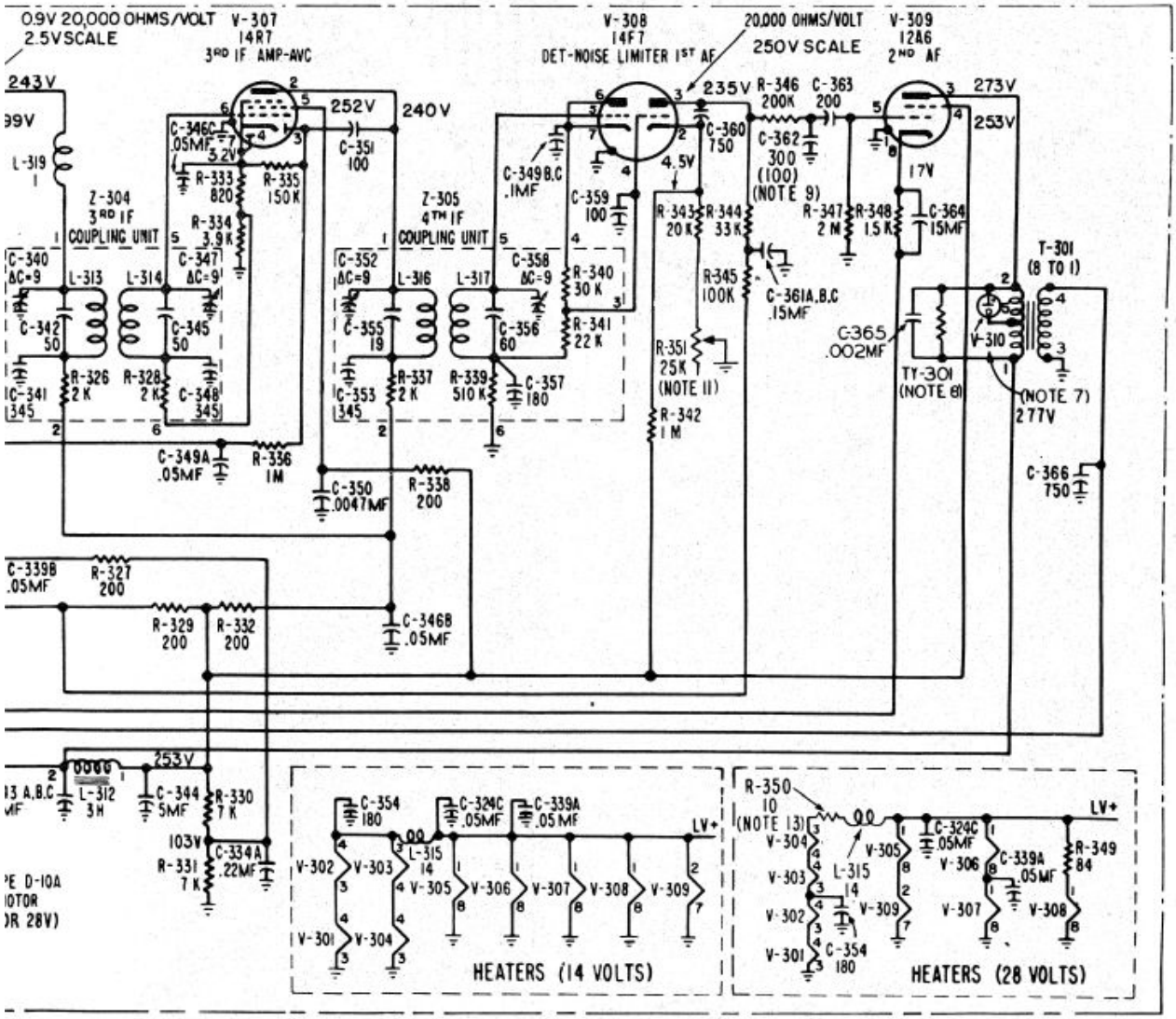

Figure 4-14. Radio Receiver ARC Type R-19, Schematic Diagram

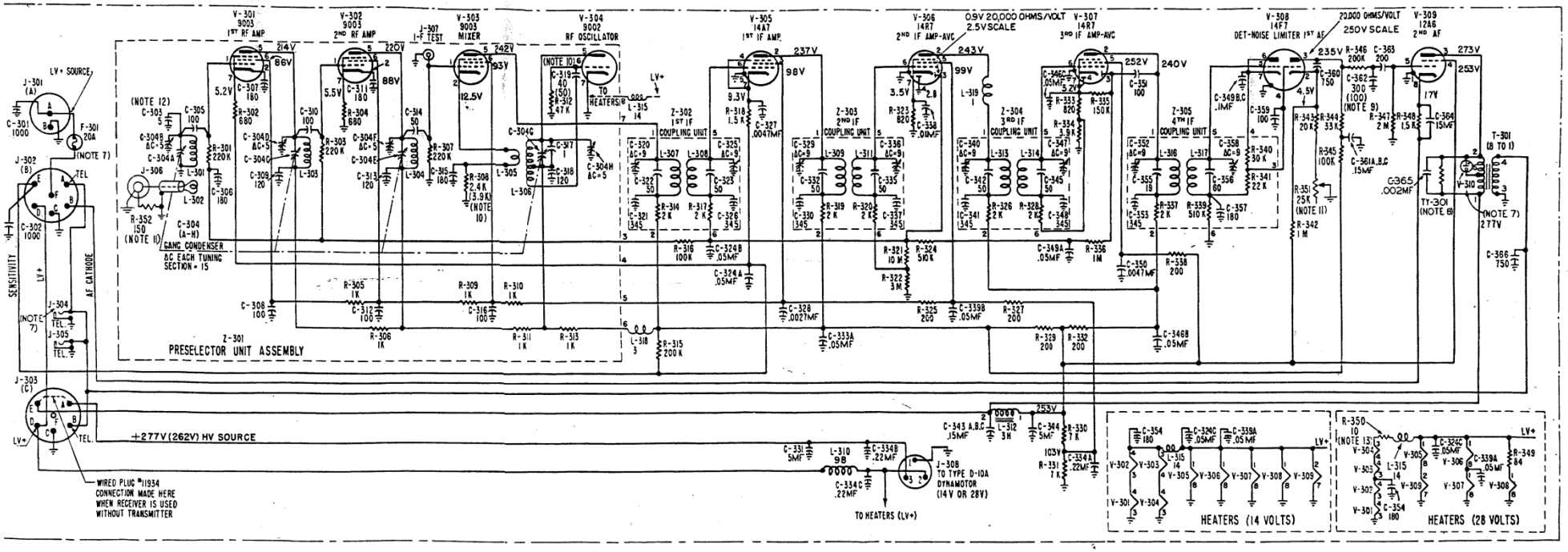

Figure 4-14. Radio Receiver ARC Type R-19, Schematic Diagram

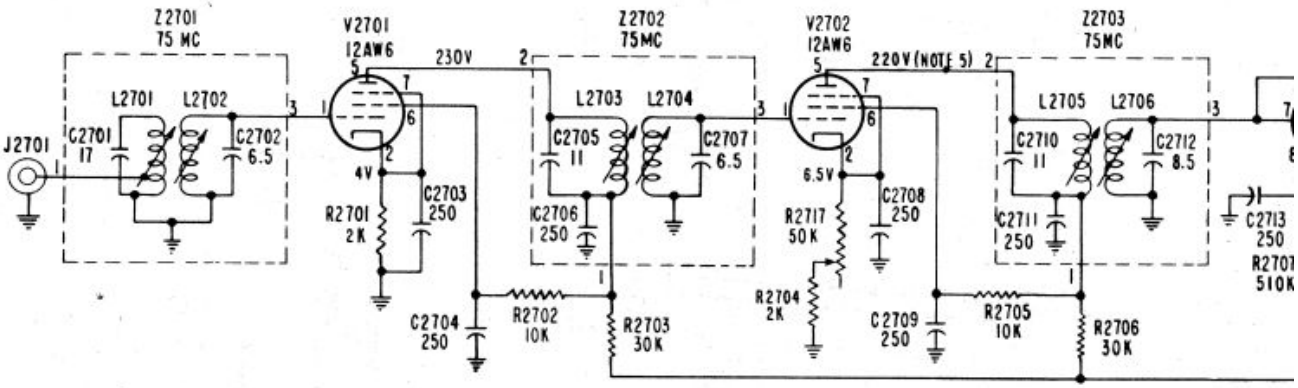

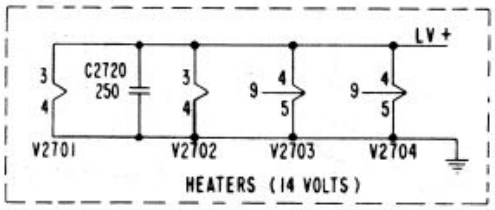

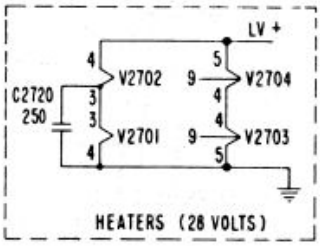

NOTES:

1. CAPACITOR VALUES ARE IN MICROMICROFARADS UNLESS FOLLOWED BY "MF" - MICROFARAD.

2. RESISTOR VALUES ARE IN OHMS UNLESS FOLLOWED BY MULTIPLIER: K = 1,000; MEG = 1,000,000.

3. WITH NO EXTERNAL LOAD ON TERMINAL "B" OF J2702, THE AUDIO OUTPUT IS APPROXIMATELY 5.5 V AC WHEN AN INPUT SIGNAL, MODULATED 30 PERCENT WITH 400 CYCLES, IS APPLIED AT A LEVEL JUST SUFFICIENT TO OPERATE THE RELAY. OTHER VOLTAGES SHOWN ARE DC, AND ARE OBTAINED WHEN HIGH VOLTAGE IS EQUAL TO 250 V, AND WITH NO INPUT SIGNAL.

4. D-C VOLTAGES ARE APPROXIMATE VOLTAGES TO GROUND AS MEASURED WITH A VOLTMETER HAVING A RESISTANCE OF 20,000 OHMS-PER-VOLT AND WITH NO SIGNAL INPUT TO THE RECEIVER.

5. VOLTAGE AT THIS POINT IS DEPENDENT ON SETTING OF R2717 AND MAY BE BETWEEN 170 AND 230 VOLTS.

511507 O - 59

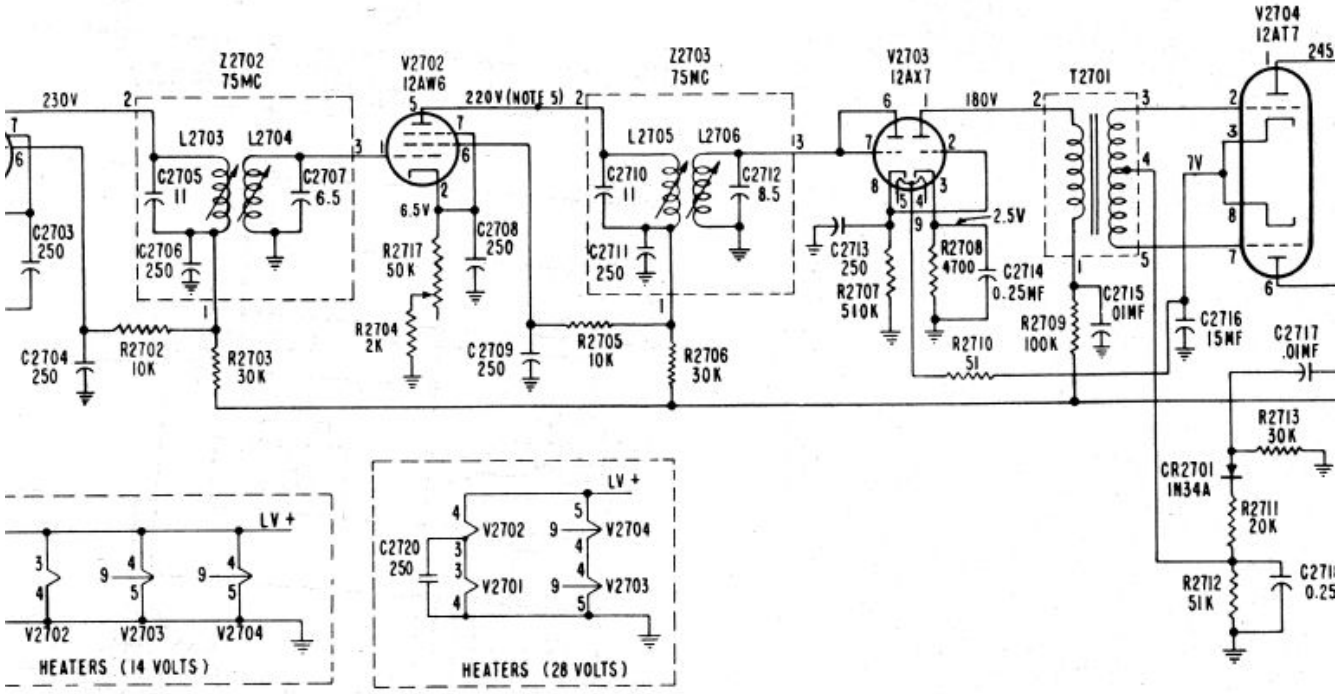

IN MICROMICROFARADS UNLESS FOLLOWED

OHMS UNLESS FOLLOWED BY MULTIPLIER:
0.

D ON TERMINAL "B" OF J2702, THE AUDIO OUTPUT
AC WHEN AN INPUT SIGNAL, MODULATED 30 PERCENT
LIED AT A LEVEL JUST SUFFICIENT TO OPERATE
TAGES SHOWN ARE DC, AND ARE OBTAINED WHEN
TO 250 V, AND WITH NO INPUT SIGNAL.

ROXIMATE VOLTAGES TO GROUND AS MEASURED
ING A RESISTANCE OF 20,000 OHMS-PER-VOLT
UT TO THE RECEIVER.

IS DEPENDENT ON SETTING OF R2717 AND MAY BE
OLTS.

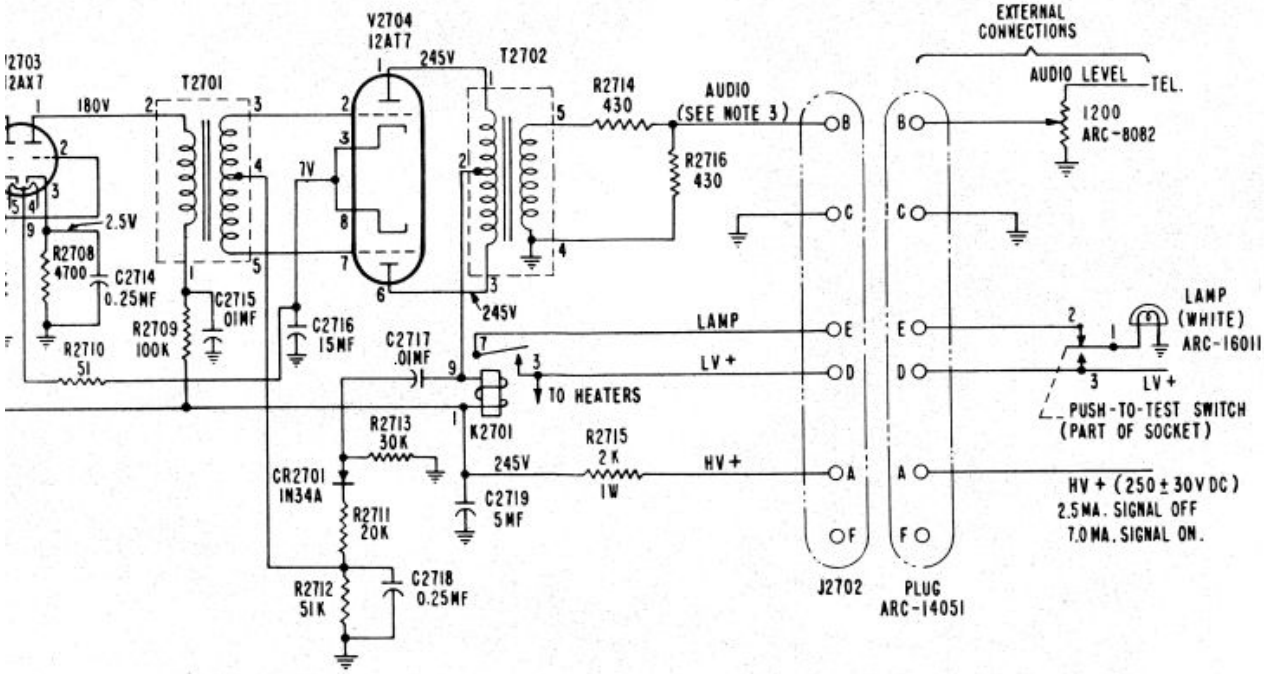

Figure 4-15. Radio Receiver ARC Type R-20, Schematic Diagram

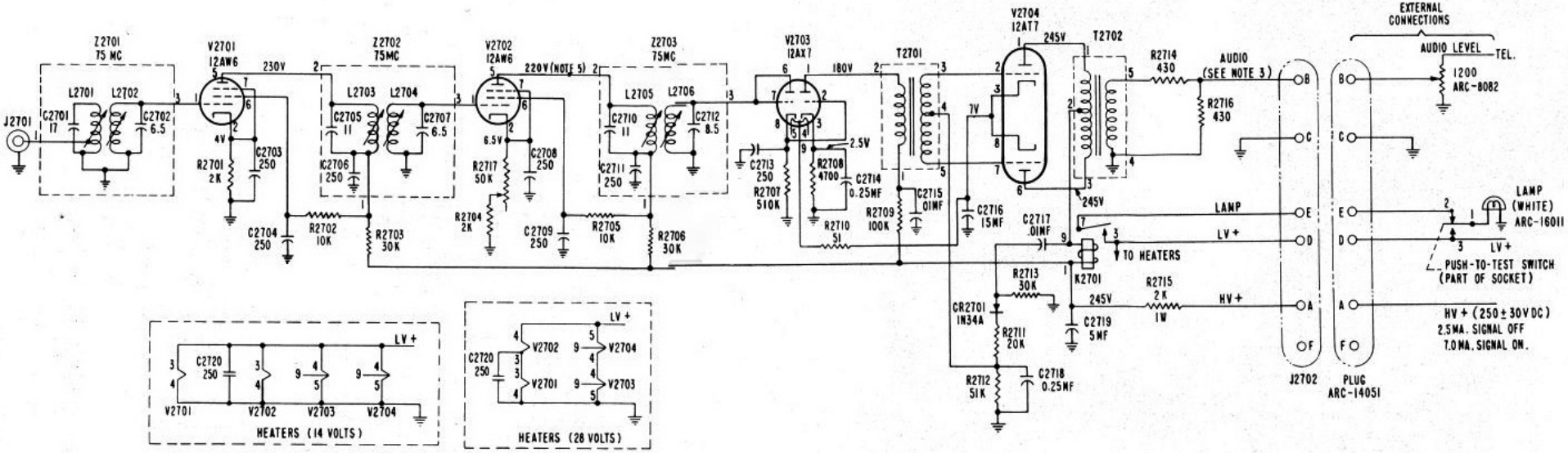

NOTES:

1. CAPACITOR VALUES ARE IN MICROMICROFARADS UNLESS FOLLOWED BY "MF" - MICROFARAD.
2. RESISTOR VALUES ARE IN OHMS UNLESS FOLLOWED BY MULTIPLIER: K = 1,000; MEG = 1,000,000.
3. WITH NO EXTERNAL LOAD ON TERMINAL "B" OF J2702, THE AUDIO OUTPUT IS APPROXIMATELY 5.5 V AC WHEN AN INPUT SIGNAL, MODULATED 30 PERCENT WITH 400 CYCLES, IS APPLIED AT A LEVEL JUST SUFFICIENT TO OPERATE THE RELAY. OTHER VOLTAGES SHOWN ARE DC, AND ARE OBTAINED WHEN HIGH VOLTAGE IS EQUAL TO 250 V, AND WITH NO INPUT SIGNAL.
4. D-C VOLTAGES ARE APPROXIMATE VOLTAGES TO GROUND AS MEASURED WITH A VOLTMETER HAVING A RESISTANCE OF 20,000 OHMS-PER-VOLT AND WITH NO SIGNAL INPUT TO THE RECEIVER.
5. VOLTAGE AT THIS POINT IS DEPENDENT ON SETTING OF R2717 AND MAY BE BETWEEN 170 AND 230 VOLTS.

Figure 4-15. Radio Receiver ARC Type R-20, Schematic Diagram

511597 O - 59

NOTES:

1. CONNECTIONS ARE SHOWN TO WIRED SIDE OF CONNECTORS.
2. CAPACITOR VALUES ARE IN MICROMICROFARADS UNLESS FOLLOWED BY "MF" - MICROFARAD.
3. RESISTOR VALUES ARE IN OHMS UNLESS FOLLOWED BY MULTIPLIER: K = 1,000; MEG = 1,000,000.
4. INDUCTOR VALUES ARE IN MICROHENRIES UNLESS FOLLOWED BY "MH" - MILLIHENRY (1,000 MICROHENRIES) OR "H" - HENRY.
5. ALL RELAYS ARE SHOWN UNENERGIZED. FOR KEYED RELAYS K-201 AND K-202 THIS IS THE STANDBY POSITION.
6. D-C VOLTAGES SHOWN ARE FOR THE TRANSMIT POSITION AND ARE OBTAINED WITH A 20,000 OHMS-PER-VOLT VOLTMETER AND WITH LV+ SET AT THE NOMINAL SUPPLY VOLTAGE OF 14 VOLTS OR 28 VOLTS. ALL VOLTAGES ARE APPROXIMATE AND WILL BE A LITTLE HIGHER FOR THE 28-VOLT EQUIPMENT THAN FOR THE 14-VOLT EQUIPMENT.
7. VALUE SHOWN IN PARENTHESIS USED BEGINNING WITH SERIAL NO. 1001 OF T-11A (14V) AND SERIAL NO. 701 OF T-11A (28V).
8. ADDED BEGINNING WITH SERIAL NO. 1001 OF T-11A (14V) AND SERIAL NO. 701 OF T-11A (28V).
9. VALUE SHOWN IN PARENTHESIS USED BEFORE SERIAL NO. 1420 OF T-11A (14V) AND SERIAL NO. 2780 OF T-11A (28V).
10. ADDED BEGINNING WITH SERIAL NO. 1420 OF T-11A (14V) AND SERIAL NO. 2780 OF T-11A (28V).
11. fo = OUTPUT FREQUENCY.

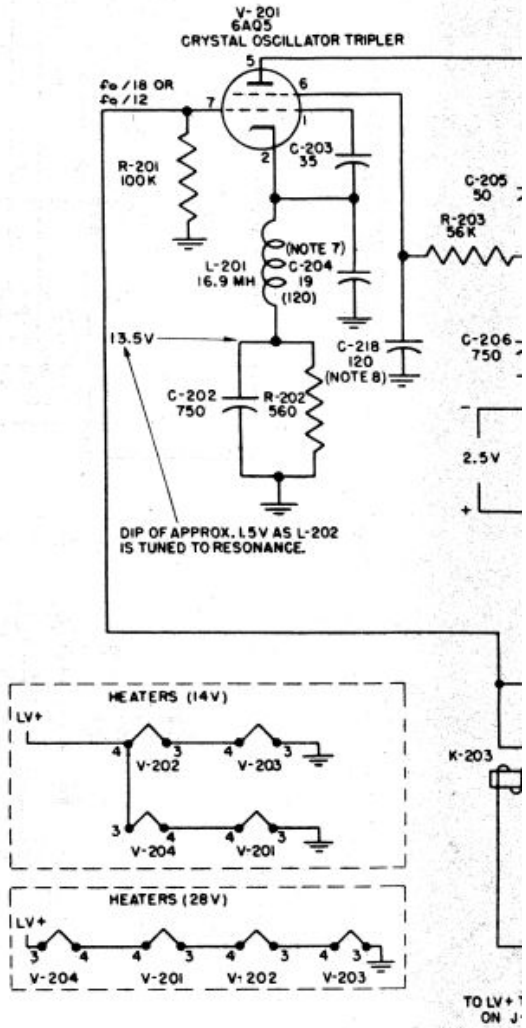

511507 O - 59

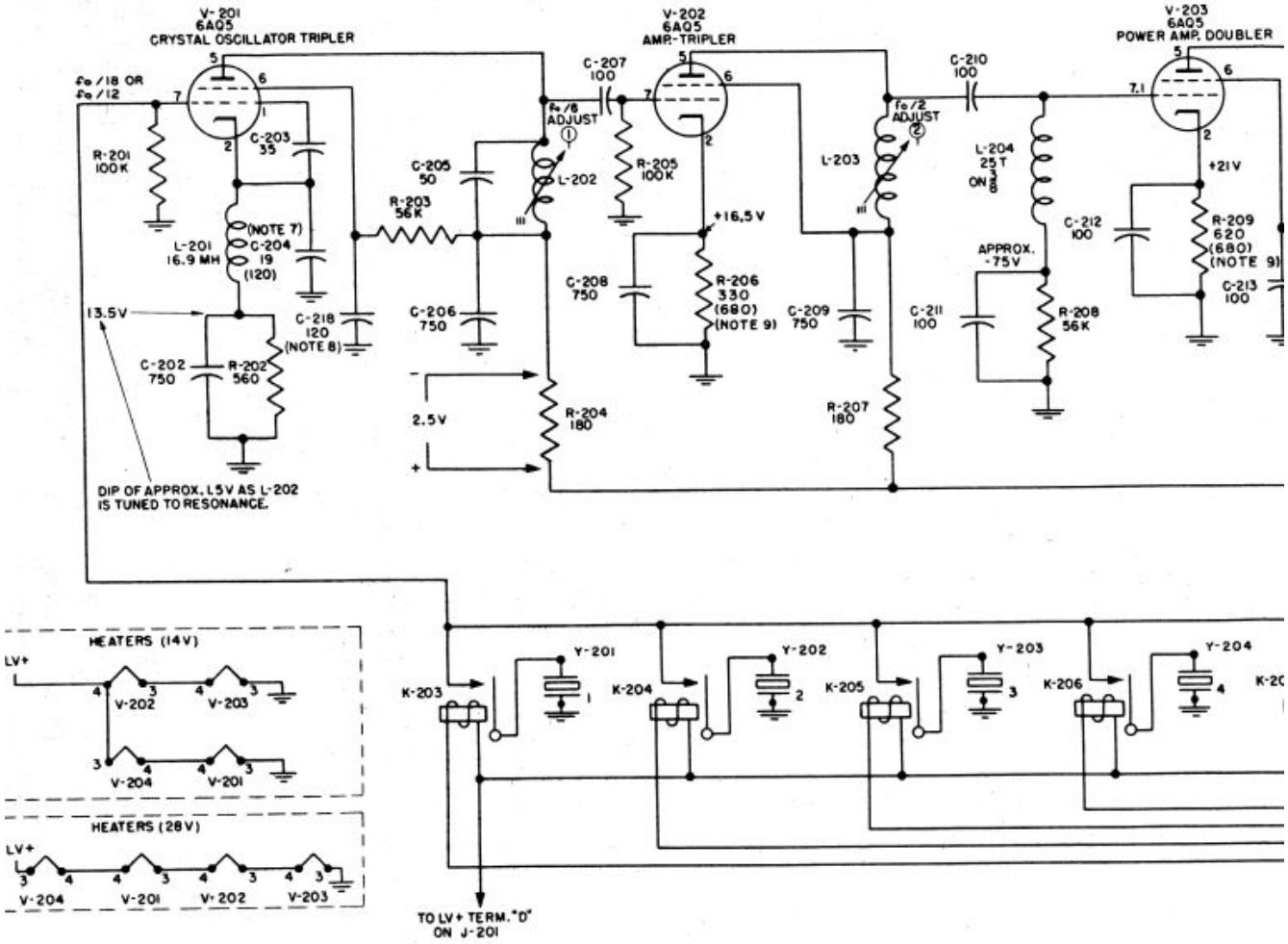
V-201
6AQ5
CRYSTAL OSCILLATOR TRIPLER
V-202
6AQ5
AMP.-TRIPLER
V-203
6AQ5
POWER AMP. DOUBLER
fo/18 OR
fo/12
R-201
100K
C-203
35
L-201
16.9 MH
(NOTE 7)
C-204
19
(120)
13.5V
C-202
750
R-202
560
C-218
120
(NOTE 8)
DIP OF APPROX. 1.5V AS L-202
IS TUNED TO RESONANCE.
R-203
56K
C-205
50
C-206
750
fo/8
ADJUST
L-202
R-204
180
2.5V
C-207
100
R-205
100K
+16.5V
C-208
750
R-206
330
(680)
(NOTE 9)
L-203
C-209
750
R-207
180
fo/2
ADJUST
C-210
100
L-204
25T
ON 3/8
C-211
100
APPROX.
-75V
R-208
56K
C-212
100
+21V
R-209
620
(680)
(NOTE 9)
C-213
100
HEATERS (14V)
LV+
V-202
V-203
V-204
V-201
HEATERS (28V)
LV+
V-204
V-201
V-202
V-203
K-203
K-204
K-205
K-206
Y-201
Y-202
Y-203
Y-204
TO LV+ TERM. "D"
ON J-201

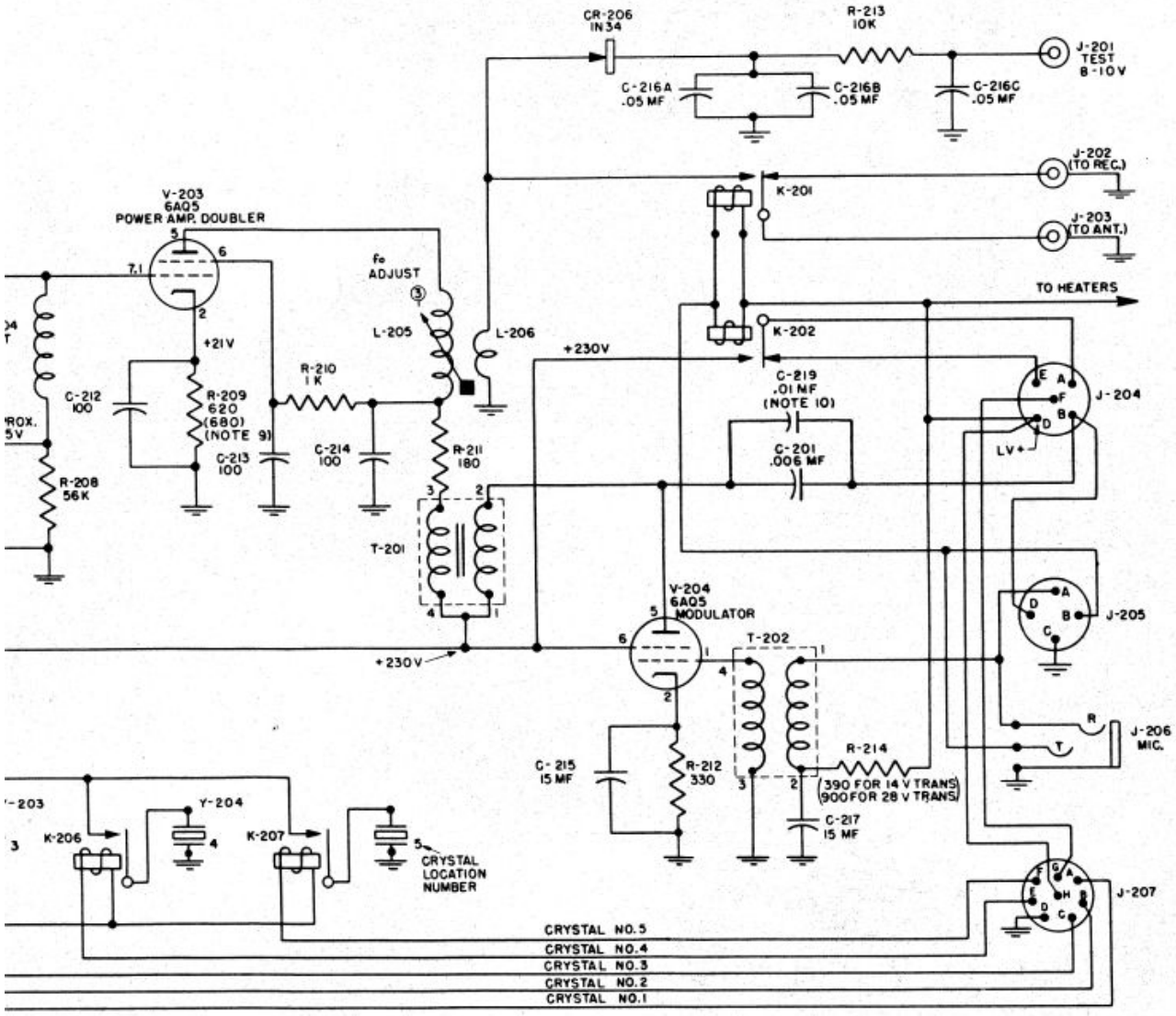

Figure 4-16. Radio Transmitter ARC Type T-11A, Schematic Diagram

NOTES:

1. CONNECTIONS ARE SHOWN TO WIRED SIDE OF CONNECTORS.
2. CAPACITOR VALUES ARE IN MICROMICROFARADS UNLESS FOLLOWED BY "MF" - MICROFARAD.
3. RESISTOR VALUES ARE IN OHMS UNLESS FOLLOWED BY MULTIPLIER: K = 1,000; MEG = 1,000,000.
4. INDUCTOR VALUES ARE IN MICROHENRIES UNLESS FOLLOWED BY "MH" - MILLIHENRY (1,000 MICROHENRIES) OR "H" - HENRY.
5. ALL RELAYS ARE SHOWN UNENERGIZED, FOR KEYED RELAYS K-201 AND K-202 THIS IS THE STANDBY POSITION.
6. D-C VOLTAGES SHOWN ARE FOR THE TRANSMIT POSITION AND ARE OBTAINED WITH A 20,000 OHMS-PER-VOLT VOLTMETER AND WITH LV+ SET AT THE NOMINAL SUPPLY VOLTAGE OF 14 VOLTS OR 28 VOLTS. ALL VOLTAGES ARE APPROXIMATE AND WILL BE A LITTLE HIGHER FOR THE 28-VOLT EQUIPMENT THAN FOR THE 14-VOLT EQUIPMENT.
7. VALUE SHOWN IN PARENTHESIS USED BEGINNING WITH SERIAL NO. 1001 OF T-11A (14V) AND SERIAL NO. 701 OF T-11A (28V).
8. ADDED BEGINNING WITH SERIAL NO. 1001 OF T-11A (14V) AND SERIAL NO. 701 OF T-11A (28V).
9. VALUE SHOWN IN PARENTHESIS USED BEFORE SERIAL NO. 1420 OF T-11A (14V) AND SERIAL NO. 2780 OF T-11A (28V).
10. ADDED BEGINNING WITH SERIAL NO. 1420 OF T-11A (14V) AND SERIAL NO. 2780 OF T-11A (28V).
11. fo = OUTPUT FREQUENCY.

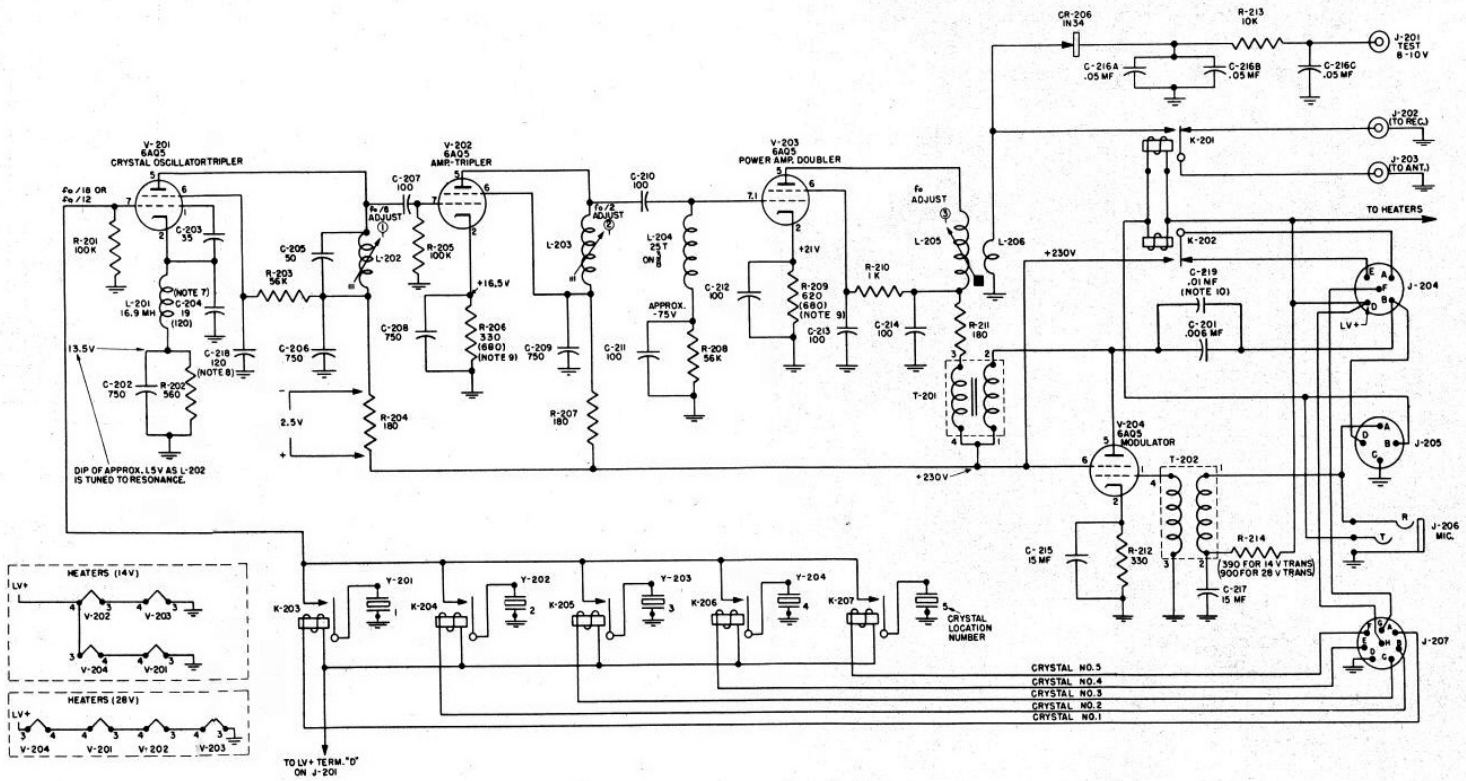

Figure 4-16. Radio Transmitter ARC Type T-11A, Schematic Diagram

4-1-O-1-1515

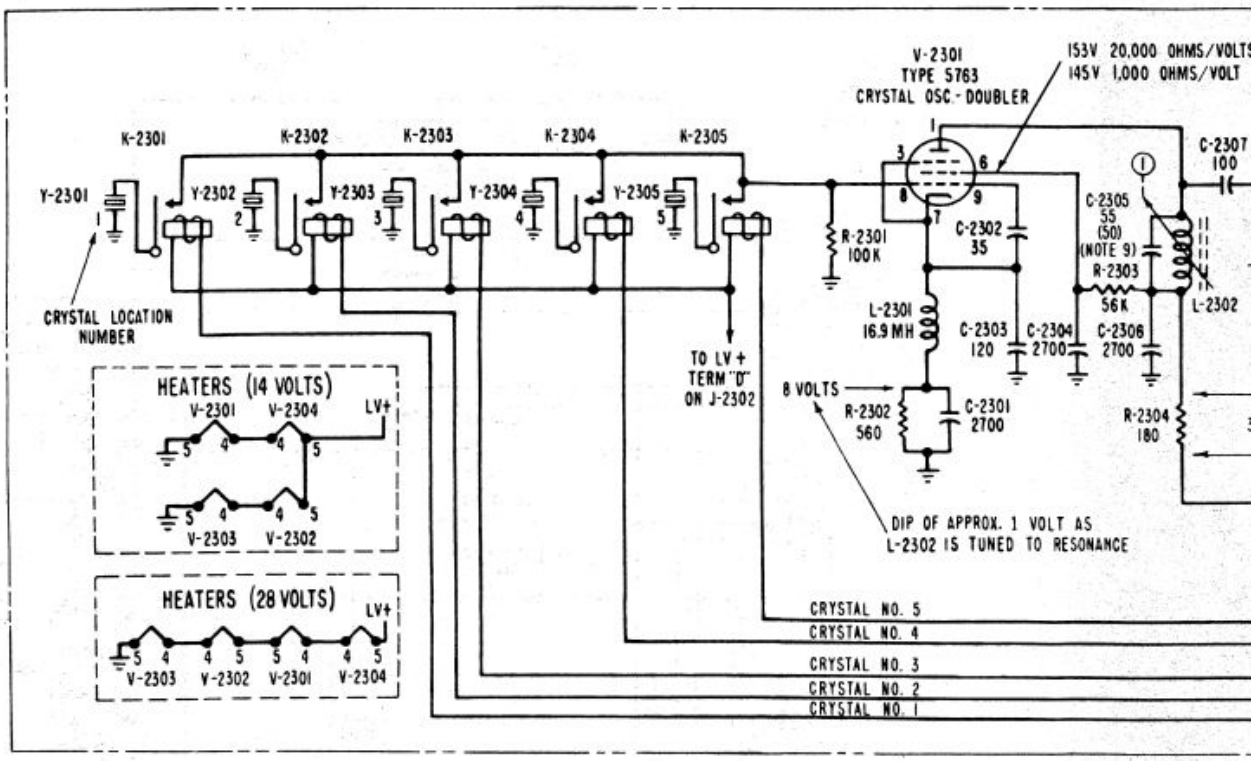

NOTES:

1. CONNECTIONS ARE SHOWN TO WIRED SIDE OF CONNECTORS.
2. CAPACITOR VALUES ARE IN MICROMICROFARADS UNLESS FOLLOWED BY "MF" - MICROFARAD.
3. RESISTOR VALUES ARE IN OHMS UNLESS FOLLOWED BY MULTIPLIER: K = 1,000; MEG = 1,000,000.
4. INDUCTOR VALUES ARE IN MICROHENRIES UNLESS FOLLOWED BY "MH" - MILLIHENRY (1,000 MICROHENRIES) OR "H" - HENRY.
5. ALL RELAYS ARE SHOWN UNENERGIZED. FOR KEYED RELAYS K-2306 AND K-2307 THIS IS THE STANDBY POSITION.
6. D-C VOLTAGE VALUES ARE APPROXIMATE AND ARE BASED ON THE FOLLOWING CONDITIONS:
   A. NEGATIVE TERMINAL OF VOLTMETER GROUNDED TO CHASSIS EXCEPT WHERE A DIFFERENT CONNECTION IS INDICATED.
   B. LV+ AT INPUT TERMINAL OF TYPE D-10A DYNAMOTOR ON RECEIVER SET AT 13.5 VOLTS FOR T-11B (14V) OR 27 VOLTS FOR T-11B (28V).
   C. VOLTMETER OHMS-PER-VOLT: EITHER 1,000 OR 20,000 EXCEPT WHERE SPECIFICALLY INDICATED.
7. DELETED BEGINNING WITH SERIAL NO. 304 OF T-11B (14V) AND SERIAL NO. 6323 OF T-11B (28V).

511507 O - 59

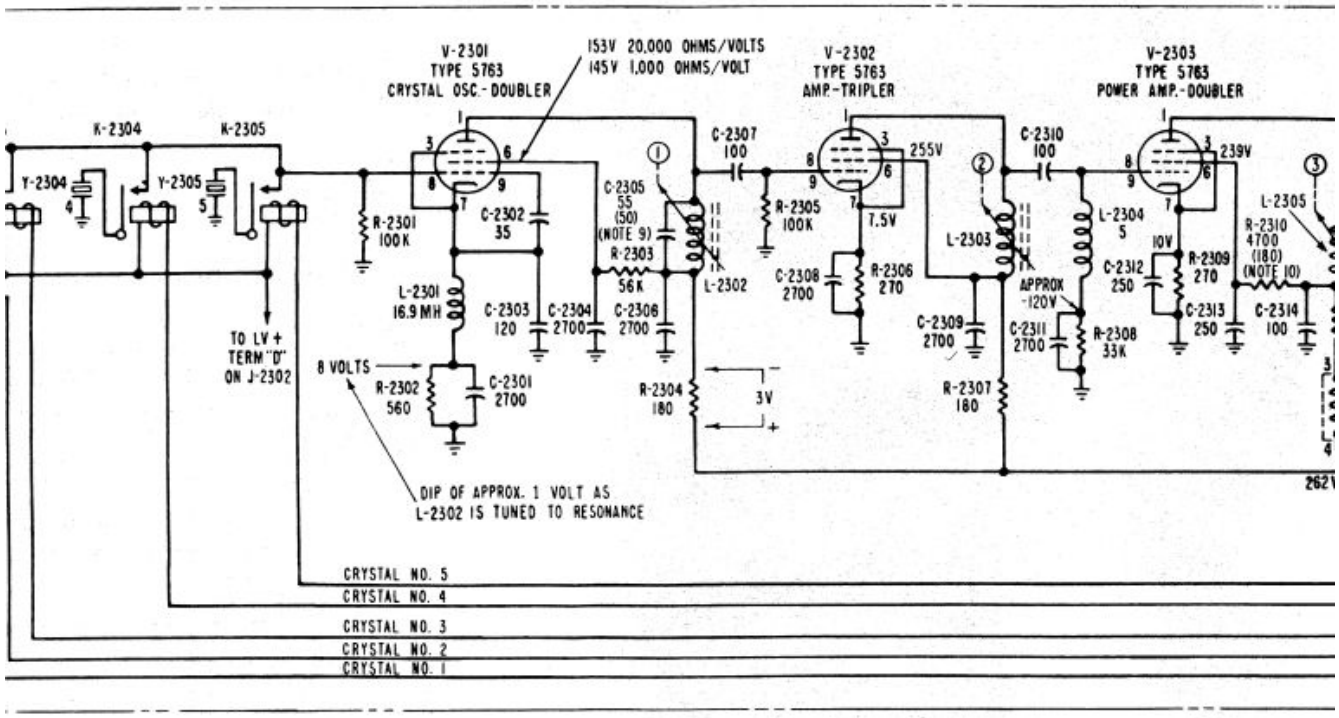

S:

CONNECTIONS ARE SHOWN TO WIRED SIDE OF CONNECTORS.

CAPACITOR VALUES ARE IN MICROMICROFARADS UNLESS FOLLOWED BY "MF" - MICROFARAD.

RESISTOR VALUES ARE IN OHMS UNLESS FOLLOWED BY MULTIPLIER: K = 1,000; MEG = 1,000,000.

INDUCTOR VALUES ARE IN MICROHENRIES UNLESS FOLLOWED BY "MH" - MILLIHENRY (1,000 MICROHENRIES) OR "H" - HENRY.

ALL RELAYS ARE SHOWN UNENERGIZED. FOR KEYED RELAYS K-2306 AND K-2307 THIS IS THE STANDBY POSITION.

D-C VOLTAGE VALUES ARE APPROXIMATE AND ARE BASED ON THE FOLLOWING CONDITIONS:

A. NEGATIVE TERMINAL OF VOLTMETER GROUNDED TO CHASSIS EXCEPT WHERE A DIFFERENT CONNECTION IS INDICATED.

B. LV+ AT INPUT TERMINAL OF TYPE D-10A DYNAMOTOR ON RECEIVER SET AT 13.5 VOLTS FOR T-11B (14V) OR 27 VOLTS FOR T-11B (28V).

C. VOLTMETER OHMS-PER-VOLT: EITHER 1,000 OR 20,000 EXCEPT WHERE SPECIFICALLY INDICATED.

DELETED BEGINNING WITH SERIAL NO. 304 OF T-11B (14V) AND SERIAL NO. 6323 OF T-11B (28V).

8. ADDED BEGINNING WITH SERIAL NO. 304 OF T-11B (14V) AND SERIAL N 6323 OF T-11B (28V).

9. VALUE SHOWN IN PARENTHESIS USED BEFORE SERIAL NO. 51 OF T-11B (14V) AND SERIAL NO. 1621 OF T-11B (28V).

10. VALUE SHOWN USED BEGINNING WITH SERIAL NO. 4615. VALUE SHOWN PARENTHESIS USED ON SERIAL NO. 4403 - 4614 ONLY OF T-11B (28V).

11. VALUE SHOWN IN PARENTHESIS USED BEFORE SERIAL NO. 304 OF T-11 AND SERIAL NO. 6323 OF T-11B (28V).

12. WIRING CONNECTION BEGINNING WITH SERIAL NO. 304 OF T-11B (14V) SERIAL NO. 6323 OF T-11B (28V) SHOWN BELOW:

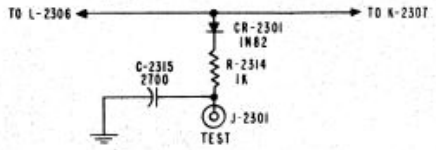

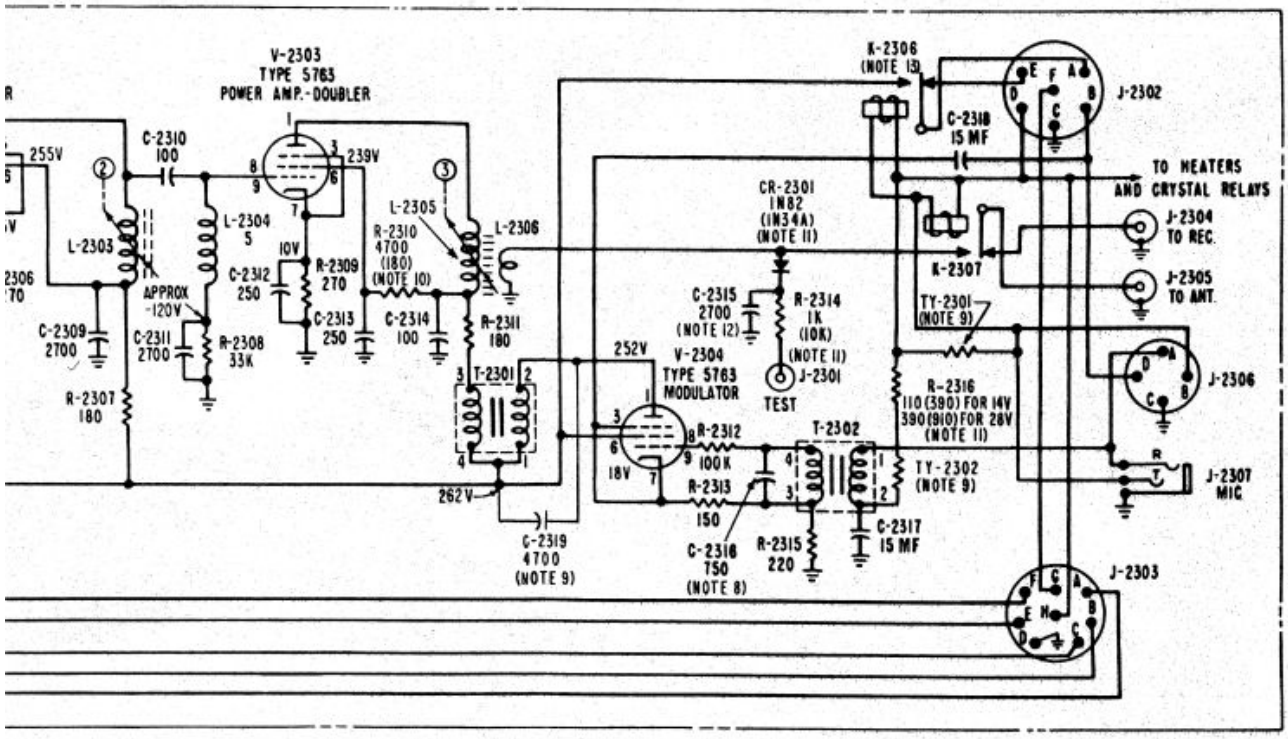

ING WITH SERIAL NO. 304 OF T-11B (14V) AND SERIAL NO. 28V).

IN PARENTHESIS USED BEFORE SERIAL NO. 51 OF D SERIAL NO. 1621 OF T-11B (28V).

USED BEGINNING WITH SERIAL NO. 4615. VALUE SHOWN IN SED ON SERIAL NO. 4403 - 4614 ONLY OF T-11B (28V).

IN PARENTHESIS USED BEFORE SERIAL NO. 304 OF T-11B (14V) . 6323 OF T-11B (28V).

CTION BEGINNING WITH SERIAL NO. 304 OF T-11B (14V) AND 3 OF T-11B (28V) SHOWN BELOW:

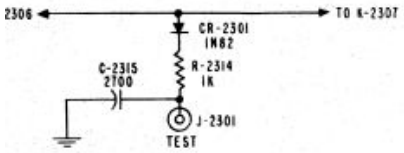

13. WIRING CONNECTION BEGINNING WITH SERIAL NO. 151 OF T-11B (14V) AND SERIAL NO. 6323 OF T-11B (28V) SHOWN BELOW:

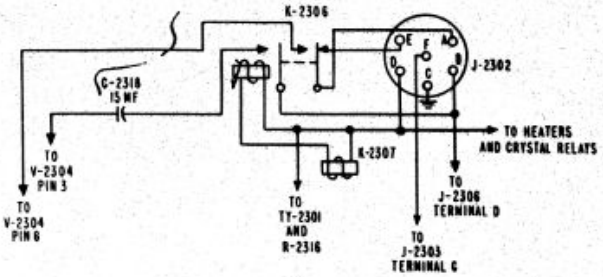

Figure 4-17. Radio Transmitter ARC Type T-11B, Schematic Diagram

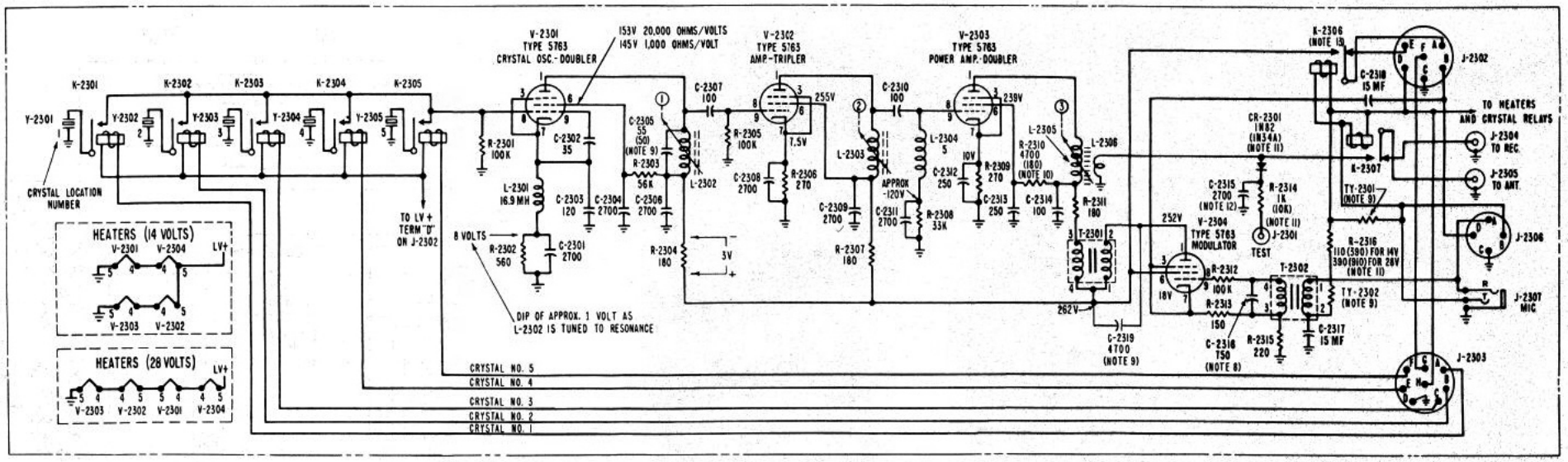

NOTES:

1. CONNECTIONS ARE SHOWN TO WIRED SIDE OF CONNECTORS.
2. CAPACITOR VALUES ARE IN MICROMICROFARADS UNLESS FOLLOWED BY "MF" - MICROFARAD.
3. RESISTOR VALUES ARE IN OHMS UNLESS FOLLOWED BY MULTIPLIER: K = 1,000; MEG = 1,000,000.
4. INDUCTOR VALUES ARE IN MICROHENRIES UNLESS FOLLOWED BY "MH" - MILLIHENRY (1,000 MICROHENRIES) OR "H" - HENRY.
5. ALL RELAYS ARE SHOWN UNENERGIZED. FOR KEYED RELAYS K-2306 AND K-2307 THIS IS THE STANDBY POSITION.
6. D-C VOLTAGE VALUES ARE APPROXIMATE AND ARE BASED ON THE FOLLOWING CONDITIONS:
   A. NEGATIVE TERMINAL OF VOLTMETER GROUNDED TO CHASSIS EXCEPT WHERE A DIFFERENT CONNECTION IS INDICATED.
   B. LV+ AT INPUT TERMINAL OF TYPE D-10A DYNAMOTOR ON RECEIVER SET AT 13.5 VOLTS FOR T-11B (14V) OR 27 VOLTS FOR T-11B (28V).
   C. VOLTMETER OHMS-PER-VOLT: EITHER 1,000 OR 20,000 EXCEPT WHERE SPECIFICALLY INDICATED.
7. DELETED BEGINNING WITH SERIAL NO. 304 OF T-11B (14V) AND SERIAL NO. 6323 OF T-11B (28V).
8. ADDED BEGINNING WITH SERIAL NO. 304 OF T-11B (14V) AND SERIAL NO. 6323 OF T-11B (28V).
9. VALUE SHOWN IN PARENTHESIS USED BEFORE SERIAL NO. 51 OF T-11B (14V) AND SERIAL NO. 1621 OF T-11B (28V).
10. VALUE SHOWN USED BEGINNING WITH SERIAL NO. 4615. VALUE SHOWN IN PARENTHESIS USED ON SERIAL NO. 4403 - 4614 ONLY OF T-11B (28V).
11. VALUE SHOWN IN PARENTHESIS USED BEFORE SERIAL NO. 304 OF T-11B (14V) AND SERIAL NO. 6323 OF T-11B (28V).
12. WIRING CONNECTION BEGINNING WITH SERIAL NO. 304 OF T-11B (14V) AND SERIAL NO. 6323 OF T-11B (28V) SHOWN BELOW:

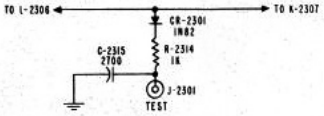

13. WIRING CONNECTION BEGINNING WITH SERIAL NO. 151 OF T-11B (14V) AND SERIAL NO. 6323 OF T-11B (28V) SHOWN BELOW:

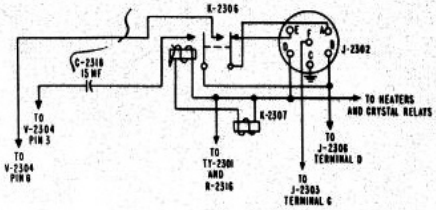

Figure 4-17. Radio Transmitter ARC Type T-11B, Schematic Diagram

511507 O - 59

NOTES:

1. CONNECTIONS ARE SHOWN TO WIRED SIDE OF CONNECTORS.
2. CAPACITOR VALUES ARE IN MICROMICROFARADS UNLESS FOLLOWED BY "MF" - MICROFARAD.
3. RESISTOR VALUES ARE IN OHMS UNLESS FOLLOWED BY MULTIPLIER: K = 1,000; MEG = 1,000,000.
4. INDUCTOR VALUES ARE IN MICROHENRIES UNLESS FOLLOWED BY "MH" - MILLIHENRY (1,000 MICROHENRIES) OR "H" - HENRY.
5. ALL RELAYS ARE SHOWN UNENERGIZED. FOR KEYED RELAYS K-401 AND K-402 THIS IS THE STANDBY POSITION.
6. D-C VOLTAGES SHOWN ARE FOR THE TRANSMIT POSITION AND ARE OBTAINED WITH A 20,000 OHMS-PER-VOLT VOLTMETER AND WITH LV+ SET AT THE NOMINAL SUPPLY VOLTAGE OF 14 VOLTS OR 28 VOLTS. ALL VOLTAGES ARE APPROXIMATE AND WILL BE A LITTLE HIGHER FOR THE 28-VOLT EQUIPMENT THAN FOR THE 14-VOLT EQUIPMENT.
7. VALUE SHOWN IN PARENTHESIS USED BEFORE SERIAL NO. 81 OF T-13 (14V) AND SERIAL NO. 1001 OF T-13 (28V).
8. ADDED BEGINNING WITH SERIAL NO. 81 OF T-13 (14V) AND SERIAL NO. 1001 OF T-13 (28V).
9. fo = OUTPUT FREQUENCY.

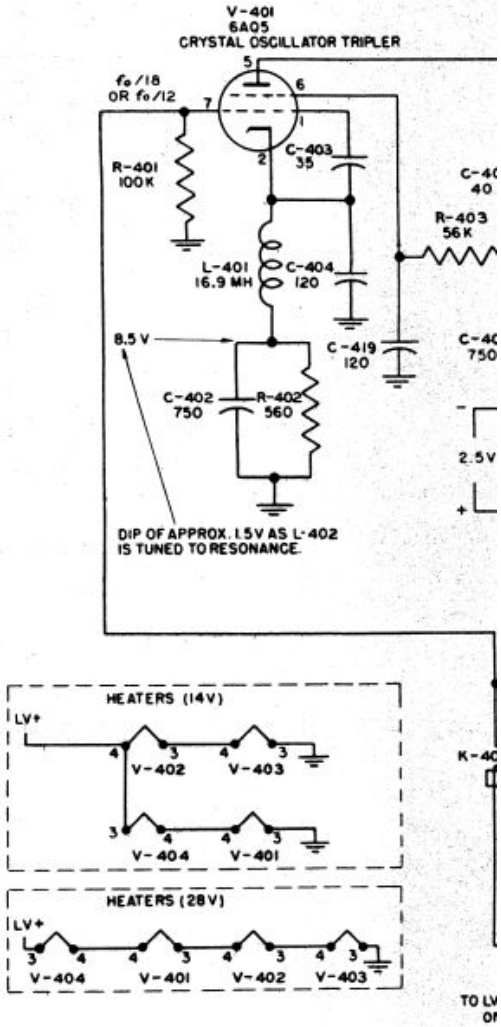

511507 O - 59

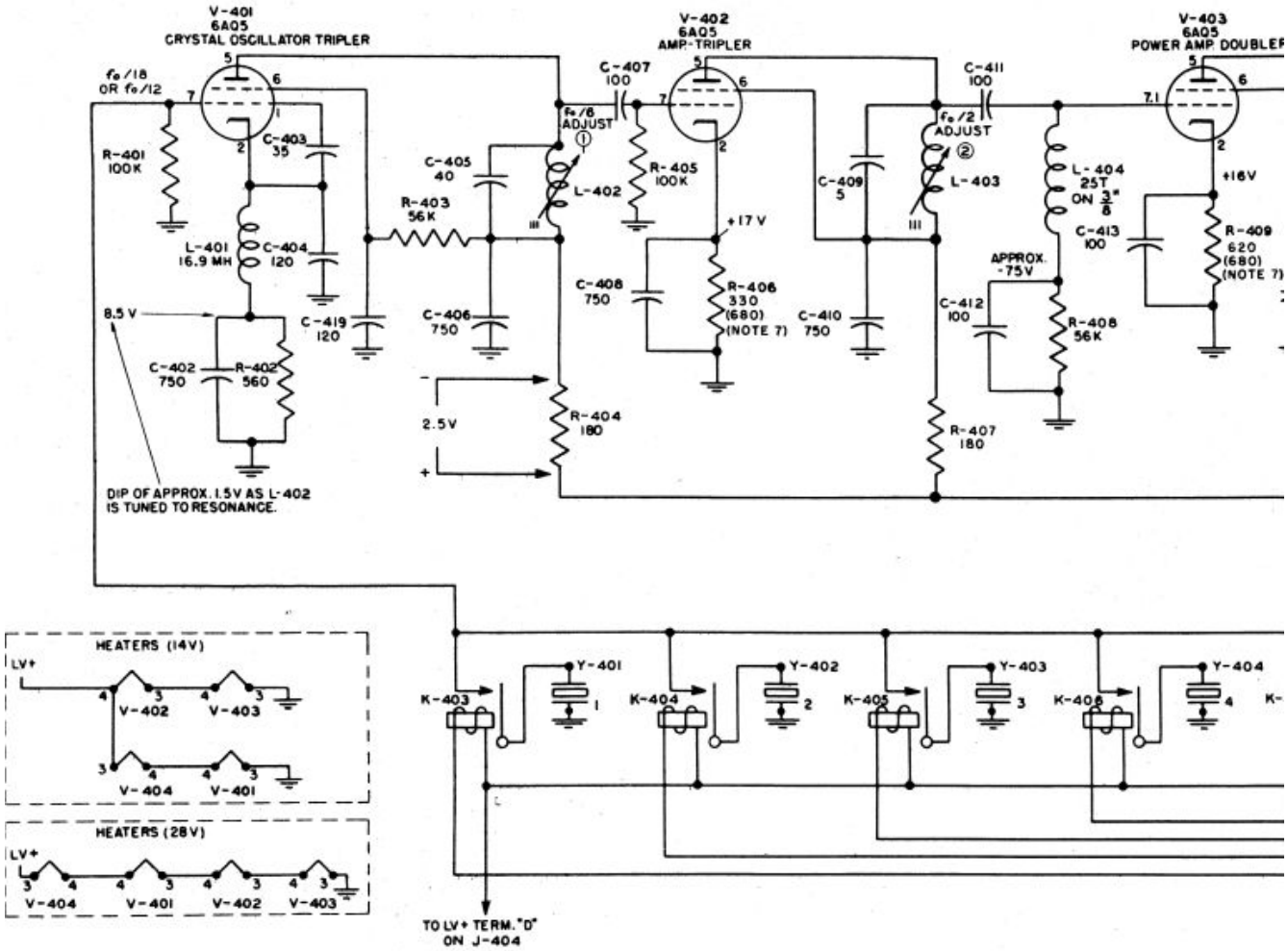
V-401
6AQ5
CRYSTAL OSCILLATOR TRIPLER
V-402
6AQ5
AMP-TRIPLER
V-403
6AQ5
POWER AMP. DOUBLER
fo/18
OR fo/12
R-401
100K
C-403
35
L-401
16.9 MH
C-404
120
C-419
120
8.5 V
C-402
750
R-402
560
DIP OF APPROX. 1.5V AS L-402
IS TUNED TO RESONANCE.
R-403
56K
C-405
40
C-406
750
2.5V
fo/6
ADJUST
L-402
R-404
180
C-407
100
R-405
100K
+17 V
C-408
750
R-406
330
(680)
(NOTE 7)
C-409
5
C-410
750
fo/2
ADJUST
L-403
R-407
180
C-411
100
L-404
25T
ON 3/8"
APPROX.
-75V
C-412
100
R-408
56K
C-413
100
+16V
R-409
620
(680)
(NOTE 7)
HEATERS (14V)
LV+
V-402
V-403
V-404
V-401
HEATERS (28V)
LV+
V-404
V-401
V-402
V-403
K-403
K-404
K-405
K-406
Y-401
Y-402
Y-403
Y-404
TO LV+ TERM. "D"
ON J-404

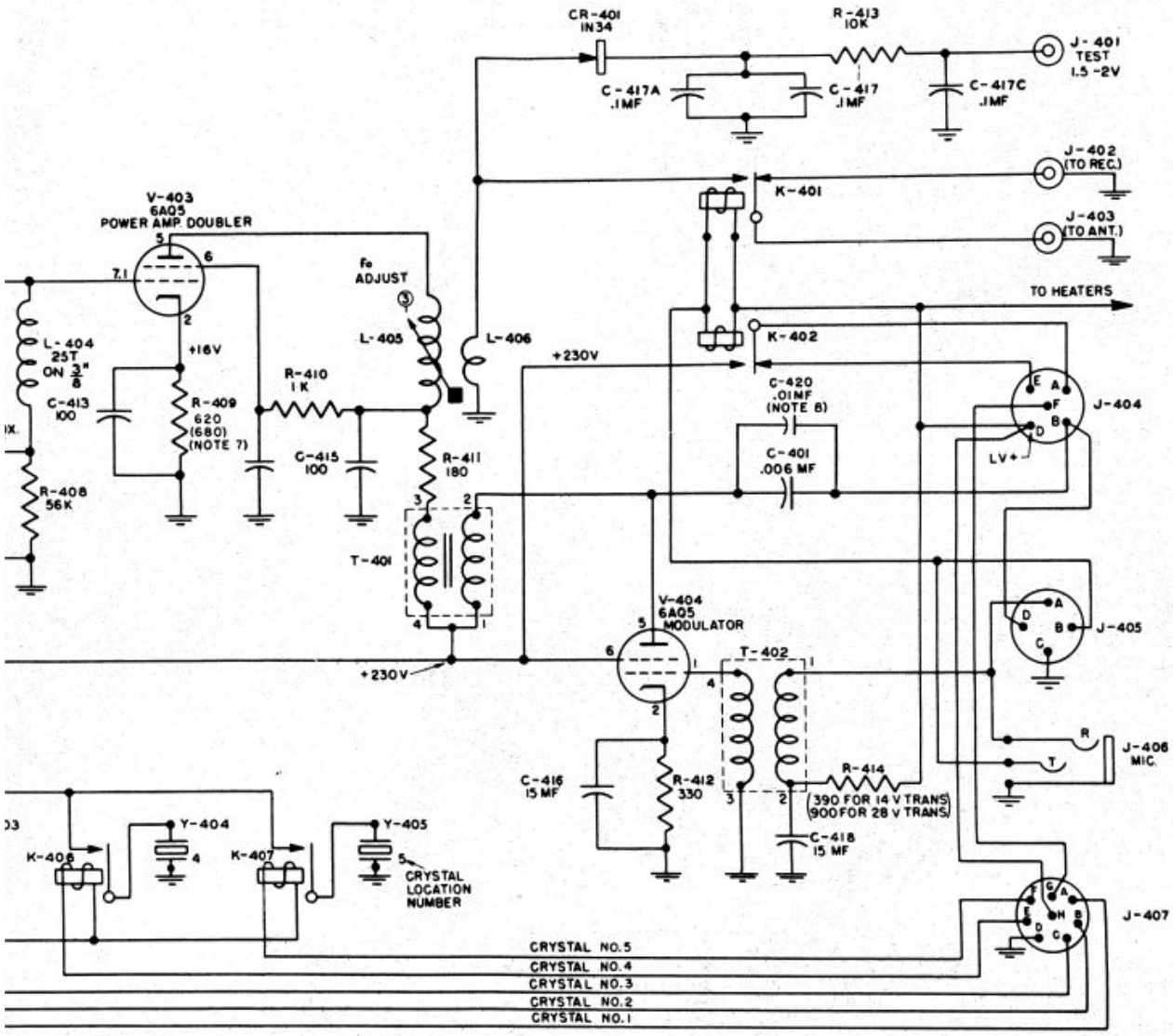

Figure 4-18. Radio Transmitter ARC Type T-13, Schematic Diagram

NOTES:

1. CONNECTIONS ARE SHOWN TO WIRED SIDE OF CONNECTORS.
2. CAPACITOR VALUES ARE IN MICROMICROFARADS UNLESS FOLLOWED BY "MF" - MICROFARAD.
3. RESISTOR VALUES ARE IN OHMS UNLESS FOLLOWED BY MULTIPLIER: K = 1,000; MEG = 1,000,000.
4. INDUCTOR VALUES ARE IN MICROHENRIES UNLESS FOLLOWED BY "MH" - MILLIHENRY (1,000 MICROHENRIES) OR "H" - HENRY.
5. ALL RELAYS ARE SHOWN UNENERGIZED. FOR KEYED RELAYS K-401 AND K-402 THIS IS THE STANDBY POSITION.
6. D-C VOLTAGES SHOWN ARE FOR THE TRANSMIT POSITION AND ARE OBTAINED WITH A 20,000 OHMS-PER-VOLT VOLTMETER AND WITH LV+ SET AT THE NOMINAL SUPPLY VOLTAGE OF 14 VOLTS OR 28 VOLTS. ALL VOLTAGES ARE APPROXIMATE AND WILL BE A LITTLE HIGHER FOR THE 28-VOLT EQUIPMENT THAN FOR THE 14-VOLT EQUIPMENT.
7. VALUE SHOWN IN PARENTHESIS USED BEFORE SERIAL NO. 81 OF T-13 (14V) AND SERIAL NO. 1001 OF T-13 (28V).
8. ADDED BEGINNING WITH SERIAL NO. 81 OF T-13 (14V) AND SERIAL NO. 1001 OF T-13 (28V).
9. fo = OUTPUT FREQUENCY.

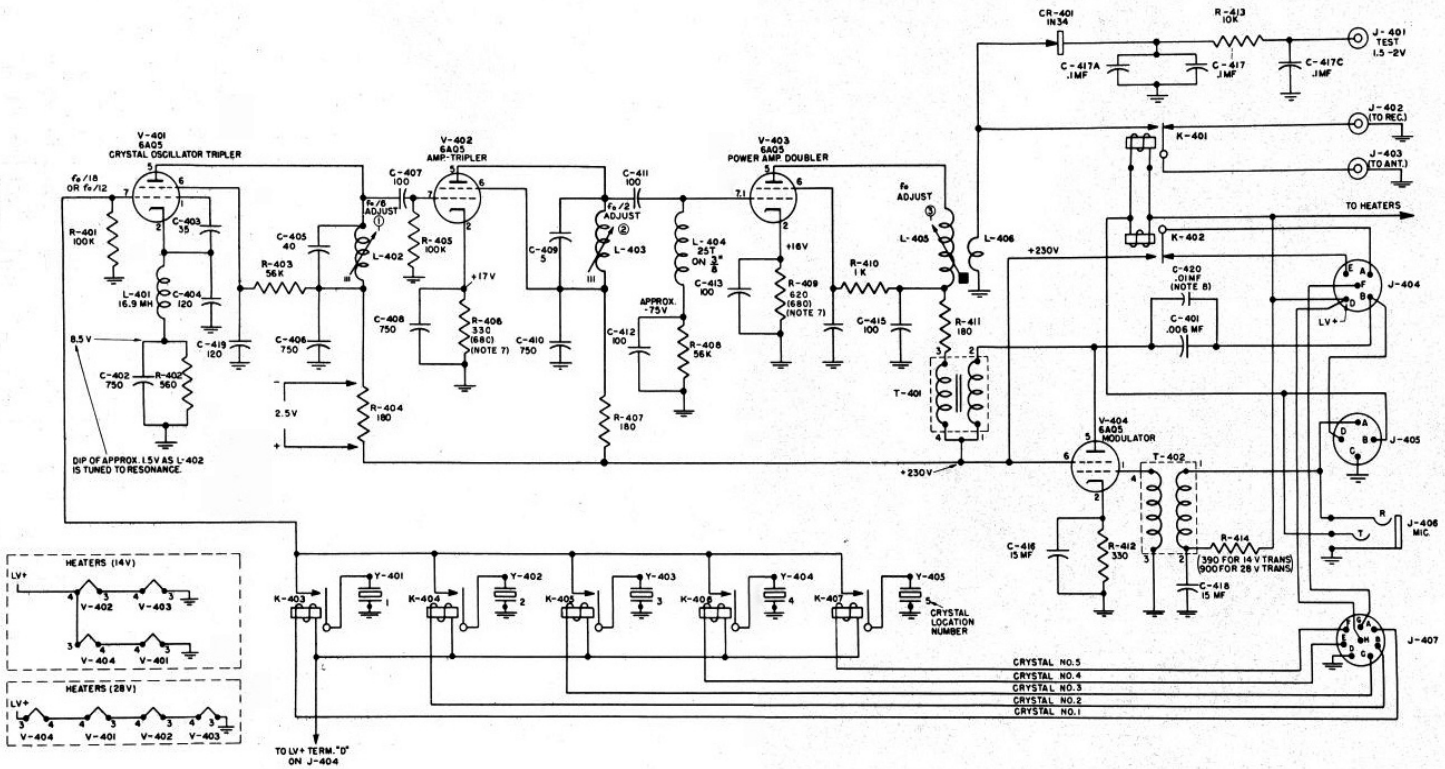

Figure 4-18. Radio Transmitter ARC Type T-13, Schematic Diagram

511507 O-59

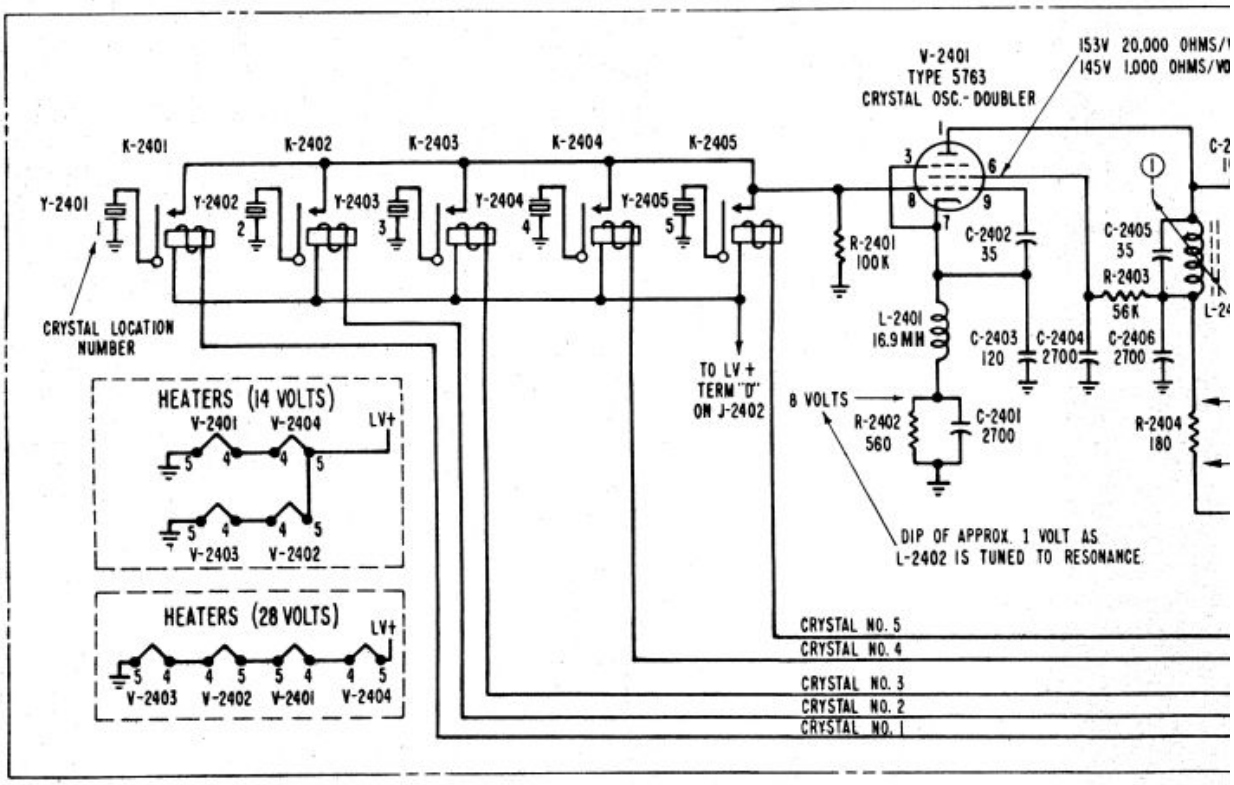

NOTES:

1. CONNECTIONS ARE SHOWN TO WIRED SIDE OF CONNECTORS.
2. CAPACITOR VALUES ARE IN MICROMICROFARADS UNLESS FOLLOWED BY "MF" - MICROFARAD.
3. RESISTOR VALUES ARE IN OHMS UNLESS FOLLOWED BY MULTIPLIER: K = 1,000; MEG = 1,000,000.
4. INDUCTOR VALUES ARE IN MICROHENRIES UNLESS FOLLOWED BY "MH" - MILLIHENRY (1,000 MICROHENRIES) OR "H" - HENRY.
5. ALL RELAYS ARE SHOWN UNENERGIZED. FOR KEYED RELAYS K-2406 AND K-2407 THIS IS THE STANDBY POSITION.
6. D-C VOLTAGE VALUES ARE APPROXIMATE AND ARE BASED ON THE FOLLOWING CONDITIONS:
   A. NEGATIVE TERMINAL OF VOLTMETER GROUNDED TO CHASSIS EXCEPT WHERE A DIFFERENT CONNECTION IS INDICATED.
   B. LV+ AT INPUT TERMINAL OF TYPE D-10A DYNAMOTOR ON RECEIVER SET AT 13.5 VOLTS FOR T-13A (14V) OR 27 VOLTS FOR T-13A (28V).
   C. VOLTMETER OHMS-PER-VOLT: EITHER 1,000 OR 20,000 EXCEPT WHERE SPECIFICALLY INDICATED.
7. VALUES SHOWN IN PARENTHESIS USED BEGINNING WITH SERIAL NO. 1001 OF T-13A (14V) AND SERIAL NO. 701 OF T-13A (28V).

511507 O - 59

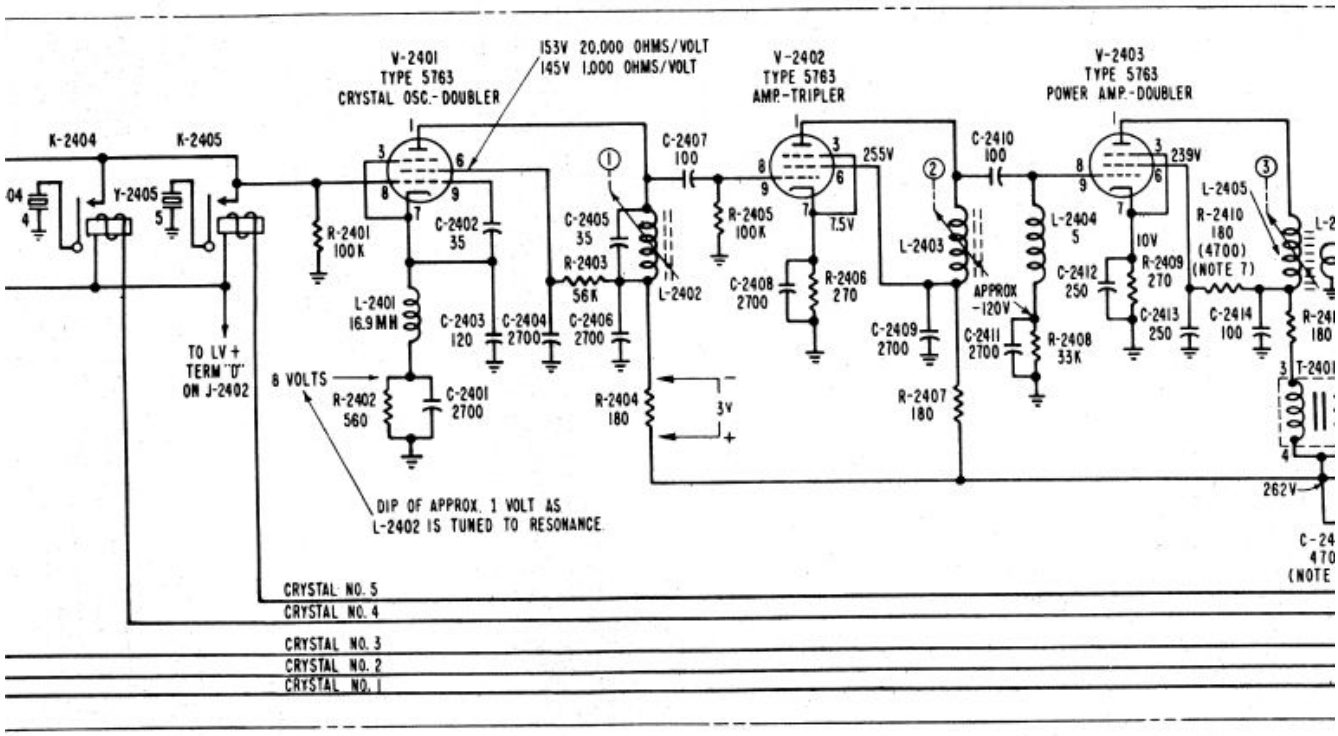

ONNECTIONS ARE SHOWN TO WIRED SIDE OF CONNECTORS.

APACITOR VALUES ARE IN MICROMICROFARADS UNLESS FOLLOWED Y "MF" - MICROFARAD.

ESISTOR VALUES ARE IN OHMS UNLESS FOLLOWED BY MULTIPLIER: = 1,000; MEG = 1,000,000.

IDUCTOR VALUES ARE IN MICROHENRIES UNLESS FOLLOWED BY MH" - MILLIHENRY (1,000 MICROHENRIES) OR "H" - HENRY.

LL RELAYS ARE SHOWN UNENERGIZED. FOR KEYED RELAYS K-2406 AND -2407 THIS IS THE STANDBY POSITION.

-C VOLTAGE VALUES ARE APPROXIMATE AND ARE BASED ON THE OLLOWING CONDITIONS:

A. NEGATIVE TERMINAL OF VOLTMETER GROUNDED TO CHASSIS EXCEPT WHERE A DIFFERENT CONNECTION IS INDICATED.

B. LV+ AT INPUT TERMINAL OF TYPE D-10A DYNAMOTOR ON RECEIVER SET AT 13.5 VOLTS FOR T-13A (14V) OR 27 VOLTS FOR T-13A (28V).

C. VOLTMETER OHMS-PER-VOLT: EITHER 1,000 OR 20,000 EXCEPT WHERE SPECIFICALLY INDICATED.

ALUES SHOWN IN PARENTHESIS USED BEGINNING WITH SERIAL NO. 1001 F T-13A (14V) AND SERIAL NO. 701 OF T-13A (28V).

8. ADDED BEGINNING WITH SERIAL NO. 1001 OF T-13A (14V) AND SERIAL NO. 701 OF T-13A (28V).

9. DELETED BEGINNING WITH SERIAL NO. 214 OF T-13A (14V) AND SERIAL NO. 5902 OF T-13A (28V).

10. ADDED BEGINNING WITH SERIAL NO. 214 OF T-13A (14V) AND SERIAL NO. 5902 OF T-13A (28V).

11. VALUE SHOWN IN PARENTHESIS USED BEFORE SERIAL NO. 214 OF T-13A (1 AND SERIAL NO. 5902 OF T-13A (28V).

12. WIRING CONNECTION BEGINNING WITH SERIAL NO. 214 OF T-13A (14V) AND SERIAL NO. 5902 OF T-13A (28V) SHOWN BELOW:

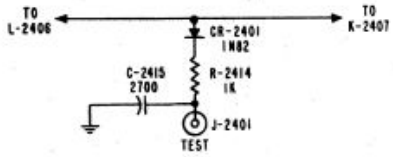

Figure 4-19. Radio Transmitter

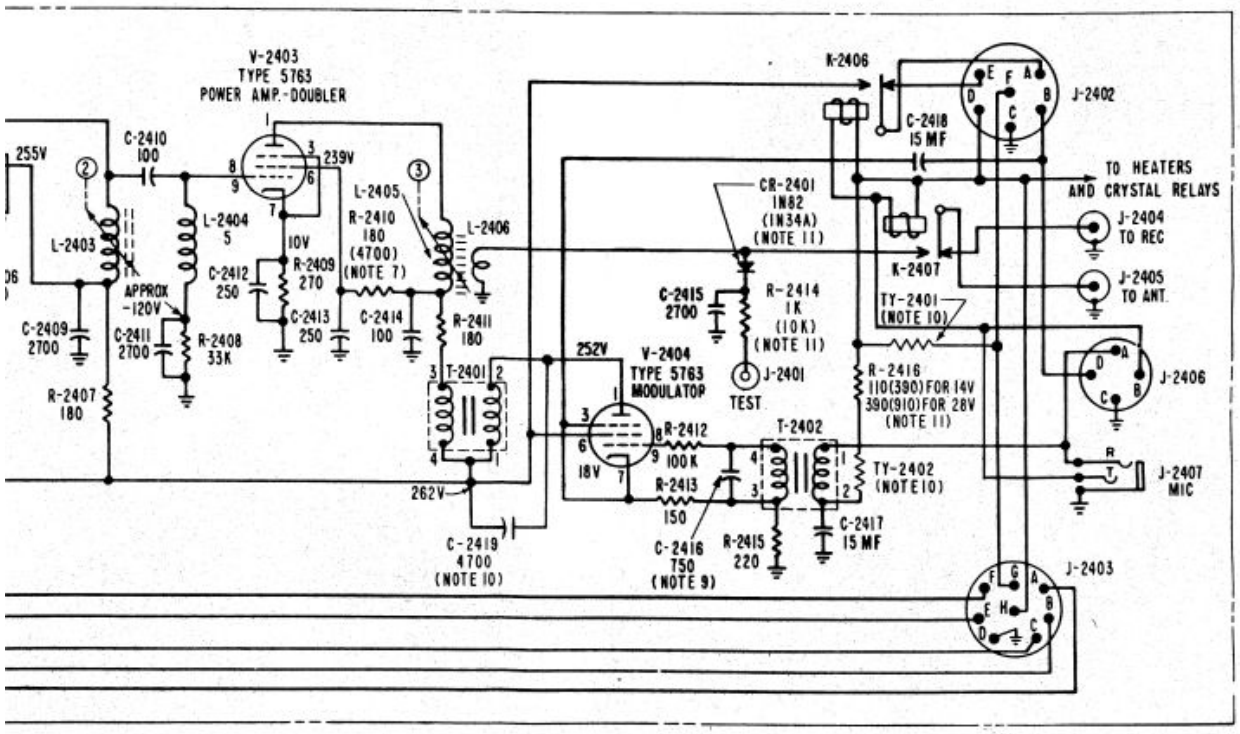

G WITH SERIAL NO. 1001 OF T-13A (14V) AND SERIAL
A (28V).

NING WITH SERIAL NO. 214 OF T-13A (14V) AND SERIAL
A (28V).

G WITH SERIAL NO. 214 OF T-13A (14V) AND SERIAL
A (28V).

PARENTHESIS USED BEFORE SERIAL NO. 214 OF T-13A (14V)
5902 OF T-13A (28V).

TION BEGINNING WITH SERIAL NO. 214 OF T-13A (14V) AND
OF T-13A (28V) SHOWN BELOW:

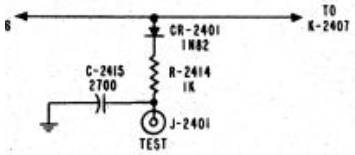

13. WIRING CONNECTION BEGINNING WITH SERIAL NO. 214 OF T-13A (14V) AND SERIAL NO. 5902 OF T-13A (28V).

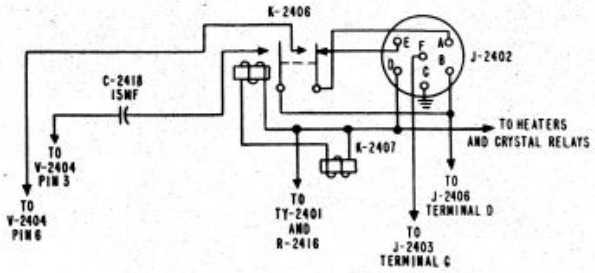

Figure 4-19. Radio Transmitter ARC Type T-13A, Schematic Diagram

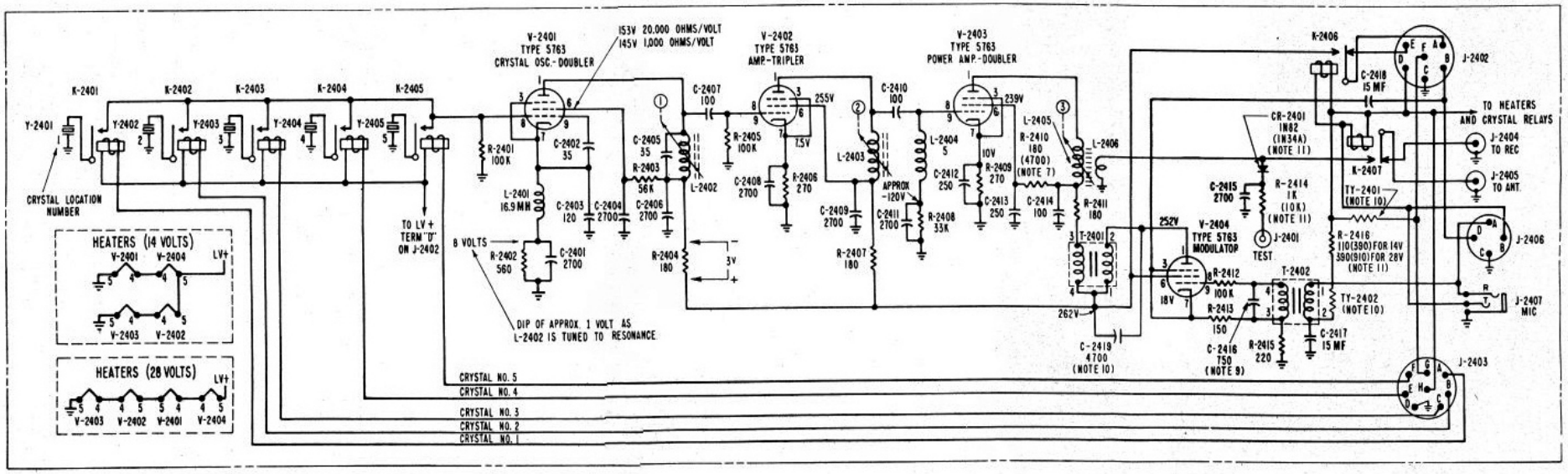

NOTES:

1. CONNECTIONS ARE SHOWN TO WIRED SIDE OF CONNECTORS.
2. CAPACITOR VALUES ARE IN MICROMICROFARADS UNLESS FOLLOWED BY "MF" - MICROFARAD.
3. RESISTOR VALUES ARE IN OHMS UNLESS FOLLOWED BY MULTIPLIER: K = 1,000; MEG = 1,000,000.
4. INDUCTOR VALUES ARE IN MICROHENRIES UNLESS FOLLOWED BY "MH" - MILLIHENRY (1,000 MICROHENRIES) OR "H" - HENRY.
5. ALL RELAYS ARE SHOWN UNENERGIZED. FOR KEYED RELAYS K-2406 AND K-2407 THIS IS THE STANDBY POSITION.
6. D-C VOLTAGE VALUES ARE APPROXIMATE AND ARE BASED ON THE FOLLOWING CONDITIONS:
   A. NEGATIVE TERMINAL OF VOLTMETER GROUNDED TO CHASSIS EXCEPT WHERE A DIFFERENT CONNECTION IS INDICATED.
   B. LV+ AT INPUT TERMINAL OF TYPE D-10A DYNAMOTOR ON RECEIVER SET AT 13.5 VOLTS FOR T-13A (14V) OR 27 VOLTS FOR T-13A ((28V).
   C. VOLTMETER OHMS-PER-VOLT: EITHER 1,000 OR 20,000 EXCEPT WHERE SPECIFICALLY INDICATED.
7. VALUES SHOWN IN PARENTHESIS USED BEGINNING WITH SERIAL NO. 11001 OF T-13A (14V) AND SERIAL NO. 701 OF T-13A (28V).
8. ADDED BEGINNING WITH SERIAL NO. 1001 OF T-13A (4V) AND SERIAL NO. 701 OF T-13A (28V).
9. DELETED BEGINNING WITH SERIAL NO. 214 OF T-13A (14V) AND SERIAL NO. 5902 OF T-13A (28V).
10. ADDED BEGINNING WITH SERIAL NO. 214 OF T-13A (1V) AND SERIAL NO. 5902 OF T-13A (28V).
11. VALUE SHOWN IN PARENTHESIS USED BEFORE SERIAL NO 214 OF T-13A (14V) AND SERIAL NO. 5902 OF T-13A (28V).
12. WIRING CONNECTION BEGINNING WITH SERIAL NO. 14 OF T-13A (14V) AND SERIAL NO. 5902 OF T-13A (28V) SHOWN BELOW:

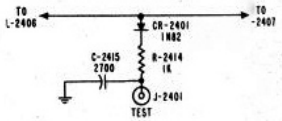

13. WIRING CONNECTION BEGINNING WITH SERIAL NO. 214 OF T-13A (14V) AND SERIAL NO. 5902 OF T-13A (28V).

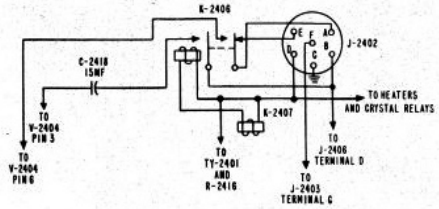

Figure 4-19 Radio Transmitter ARC Type T-13A, Schematic Diagram

515507 O - 59

NOTES:

1. CAPACITOR VALUES ARE IN MICROMICROFARADS UNLESS FOLLOWED BY "MF" - MICROFARAD.

2. RESISTOR VALUES ARE IN OHMS UNLESS FOLLOWED BY MULTIPLIER: K = 1,000; MEG = 1,000,000.

3. INDUCTOR VALUES ARE IN MICROHENRIES UNLESS FOLLOWED BY "MH" - MILLIHENRY (1,000 MICROHENRIES) OR "H" - HENRY.

4. D-C VOLTAGE VALUES ARE APPROXIMATE AND ARE BASED ON THE FOLLOWING CONDITIONS:

   A. NEGATIVE TERMINAL OF VOLTMETER GROUNDED TO CHASSIS, EXCEPT WHERE A DIFFERENT CONDITION IS INDICATED.

   B. LV+ AT TERMINAL "A" OF J4203 SET AT 27.5 VOLTS BY ADJUSTMENT OF LV+ SOURCE.

   C. VOLTMETER OHMS-PER-VOLT: EITHER 1,000 OR 20,000 EXCEPT WHERE SPECIFICALLY INDICATED.

5. ALL RELAYS ARE SHOWN UNENERGIZED. FOR KEYED RELAYS K4211 AND K4212 THIS IS THE STANDBY POSITION.

6. VALUE NORMALLY 68 OHMS. MAY BE CHANGED TO 47 OR 82 OHMS AT FINAL ADJUSTMENT IF NECESSARY TO OBTAIN SPECIFIED MIXER CRYSTAL CURRENT WITH AVERAGE 6201 OSCILLATOR TUBE.

511507 O - 59

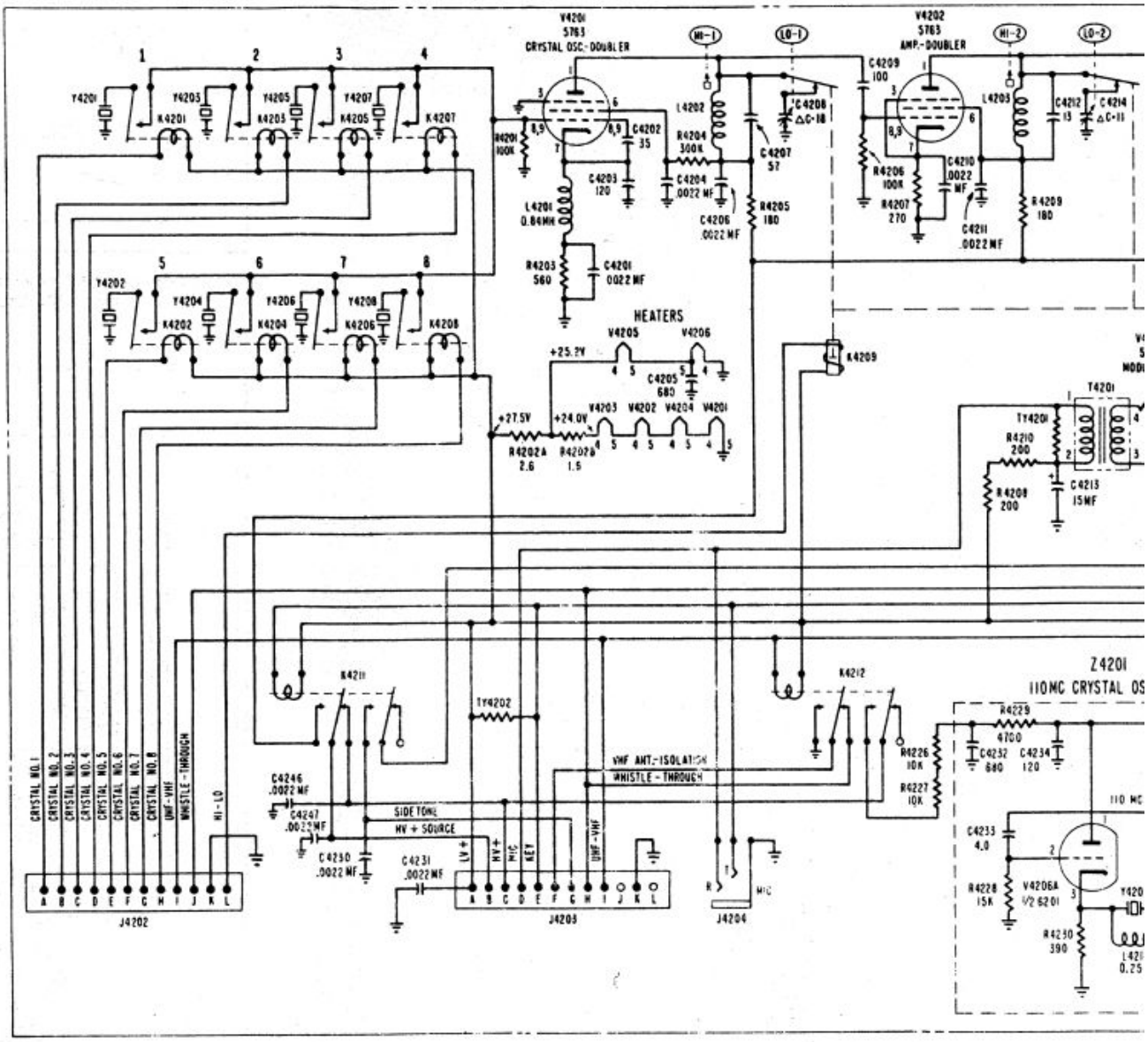
V4201
5763
CRYSTAL OSC-DOUBLER
V4202
5763
AMP.-DOUBLER
HI-1
LO-1
HI-2
LO-2
HEATERS
+25.2V
+27.5V
+24.0V
Z4201
110MC CRYSTAL OS
VHF ANT.-ISOLATION
WHISTLE-THROUGH
SIDE TONE
HV + SOURCE
CRYSTAL NO. 1
CRYSTAL NO. 2
CRYSTAL NO. 3
CRYSTAL NO. 4
CRYSTAL NO. 5
CRYSTAL NO. 6
CRYSTAL NO. 7
CRYSTAL NO. 8
UHF-VHF
WHISTLE-THROUGH
HI-LO
J4202
J4203
J4204
KEY LEFT
KEY RIGHT
J4202
OUTSIDE
VIEW
J4203
OUTSIDE
VIEW

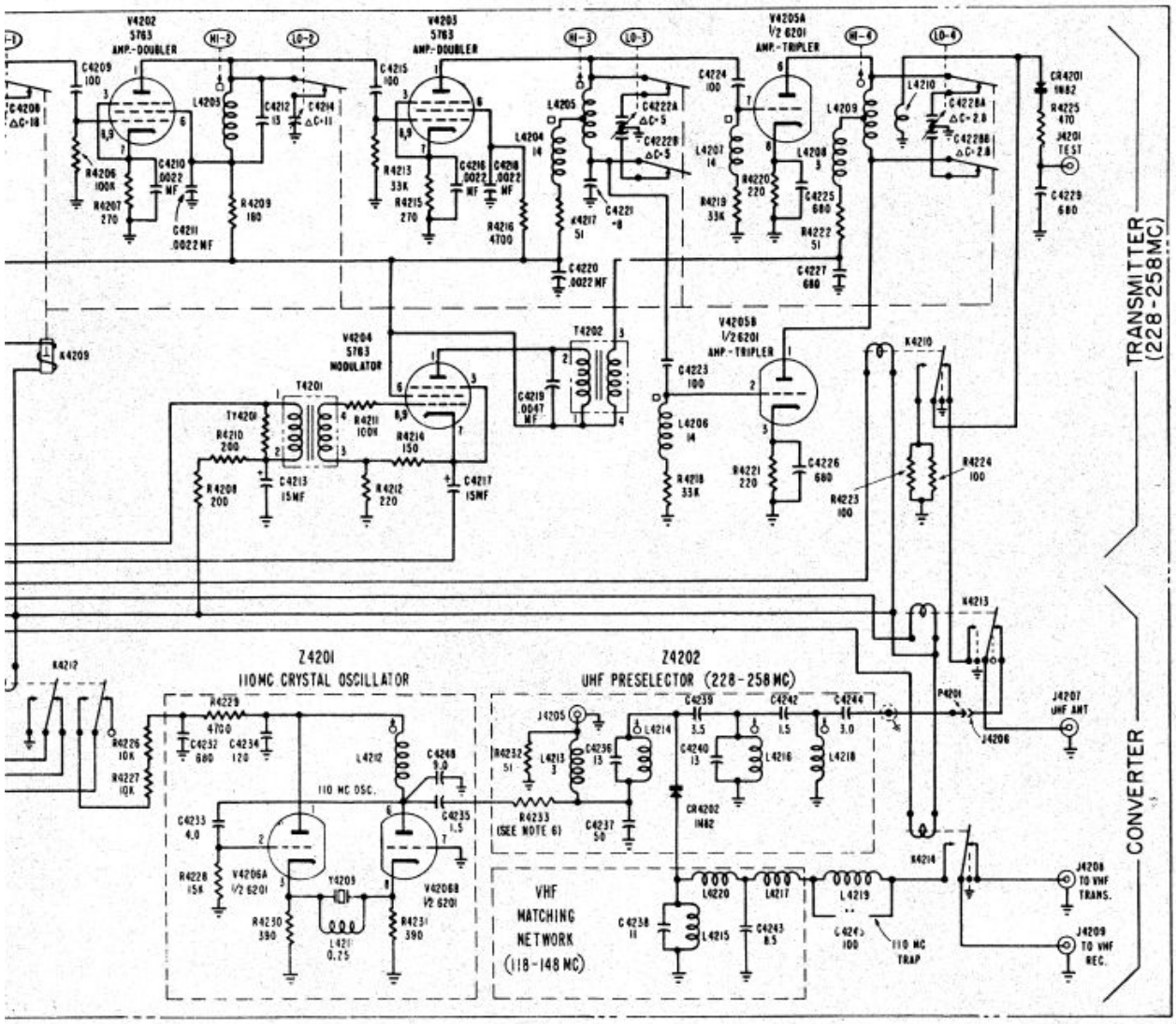

Figure 4-20. UHF Transverter ARC Type TV-10, Schematic Diagram

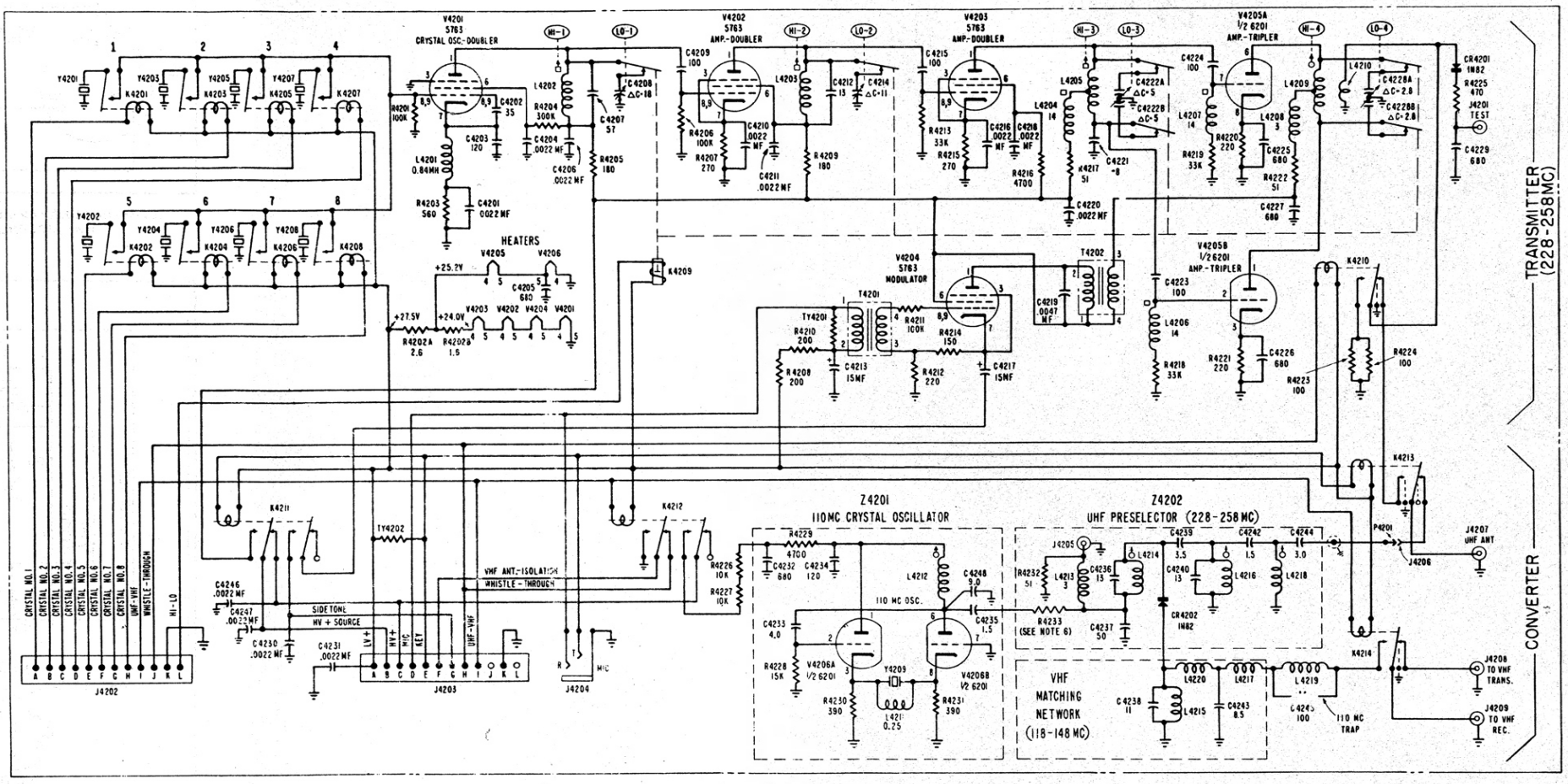

Figure 4-20. UHF Transverter ARC Type TV-10, Schematic Diagram

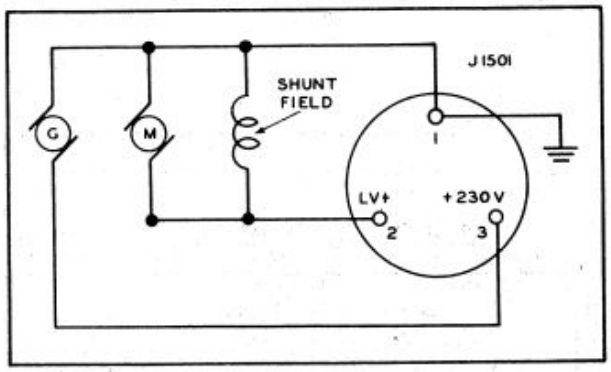

Figure 4-21. Dynamotor ARC Type D-10, Schematic Diagram

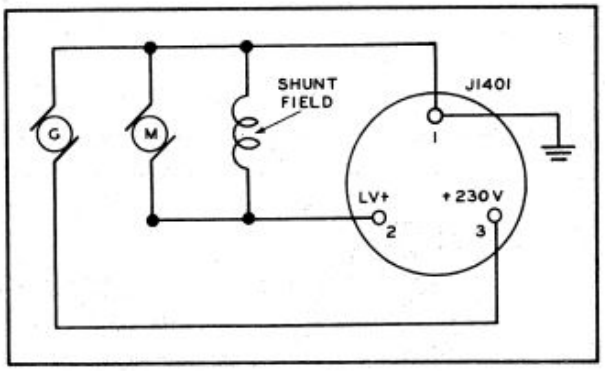

Figure 4-22. Dynamotor ARC Type D-10A, Schematic Diagram

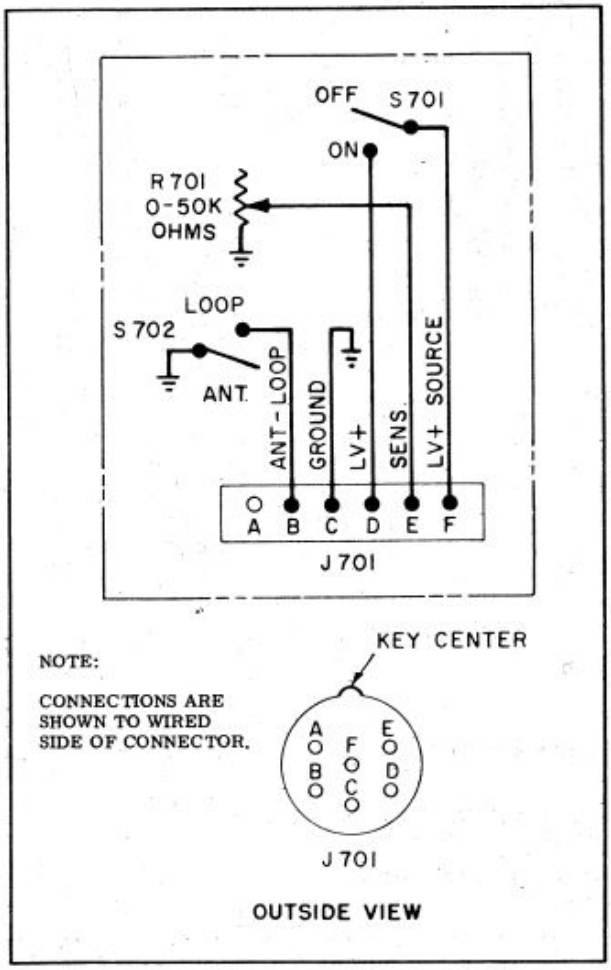

Figure 4-23. Control Unit ARC Type C-16, Schematic Diagram

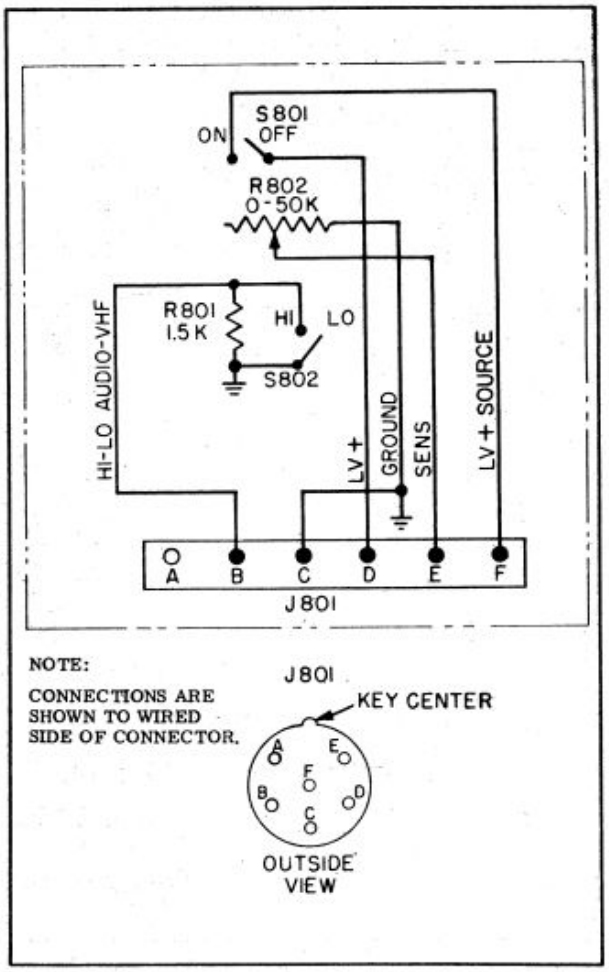

Figure 4-24. Control Unit ARC Type C-17, Schematic Diagram

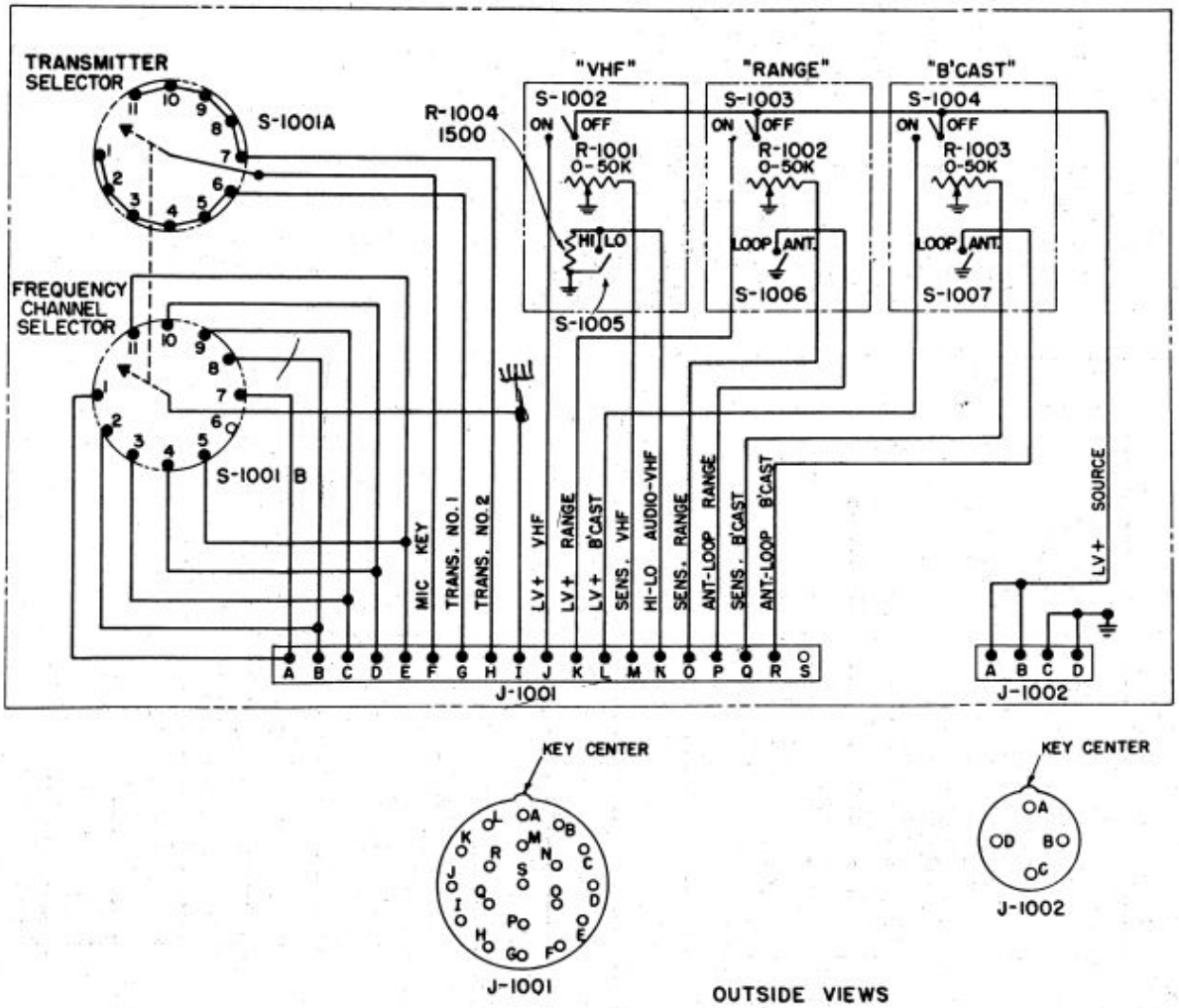

NOTES:

1. CONNECTIONS ARE SHOWN TO WIRED SIDE OF CONNECTORS.
2. RESISTOR VALUES ARE IN OHMS UNLESS FOLLOWED BY MULTIPLIER: K = 1,000; MEG = 1,000,000.
3. ROTARY SWITCH SECTIONS ARE SHOWN AS VIEWED FROM KNOB END OF SWITCH.

Figure 4-25. Control Unit ARC Type C-24, Schematic Diagram

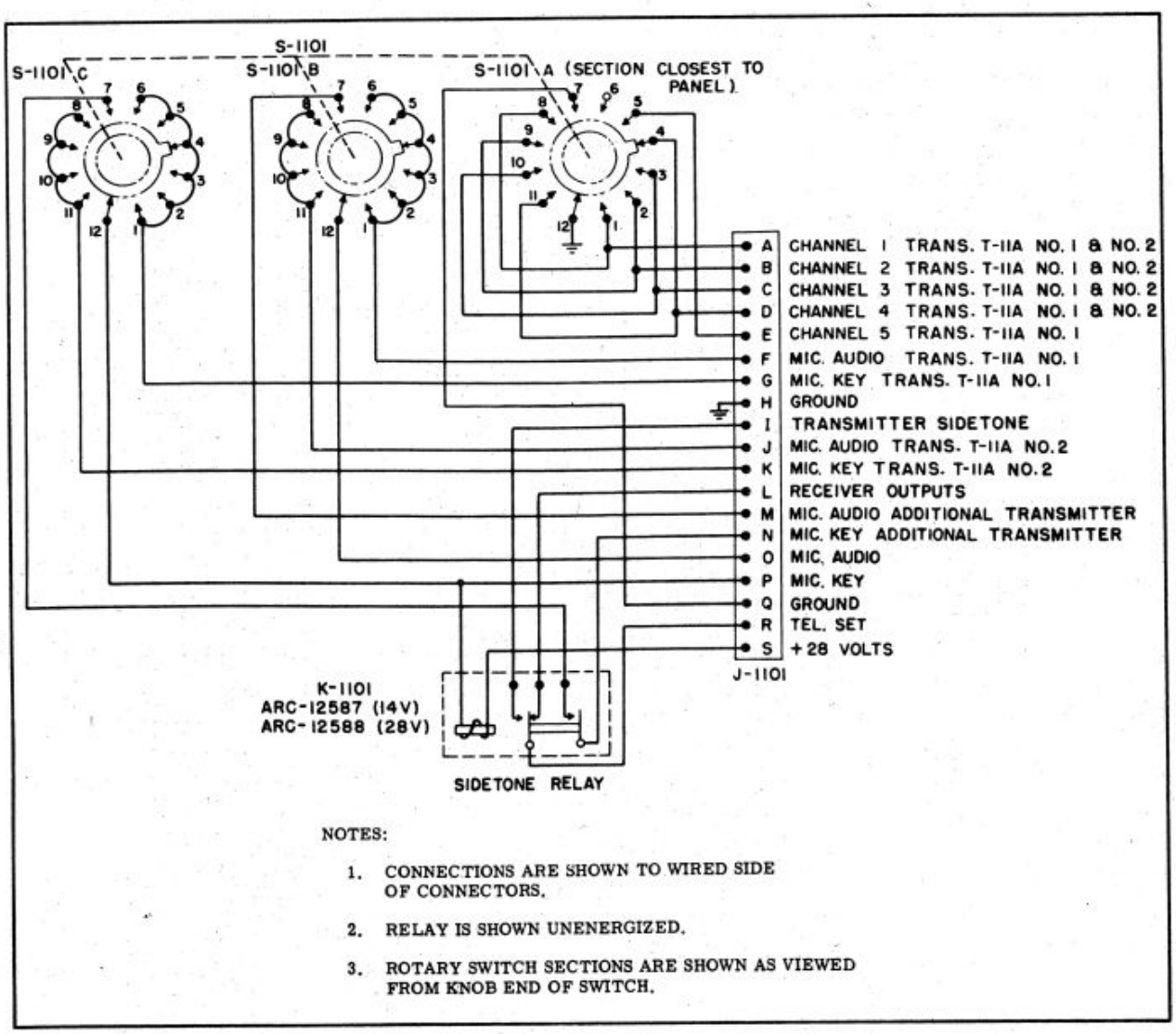

NOTES:

1. CONNECTIONS ARE SHOWN TO WIRED SIDE OF CONNECTORS.
2. RELAY IS SHOWN UNENERGIZED.
3. ROTARY SWITCH SECTIONS ARE SHOWN AS VIEWED FROM KNOB END OF SWITCH.

Figure 4-26. Control Unit ARC Type C-25, Schematic Diagram

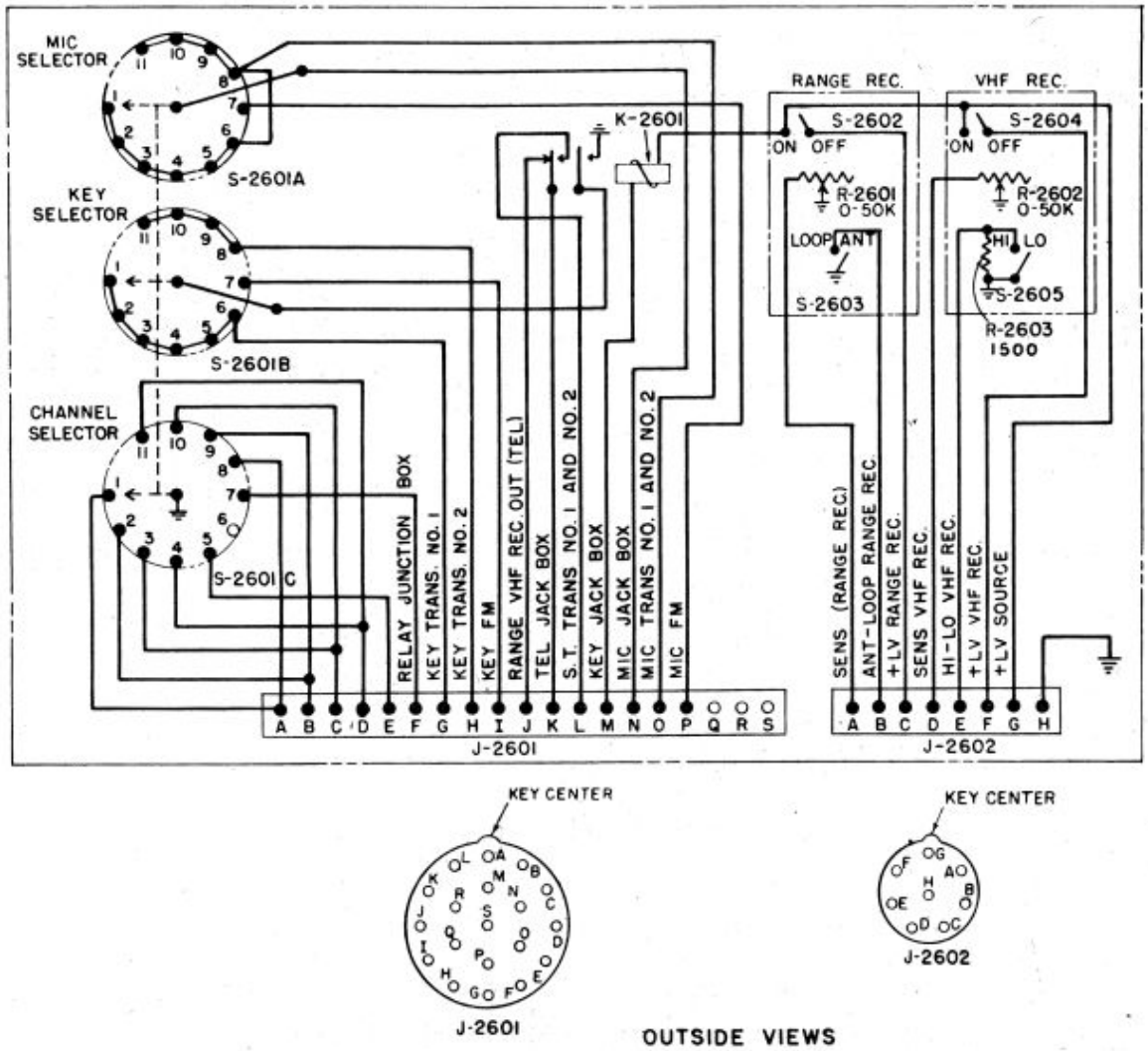

NOTES:

1. CONNECTIONS ARE SHOWN TO WIRED SIDE OF CONNECTORS.
2. RESISTOR VALUES ARE IN OHMS UNLESS FOLLOWED BY MULTIPLIER: K = 1,000; MEG = 1,000,000.
3. RELAY IS SHOWN UNENERGIZED.
4. ROTARY SWITCH SECTIONS ARE SHOWN AS VIEWED FROM KNOB END OF SWITCH.

Figure 4-27. Control Unit ARC Type C-36, Schematic Diagram

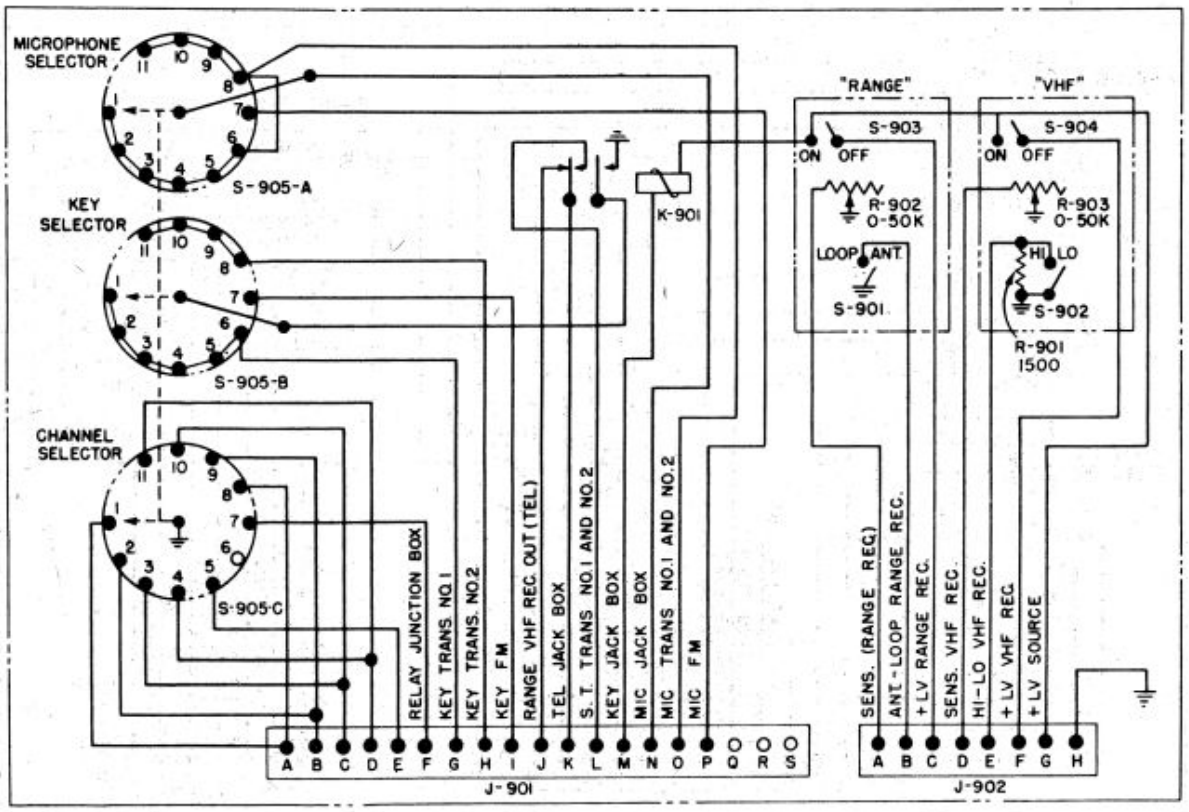

NOTES:

1. CONNECTIONS ARE SHOWN TO WIRED SIDE OF CONNECTORS.
2. RESISTOR VALUES ARE IN OHMS UNLESS FOLLOWED BY MULTIPLIER: K = 1,000; MEG = 1,000,000.
3. RELAY IS SHOWN UNENERGIZED.
4. ROTARY SWITCH SECTIONS ARE SHOWN AS VIEWED FROM KNOB END OF SWITCH.

Figure 4-28. Control Unit ARC Type C-37, Schematic Diagram

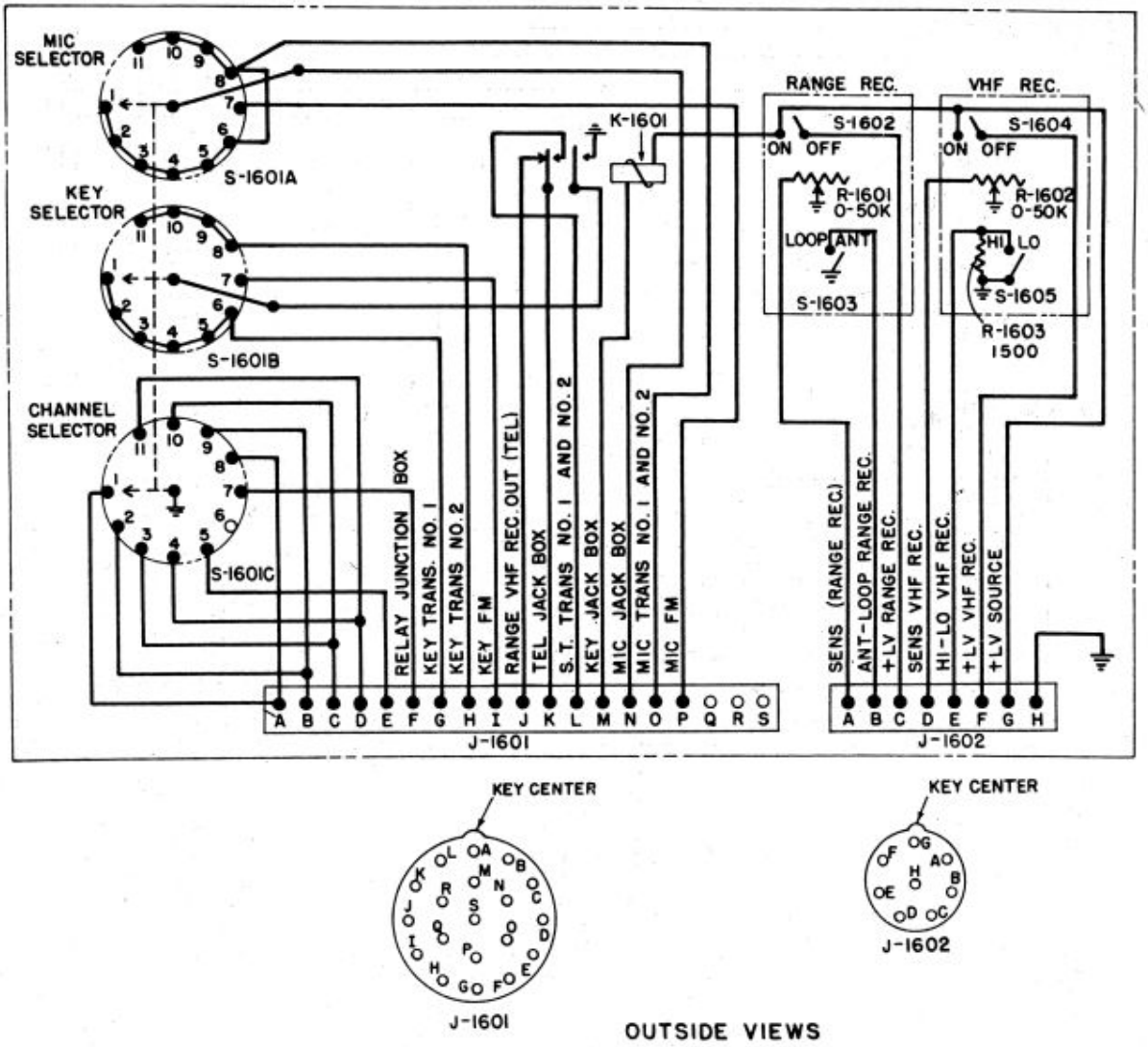

NOTES:

1. CONNECTIONS ARE SHOWN TO WIRED SIDE OF CONNECTORS.
2. RESISTOR VALUES ARE IN OHMS UNLESS FOLLOWED BY MULTIPLIER: K = 1,000; MEG = 1,000,000.
3. RELAY IS SHOWN UNENERGIZED.
4. ROTARY SWITCH SECTIONS ARE SHOWN AS VIEWED FROM KNOB END OF SWITCH.

Figure 4-29. Control Unit ARC Type C-38, Schematic Diagram

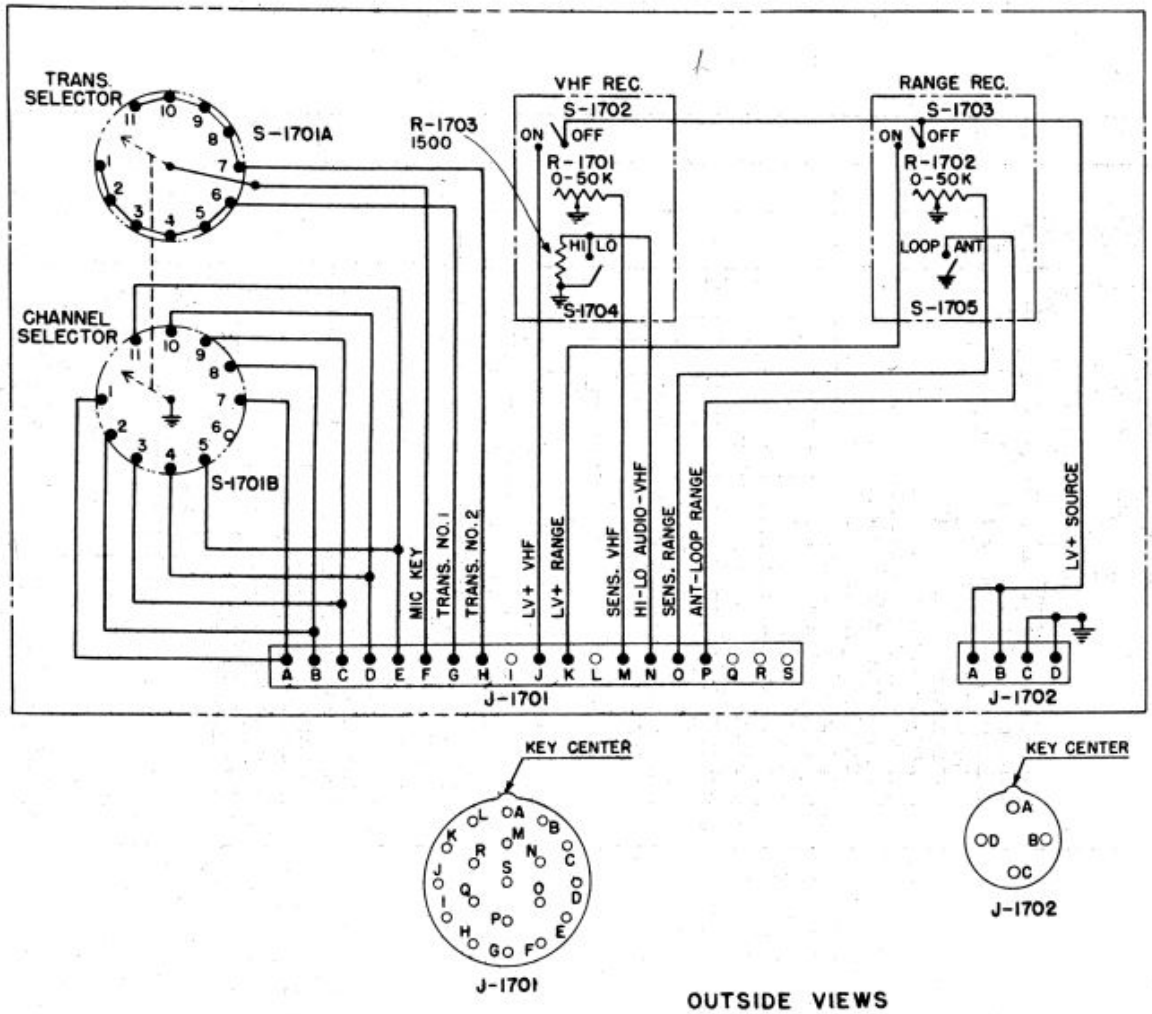

NOTES:

1. CONNECTIONS ARE SHOWN TO WIRED SIDE OF CONNECTORS.
2. RESISTOR VALUES ARE IN OHMS UNLESS FOLLOWED BY MULTIPLIER: K = 1,000; MEG = 1,000,000.
3. ROTARY SWITCH SECTIONS ARE SHOWN AS VIEWED FROM KNOB END OF SWITCH.

Figure 4-30. Control Unit ARC Type C-39, Schematic Diagram

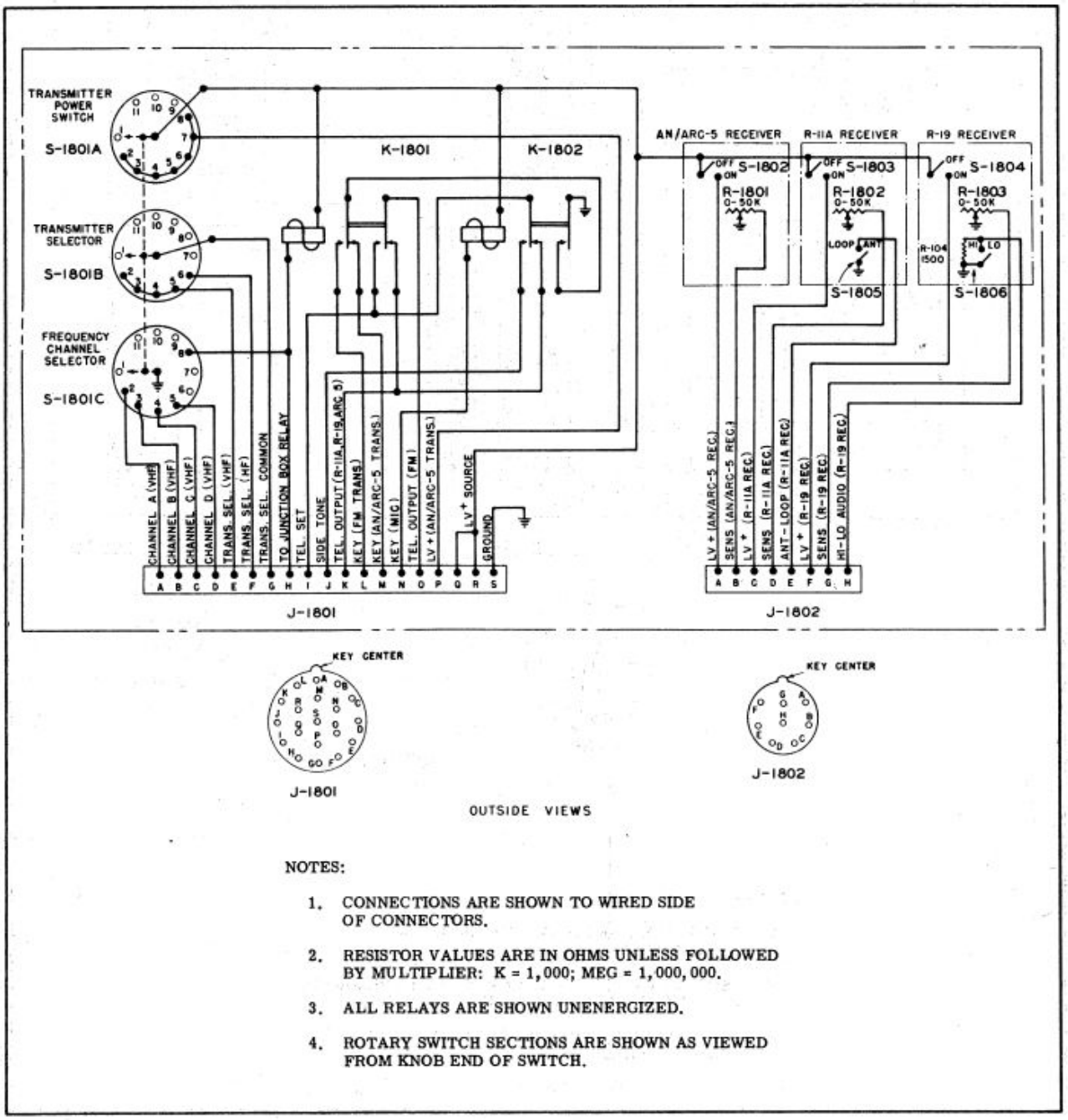

NOTES:

1. CONNECTIONS ARE SHOWN TO WIRED SIDE OF CONNECTORS.
2. RESISTOR VALUES ARE IN OHMS UNLESS FOLLOWED BY MULTIPLIER: K = 1,000; MEG = 1,000,000.
3. ALL RELAYS ARE SHOWN UNENERGIZED.
4. ROTARY SWITCH SECTIONS ARE SHOWN AS VIEWED FROM KNOB END OF SWITCH.

Figure 4-31. Control Unit ARC Type C-40, Schematic Diagram

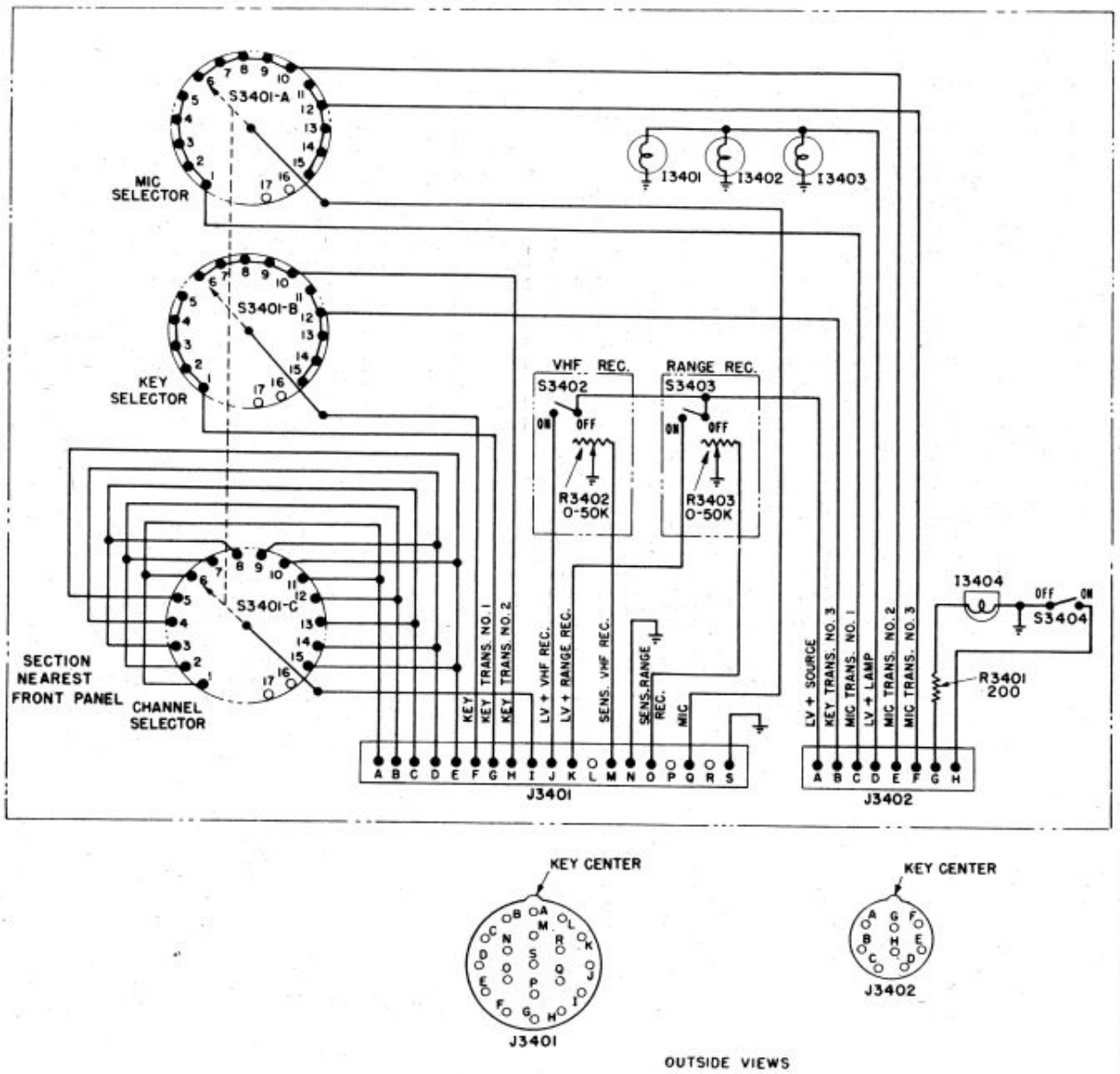

NOTES:

1. CONNECTIONS ARE SHOWN TO WIRED SIDE OF CONNECTORS.
2. RESISTOR VALUES ARE IN OHMS UNLESS FOLLOWED BY MULTIPLIER: K = 1,000; MEG = 1,000,000.
3. ROTARY SWITCH SECTIONS ARE SHOWN AS VIEWED FROM KNOB END OF SWITCH

Figure 4-32. Control Unit ARC Type C-44, Schematic Diagram

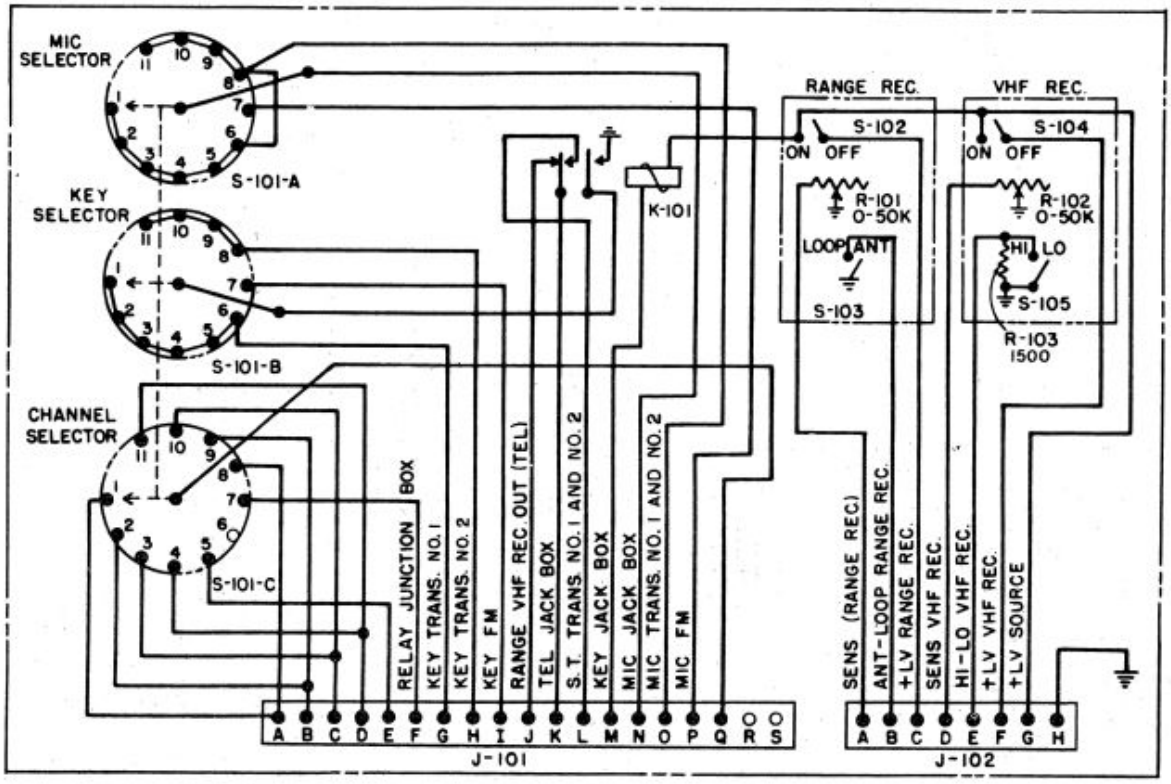

NOTES:

1. CONNECTIONS ARE SHOWN TO WIRED SIDE OF CONNECTORS.
2. RESISTOR VALUES ARE IN OHMS UNLESS FOLLOWED BY MULTIPLIER: K = 1,000; MEG = 1,000,000.
3. RELAY IS SHOWN UNENERGIZED.
4. ROTARY SWITCH SECTIONS ARE SHOWN AS VIEWED FROM KNOB END OF SWITCH.

Figure 4-33. Control Unit ARC Type C-46, Schematic Diagram

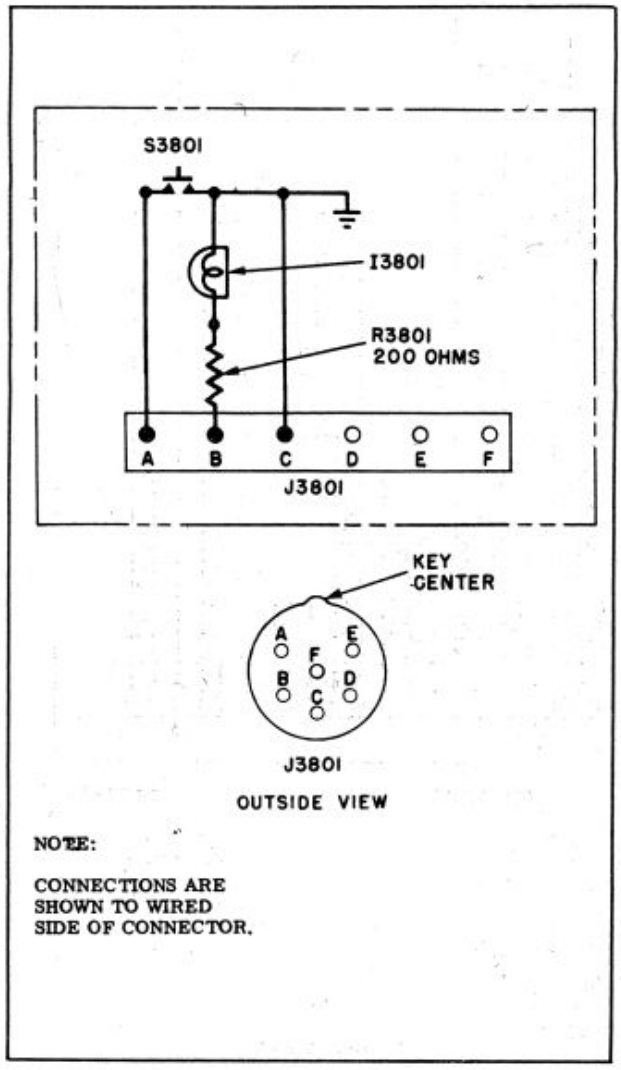

Figure 4-34. Control Unit ARC Type C-47, Schematic Diagram

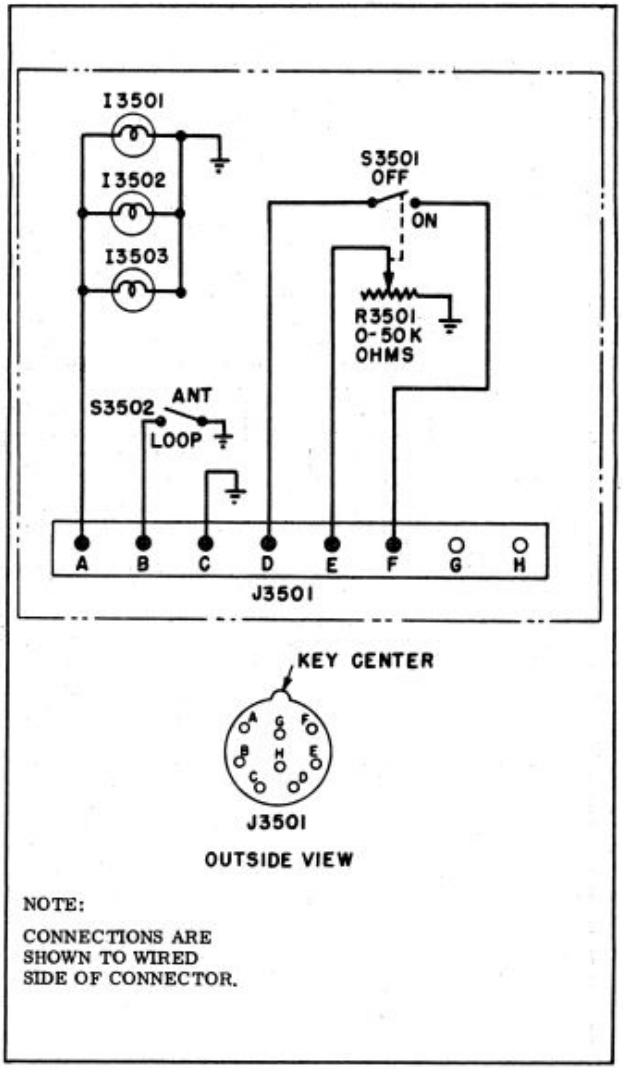

Figure 4-35. Control Unit ARC Type C-48, Schematic Diagram

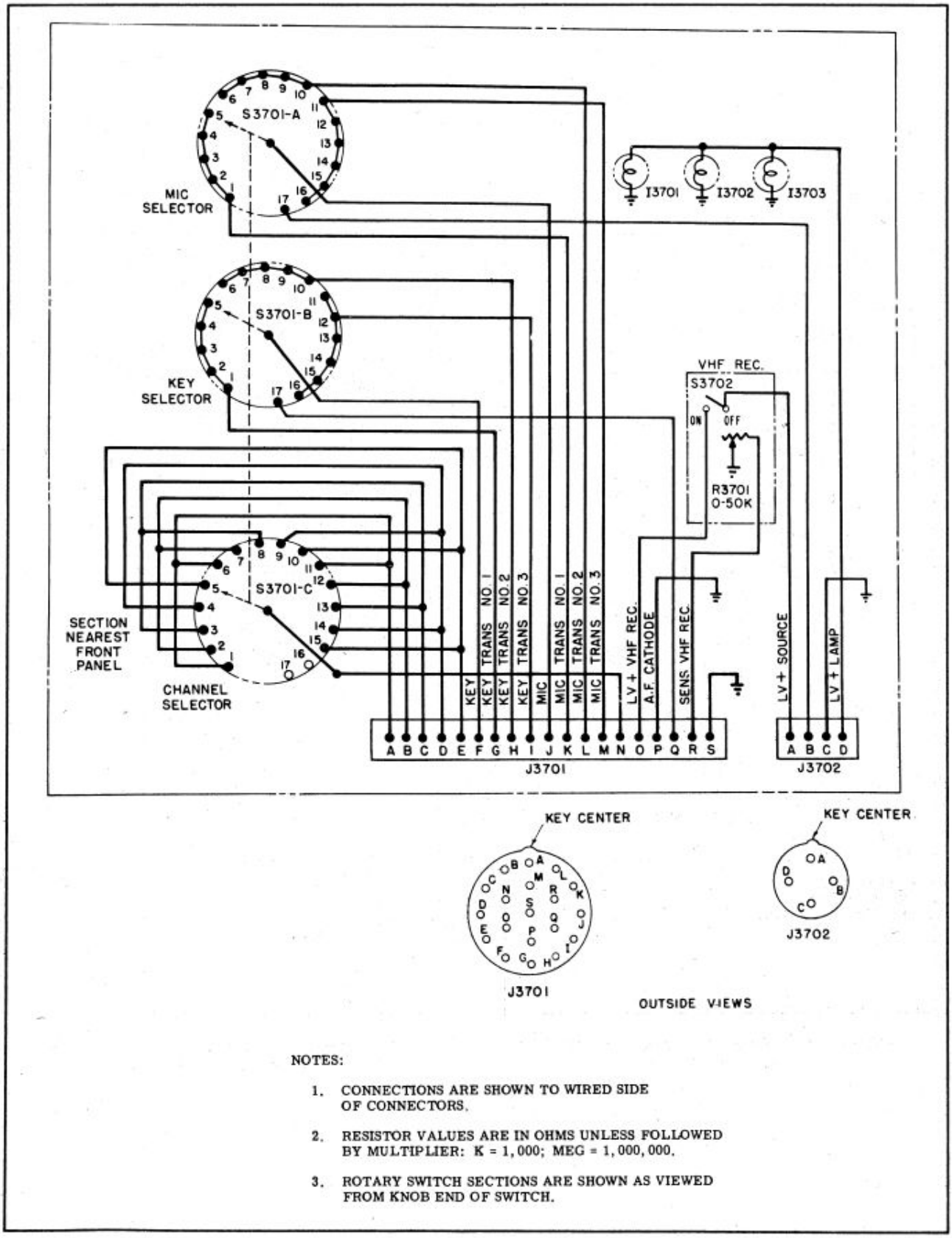

NOTES:

1. CONNECTIONS ARE SHOWN TO WIRED SIDE OF CONNECTORS.
2. RESISTOR VALUES ARE IN OHMS UNLESS FOLLOWED BY MULTIPLIER: K = 1,000; MEG = 1,000,000.
3. ROTARY SWITCH SECTIONS ARE SHOWN AS VIEWED FROM KNOB END OF SWITCH.

Figure 4-36. Control Unit ARC Type C-49, Schematic Diagram