P4 RAY

Amalgamated WORLD WIDE WIRELESS Wireless (Australasia) Ltd

INSTRUCTION BOOK NO. 6770R

SUPERHETERODYNE RECEIVER C,

1C, 3C6770

3BZ

47 York Street, Sydney

INSTRUCTION BOOK NO. 677OR

INSTALLATION, OPERATION AND MAINTENANCE

A.W.A. SUPERHETERODYNE RECEIVER

TYPES C, 1C, 3C&77O

Amalgamated Wireless (A'sia) Limited

47 York Street

SYDNEY

SCHEDULE OF DRAWINGS	DWG. NOS.
Schematic Diagram, Superheterodyne Receiver, type C6770	6770C1
* Schematic Diagram, Superheterodyne Receiver, type 1C6770	6770C2
Schematic Diagram, Superheterodyne Receiver, type 3C6770	6770C3
Layout of Components, Underneath view, Receiver type C, 3C6770	6770D1
Layout of Components, Plan view, Receiver type C, 3C6770	6770D2
* Layout of Components, Underneath View, Receiver type 1C6770	6770D3
* Layout of Components, Plan view, Receiver type 1C6770	6770D4
Layout of Components, Plan and Underneath view, Vibrator Power Supply Unit, type H6499	6499D1
Battery Cable Interconnection Diagram	6770D5

AMENDMENT TO 677OR SERIES INSTRUCTION BOOKS.

Neutralising of I.F. Amplifier

In later issues of the C6770 Series Receivers, the neutralising applied to the I.F. amplifier valve V3 has been changed from fixed to variable by a minor modification. The neutralising capacitor C73 is changed from a 9 μμF. fixed mica to a 2-28 μμF. air-trimmer type 17659, and one side of C44 is now taken direct to earth instead of to the lower end of the first I.F. transformer T16. The new arrangement is shown on the circuit diagrams.

Should alignment of the I.F. channel be necessary, it is advised that C73 be screwed three parts of the way in (anti-clockwise) before commencing alignment. Then as alignment proceeds, it may be screwed further out (clockwise, to increase gain) until maximum output at 535 kc. is obtained without instability.

031248

ADDENDUM 10-11 TO
INSTRUCTION BOOK NO. 6770R.

10th March, 1943.

This addendum covers Receivers types 10C6770 and 11C6770.

This type 10C6770 is identical in frequency coverage characteristics and power supply with the type C6770, but is housed in a case type 14R6836 for mounting in a rack.

The type 11C6770 is identical with type 1C6770, but is equipped with a rack mounting case type 15R6836. The material of Instruction Book No. 6770R can therefore be regarded as applying in detail to Receivers type 10C6770 and 11C6770.

The types of receivers covered by this book may be summarised as follows:-

1-C6770: Receiver C6770 in case R6836

10C6770: Receiver C6770 in case 14R6836

2-1C6770: Receiver 1C6770 in case 1R6836

11C6770: Receiver 1C6770 in case 15R6836

3-3C6770: Receiver 3C6770 in case 2R6836

INSTRUCTION BOOK NO. 6770R

SCHEDULE OF INSTRUCTIONS

SECTION A

SCHEDULE OF EQUIPMENT

Item 1. One A.W.A. 5 Band Battery-Operated Superheterodyne Receiver type C6770, complete with Vibrator Power Supply Unit, type H6499, 6 or 12V operation,

OR

One A.W.A. 5 Band A.C. Mains-Operated Superheterodyne Receiver type 1C6770, 105/130-200/260 volt, 40/60 ~ operation,

OR

One A.W.A. 5 Band Battery-Operated Superheterodyne Receiver, type 3C6770 (crystal controlled) complete with Vibrator Power Supply Unit, type H6499, 6 or 12V operation.

Item 2. Valves, Vibrator and Crystal required for the operation of item 1, as follows:-

1 Radiotron type 6U7G
2 Radiotron type 6J8G
1 Radiotron type 6G8G
1 Radiotron type 6V6G
1 Radiotron type 5Y3G (1C6770 only)
1 Oak Vibrator type V5809 (C,3C6770)
1 A.W.A. Crystal type R5587 (3C6770 only) frequency as required.

Item 3. One 12 volt 3 core Battery Cable (for C, 3C6770),

OR

One 6 volt 2 core Battery Cable (for C, 3C6770)

Item 4. One pair Ericsson Headphones.

Item 5. One A.W.A. Loudspeaker Unit, type D6799.

Item 6. One Loudspeaker Cable (Dwg. No. 6799A1/31).

Item 7. One 3A Australux Fuse (spare).

Item 8. Instruction Book No. 6770R.

SECTION B

OUTLINE OF TYPE 6770 SERIES RECEIVERS

C6770	Battery-operated, 6 or 12 volt, 30 Mc. - 200 kc.
1C6770	A.C. mains-operated, 105-130 or 200-260 volt, 40-60 ~, 30 Mc.-200 kc.
3C6770	Battery-operated, 6 or 12 volt, 11.1 Mc.-200 kc. + crystal locked position.

NOTE: When ordering spares or replacement parts, etc., quote full type number of Receiver as given on name plate.

The first figure of type number refers to the type of mounting used and has no bearing on the instructions contained in this book.

Example Type 2-1C6770 Receiver is a type 1C6770 A.C. mains-operated receiver mounted in a type 2-1C6770 case assembly.

WEIGHTS AND DIMENSIONS

RECEIVER

(a) Dimensions

Length (including cover clips)	16.3/4"
Height (including feet)	10.1/2"
Depth (including cover and clips at rear)	12.1/4"

(b) Weight

Less valves and vibrator	38 lbs.

LOUDSPEAKER

(a) Dimensions

Length (including hook nuts)	17"
Height (including feet)	10.1/2"
Depth	10.1/4"

(b) Weight

Loudspeaker Unit (less Mic. & Phones)	19.3/4 lbs.
Cables	3.1/4 lbs.
Loudspeaker Unit with Cables, Mic. & Phones	24 lbs.

SECTION C

DESCRIPTION

1. GENERAL

The Receiver is a 5 valve Superheterodyne, covering a wide frequency range and is designed to give economical and efficient operation in communication services in applications where the larger type of communication receiver is not called for. It is available in three main types, these being, for operation from:

(a) Secondary batteries of either 6 or 12 volts when a self-contained vibrator-operated high tension supply is fitted.

(b) A.C. supply mains of voltages between 105 and 130 volts and between 200 and 260 volts and of frequency of between 40 and 60 ∿.

(c) D.C. supply mains of 110 to 130 volts or 200 to 260 volts.

In the case of the first two applications, the receiver is practically identical, the only variation being in the power supply while in the third application there is a greater variation of circuit arrangement though external appearances are similar.

A total of five valves is used and by using multi-purpose types, such facilities as C.W. reception, A.V.C., etc., are available.

The receiver follows modern practice in general design, iron-cored high gain coils being used where possible, while care has been taken to maintain constancy of trimmer adjustments by the use of ceramic and trolitul insulated types of adjustable condensers.

A further type, in which range A is deleted and its place taken by a crystal-locked fixed tune position is available. The power supply in this case is from batteries as for paragraph (a) above.

2. VALVES

The valves used in this receiver are of the octal based glass series and are all made in Australia. The types and functions are as follows:-

Circ. Ref.No.	Type	Function
V1	6U7G	R.F. Amplifier
V2	6J8G	Mixer Oscillator
V3	6J8G	I.F. Amp. & Beat Osc.
V4	6G8G	Diode Detector, A.V.C. and 1st Audio Valve.
V5	6V6G	Output Valve
	25L6G	Output valve (D.C. mains models only)
V6	5Y3G	Rectifier Valve (A.C. mains models only)

SECTION C (Contd)

3. FREQUENCY RANGE

The receiver has five tuning ranges, the coils being mounted the receiver in close proximity to the associated switch and valves.

The tuning ranges are as follows:

(a)	30-9 Mc.	10-33 metres
(b)	11.1-3.5 Mc.	27-85 metres
(c)	4.6-1.5 Mc.	65-200 metres
(d)	1,650-545 kc.	182-550 metres
(e)	515-200 kc.	580-1,500 metres

Tuning is by means of a 3 gang single control variable condens and this is operated by means of a two speed vernier drive, giving direct drive and 54-1 vernier.

The dial scale is an engraved semi-circular plate 8" diameter giving a scale length on the highest frequency band of approximately 12".

The tuning coils are grouped around the wave change switch, the three ranges (a), (c) and (d) being mounted on the shields between the wave change switch sections, while ranges (b) and (e) are mounted in screens directly on the chassis.

The coils of ranges (c), (d) and (e) are fitted with iron cores in order to improve the characteristics of the windings and also to give a fine adjustment to the inductance. The trimmer condensers on ranges (a), (b) and (e), where the values are most critical, are of the ceramic insulated piston type while on ranges (c) and (d), a trolitol insulated low drift compression condenser is used. Padding condensers are fixed in each case.

In the case of the type 3C6770 Receiver, the high frequency range is removed and replaced by a fixed frequency, crystal-locked position. In this position, the aerial and R.F. circuits are tuned by fixed capacities while the oscillator frequency is controlled by the crystal which is mounted in a plug-in assembly and located on the front right-hand edge of the receiver chassis. The crystal controlled oscillator operates at transmitter frequency plus the intermediate frequency and by beating with the incoming signal, produces a beat signal at I.F.

4. POWER SUPPLY

This varies according to receiver types, as follows:-

(a) C6770 and 3C6770

These models operate either from a 6 or 12 volt accumulator battery. The adjustment of the receiver to the voltage supply is made by the cable connecting the unit to the battery. In the case of the 6 volt installation, there are two connections to the accumulator and the two units, receiver and vibrator, are connected in parallel; while in the 12 volt installation, there are three connections to the battery and the two units are connected in series.

The high tension Power Unit consists of a vibrator unit type

SECTION C (Contd.)

H6499 and this is mounted on the receiver chassis as a complete self-contained unit. Connections are taken from the input plug at the rear of the case direct to a fuse mounted on the side of the Vibrator Unit while the high tension output is taken from a further tag mounted on the same panel. A synchronous vibrator type V5809 is used and the unit is carefully filtered both mechanically and electrically.

(b) 1C6770

The power supply for this model consists of a built-in A.C. power pack consisting of a "universal" transformer, smoothing choke and condensers and 5Y3G rectifying valve. The power supply lead is taken to the appropriate tags on the primary connecting strip. This strip carries five soldering contacts to which the connections from the primary of the power transformers are taken and by varying the position of the mains cable, various input voltages can be accommodated.

5. INPUT ARRANGEMENTS

Three terminals are mounted on the rear edge of the chassis, these being marked Aerial, R.E. and Earth. The two terminals marked Aerial and R.E. are insulated from the remainder of the chassis by means of high voltage mica condensers while the terminal marked Earth gives direct connection to the chassis.

The aerial coils are of the high impedance type and these give practically uniform gain and selectivity over the tuning range.

6. OUTPUT ARRANGEMENTS

The 6V6G output valve is operated under special low voltage conditions and gives an undistorted output of 850 milliwatts. The output transformer has been designed to operate either a loudspeaker, which should be of the permanent magnet type, or to feed a 600 Ω line. A pair of high resistance headphones may be connected across the 600 Ω terminals, but in cases where a speaker is not used, a resistor of 600 Ω should also be connected across the terminals in order to maintain correct loading of the output valve.

The intermediate frequency used in this receiver is 535 kc., and this choice of frequency has been made in order to cover all used frequencies between the tuning limits of the receiver. Due consideration has also been given to the requirements of selectivity, overall amplification and the image ratio on the high frequency bands.

The I.F. transformers are of the iron-cored type giving high gain and selectivity. The transformers are tuned by fixed capacities, variation of tuning being made by varying the position of the iron core.

The heterodyne oscillator coil is mounted underneath the chassis in a shield. This is a fixed frequency oscillator using the triode section of the I.F. 6J8G valve and the signal is injected into the I.F. amplifier by means of the internal connections in the valve. The frequency of the oscillator is 178.3 kc. and the third harmonic of this frequency beats with the incoming signal in the I F. amplifier and produces an audible note.

7. CONTROLS

These are seven in all. All controls, with the exception of

SECTION C (Contd.)

the tuning control, are mounted at one level, the tuning control being mounted in the centre of the front panel at a convenient height from the table for easy tuning.

The controls, from left to right of the receiver, are as follows:

(a) Audio Volume Control: This is the main control for normal operation when the beat oscillator is not used. It consists of a high resistance potentiometer connected as the diode load resistance in the second detector circuit and thus controls the amount of signal fed to the audio amplifier.

(b) Tone Control: This is a high resistance potentiometer and is connected in conjunction with a condenser in the plate circuit of the 6V6G output valve. It will be found useful to reduce noise and mush where these are troublesome.

(c) Transmit Receive Switch: This switch varies in its function in the various types of receiver. In the C6770 it is a three position switch, marked Off-Transmit-Receive, and the three position are as follows:

(i) Receiver and Vibrator Off.

(ii) Filaments connected on receiver but vibrator off, giving a stand-by position while transmitting in cases where interference from the nearby transmitter is experienced.

(ii) Filaments and vibrator connected.

In the 1C6770, the switch becomes a two position switch, Transmit-Receive, and in the Transmit position the high tension is removed from portion of the receiver in order to silence the receiver.

(d) A.V.C.-Beat Oscillator Switch: This switch also has three positions, these being as follows:

(i) Beat Oscillator Off-A.V.C. on.

(ii) Beat Oscillator Off-A.V.C. off.

(iii) Beat Oscillator On-A.V.C. Off.

The various types of signals may thus be received to best advantage. Position (i) is intended for 'phone reception and for this type of signal the R.F. control should be at or near the maximum position in order to obtain maximum control by the A.V.C. Adjustment of volume should be made by the audio control while the R.F. control may be used to reduce the overall sensitivity slightly in order to obtain quiet tuning between stations.

The second position (ii) is for Interrupted or Modulated C.W. In this case, A.V.C. is not required, otherwise noise would be troublesome in the mode spacing. The R.F. control may be used in this position.

Position (iii) is for C.W. operation and here the R.F. control should be used as the main volume control with the audio control at the maximum position. If the audio control is used for C.W. reception, it is found that, in many cases, insufficient modulation of the received carrier will be obtained.

SECTION C (Contd.)

(e) Wave Change Switch: The letters on the indicating plate refer to the wave ranges and the correct scale on the dial scale is thus indicated.

(f) R.F. Volume Control: This is wire wound potentiometer connected in the cathode circuits of the R.F., mixer and I.F. valves and varies the gain of that portion of the receiver prior to the second detector valve.

The main tuning control consists of a two speed dial in which the inner or main portion is connected direct to the pointer and cursor. This portion gives direct tuning while the outer disc operates through reduction gearing and gives a vernier of approximately 54-1.

8. MOUNTINGS

The receiver is normally fitted in a pressed steel case with detachable lid and base and this is supplied fitted with four rubber feet for table mounting. These feet may be replaced by a bolting down plate where it is necessary that the equipment be screwed down, or, alternatively, the case may be fitted with side mounting bollards and clips, the latter being drilled to P.M.G. standard for fitting to a standard 20.1/4" rack.

The receiver may also be supplied fitted to a standard 19" x 8.3/4" front panel for rack mounting.

SECTION D

INSTALLATION

The receiver may be mounted in any convenient position on the operating table, due consideration being made to the position of aerial and earth leads and battery or power connections. The ease of operation of the controls should also be considered in the placement of the receiver.

Valves should be fitted to their respective sockets according to the stencilled markings on the chassis and should be pushed firmly home. Grid clips and valve screens should be securely fitted. The vibrator should be checked on first installation in order to ascertain that it is fitting firmly in its socket. It is necessary to remove the lid of the vibrator unit to obtain access to the vibrator. One screw, at the front edge of the lid, secures the cover, the back edge being slipped into place.

The fuse should also be checked, this being located on the terminal board on the left-hand side of the vibrator unit. These details are shown in the layout drawings, refer Schedule of Drawings for drawing numbers.

In the case of the battery-operated version, C6770 and 3C6770, the battery connections should be securely made as shown in Drawing No. 6770D5 and a smearing of vaseline applied to the clips to prevent electrolytic action on the terminals. These clips may be permanently left on the battery, the cable being removed from the receiver when the battery is removed for charging.

Where the A.C. version is being used, the voltage of the local supply should be ascertained and the necessary adjustments made to the transformer connections if required. The base should be removed from the receiver case when the termination strip will be seen close to where the cable emerges from the case. The two leads of the cable should be connected between the tag marked "common" and the tag marked with the supply voltage. The receiver is normally tested on a 230-260 volt A.C. supply and connected in this manner when delivered.

The current drain of the receiver is as follows:

Battery-Operated Model

6 volt input: 3.3 amps.
12 volt input: 1.65 amps.

A.C. Mains Model

240V, 50 ~ input to 230/260 tap 25 watts

SECTION E

OPERATION

Turn the switch controlling the power supply on. An interval of about 30 seconds should be allowed to enable the valves to reach their normal operating temperature. Signals or static should now be heard. Set the range switch to the wave range which includes the frequency of the station it is desired to receive and adjust the tuning control, using the fast movement, to approximately the frequency of the station. If the signal which it is desired to receive is of the C.W. type, turn the Phone-M.C.W.-C.W. switch to the C.W. position.

Now swing the tuning dial a few degrees either side of the setting at which the signal is expected, using the vernier or outer portion of the tuning knob. At the same time, adjust the volume control so that the signals are heard at low volume.

When the receiver is being used for the reception of phone signals, the audio volume control should be used to adjust the level of received signal, the tuning control being adjusted to a position midway between the points where the signal disappears. The R.F. control should be kept as near as possible to the maximum position and this adjustment will give the maximum amount of control to the A.V.C. and will thus give best reception on a fading signal. The R.F. control may be used as a noise suppression control to reduce the noise experienced when tuning between stations but, as a general rule, the R.F. control should be kept at or near to the maximum position for phone reception.

For C.W. reception, when the A.V.C. is removed and the Heterodyne Oscillator connected in circuit, the R.F. control should be used as the main volume control. Tuning should be adjusted to give the most readable note with least interference. The audio control should be kept as near as possible to the maximum position otherwise it is possible that insufficient modulation will be obtained from the heterodyne oscillator.

Variation of tuning of the beat oscillator is by adjustment of the iron core in the coil. The method of adjustment is given under the heading "Maintenance".

SECTION F

MAINTENANCE

1. WARNING

GREAT CARE AGAINST SHOCK SHOULD BE TAKEN IN TESTING AND INSPECTING THE UNDER PORTION OF THE RECEIVER, PARTICULARLY IN THE CASE OF MAINS-OPERATED EQUIPMENT.

2. GENERAL

Should the receiver fail to operate, it is advisable to check that the necessary power supply is correctly connected, etc. In the case of the battery version, check that the battery connections are correct and that the cable plug is firmly located in the receiver. If these connections appear correct, it is possible that the fuse is blown in the vibrator circuit. This may be checked by touching the lid of the vibrator unit when the buzz of the vibrator may be felt. If this buzz cannot be detected, check the fuse to see if it is blown. This is located on the left-hand side of the vibrator case and the receiver should be switched to "OFF" before the fuse is removed.

If the fuse is O.K. and no buzz is detected or if the fuse continues to blow when the receiver is switched on, it is probable that the vibrator is faulty and this should be replaced. The lid of the vibrator case may be removed after taking out the securing screw, located on the front edge of the cover. The vibrator will now be seen in approximately the left-hand centre of the unit and is a tubular tinned iron case about the size of a small cocoa tin. Pull the vibrator from its socket and replace by a spare of the same type. It is not recommended that the vibrator contacts be adjusted or interfered with in any way but, in the case of necessity, the outer cover may be removed with the aid of a soldering iron and the contacts carefully cleaned with a piece of fine glass paper, taking care to remove any fluff or foreign matter before replacing the cover.

If the vibrator is operating correctly, the trouble may be in the receiver proper or in the headphones or speaker if the latter is used. These two items can be quickly checked by flicking the connecting wires across a cell from a torch, a scratching noise being heard if they are O.K.

Should the 'phones or speaker appear to be functioning normally, the valves in the receiver should be checked to ascertain if one has burned out. Remove the top portion of the valve shield, the cap, leaving the main tubular part of the shield in position. By shielding the valve from the daylight, the end of the cathode can be seen to be glowing red hot in the centre top of the "works" of the valve. The cathode is a tube about the diameter of a piece of pencil lead running down the centre of the valve. If no glow can be detected, it would appear that the heater is burned out and the valve should be replaced.

In the A.C.-operated version, no fuses are fitted to the receiver and the fuses of the supply circuit or the outlet itself checked to ascertain that current is available.

3. VOLTAGE MEASUREMENTS

The input and output voltages of the vibrator may be checked by measuring between the tags on the terminal strip on the side of the

SECTION F (Contd.)

vibrator and the chassis. These testing points are points as shown on 6770D2. The 6 volt input may be checked by reading the voltage between the tag to which the yellow lead is connected and chassis. The high tension output, which should be approximately 170 volts, is measured between the tag to which is connected the red lead and chassis.

For voltage measurements on the chassis, it is necessary that the bottom portion of the case be removed, The six securing screws should be removed when the base will pull off. The Drawings 6770D1 and 6770D3 should be referred to and the position of components located.

The voltages on the valve sockets Model C6770 and 3C6770, are approximately as follows:

Valve		Plate to Chassis	Screen to Chassis	Cathode to Chassis
6U7G	R.F.	170	105	6.5
6J8G	Mixer	170	105	7.0
	R.F. Osc.	170	-	-
6J8G	I.F. Amp.	170	87	5.0
	Het. Osc.	80	-	-
6G8G	2nd Det.	75	20	1.7
6V6G	Output	170	90	5.0

Conditions of Test

Receiver adjusted to Range E (515-200 kc.)
Tuning dial adjusted to 200 kc.
6V input to Receiver and Vibrator in battery version
Plate and screen voltages 250 volt ranges 1,000 Ω per volt meter
Cathode voltages 10V range 1,000 Ω per volt meter

In the 1C6770 model, the main +B voltage is approximately 10 volts higher and all other voltages are increased in that ratio.

It will be noticed that different coloured wires are used for the interconnection of components on the receiver, the general scheme of colours being as follows:

Red:	+B wiring
~~Orange~~ PINK:	Plate connections
Blue:	+B screens
~~Yellow~~ GREY:	Heater wiring
Green:	Grid connections
White:	Cathode circuits
~~Black~~ YELLOW:	A.V.C. and earth wiring
PINK	KNOBS

These will be of assistance in tracing connections but should not be entirely relied on as some variations are made from these colours.

The standard resistance colour code is also given and should be of assistance:

SECTION F (Contd.)

Brown	= 1	Blue	= 6	Body colour: 1st figure
Red	= 2	Violet	= 7	
Orange	= 3	Grey	= 8	End colour: 2nd figure
Yellow	= 4	White	= 9	
Green	= 5	Black	= 0	Dot colour: No. of cyphers

4. I.F. ALIGNMENT PROCEDURE

Unless it is felt certain that the alignment of the receiver is incorrect, it is not desirable to alter the adjustments from the factory setting. However, when repairs have been made to R.F. or I.F. circuits or tampering with these circuit adjustments is suspected, complete re-alignment becomes necessary.

In aligning the receiver tuned circuits, it is important to apply a definite procedure as described below and to use adequate and reliable equipment. The A.W.A. Signal Generator 1R1862 or A.W.A. Junior Signal Generator type 2R3911 is suitable for the purpose. Visual indication of output is also desirable and any output meter of conventional design is suitable.

The I.F. adjustments are at opposite ends of the transformers, adjustments of frequency being made by screwing the core either into or out of the winding by means of the slotted top. Each circuit must be aligned to 535 kc., the adjustment being the peak of signal.

To align, proceed as follows:-

(a) Remove the grid clip from the grid cap of the 6J8G mixer valve and connect the output from the signal generator, the ground connection being made to either the Earth terminal or a near-by part of the receiver chassis.

(b) Connect an output meter, across the terminals of which is a 600 Ω resistor, to the 600 Ω output terminals.

(c) Set the range switch to Range E and turn the gang condenser fully in.

(d) Set the signal generator to 535 kc. and adjust the output so that a signal is shown on the output meter.

(e) Adjust each plug, 4 in all, to maximum output, commencing with the last I.F. secondary, and reducing the input as required. Use the smallest signal consistent with good output indication so as to avoid A.V.C. action which might otherwise give apparent broad tuning.

The sensitivity of the I.F. amplifier under conditions as indicated at (c) for an output of 6 milliwatts into the load given in paragraph (b) should be 200 microvolts. The sensitivity on ranges A and B will alter owing to the variation of bias.

5. R.F. ALIGNMENT PROCEDURE

The R.F. trimming adjustments are made by means of plunger type trimmers mounted on the chassis on ranges A, B and E and by screw type trimmers mounted on the wave change switch shields close to their respective coils in the case of ranges C and D. These should be located by reference to Drawings 677OD1, D2, D3 and D4.

SECTION F (Contd.)

Padding adjustments are by means of the iron core adjustments on the oscillator coils in the case of Ranges C, D and E, the padding condenser being fixed in every case. In ranges A and B, the condenser is a large value of capacity and no adjustment is required.

The aerial and R.F. coils are also adjustable in inductance by movement of the iron cores in the case of ranges C, D and E and this assists in obtaining correct tracking.

The position of the pointer should be checked before making any adjustments to coils, etc. When the condenser is at its maximum position, plates fully in mesh, the dial should indicate the line marked 5 immediately above the "C" on the dial scale.

If a junior signal generator type 2R3911 is used for these adjustments, the all-wave dummy aerial supplied will be suitable for the alignment of all bands. When the 1R1862 type signal generator is used, the normal dummy aerial, consisting of a series connection of 200 μμF, 20 μH and 25 Ω, will be suitable for ranges E, D and C while the special short wave dummy aerial should be used on ranges B and A.

(a) Range E

(i) Connect the output of the signal generator to the "A" terminal of the receiver through the correct dummy aerial. Connect earth side of generator to the earth terminal on the receiver.

(ii) Connect an output meter across the 600 Ω output terminals and parallel the meter with a 600 Ω 1 watt resistor. If correct loading may be obtained in the output meter itself, the 600 Ω resistor can be omitted.

(iii) Set the dial pointer to 500 kc. (1550)

(iv) Adjust the signal generator to 500 kc. (1550)

(v) Adjust the oscillator trimmers C35 (C34) until a signal is heard, increasing the signal generator output, if necessary.

(vi) Adjust the R.F. and aerial trimmers C23 (C12) and C8 (C7) to give maximum response, reducing generator output as necessary in order to keep the signal to as low a value as possible consistent with readable output.

(vii) Set the dial to 210 kc. (600)

(viii) Feed a signal at 210 kc. from the signal generator as before.

(ix) Adjust the cores (T6) on the aerial, R.F. and oscillator coils T5, T10 and T15, by means of the slotted screws projecting from the centre of the coil screens to the point which gives maximum response. It is not necessary to rock the dial during this adjustment.

(x) Repeat the adjustment at 500 kc. as given at (iii), (iv), (v) and (vi) and check again at 210 kc.

(xi) Check alignment at 350 kc., approximately in the centre of the band.

(b) Range D

The procedure is the same as for Range E, except that the align-

SECTION F (Contd.)

ment points are 1,550 kc. and 600 kc. while the check point should be 1,050 kc.

The Aerial and R.F. trimmer condensers are C7 and C22 respectively, while the oscillator trimmer is C34, these being mounted on the switch shields. The coils are designated T4, T9 and T14 in the diagrams.

The low frequency end of the band is adjusted by means of the iron cores. Special holes are provided in the switch shields and chassis to provide access to these screws.

(c) Range C

Procedure here is similar to Range D, alignment points being 4.2 Mc. and 1.6 Mc., while adjustment should be checked at 2.9 Mc.

Aerial and R.F. trimmers are C6 and C21 while the oscillator trimmer is C33, these condensers again being mounted on the switch shields adjacent to their respective coils which are T3, T8 and T13. The low frequency adjustment is by means of iron cores as for Range D.

(d) Range B

The alignment of this range differs from the preceding ranges in that no adjustment is provided on the low frequency end of the band, the padding condenser being a relatively larger value of capacity.

(i) Set the receiver dial and the signal generator to 10.5 Mc.

(ii) Reduce or increase the value of the oscillator trimmer C32 until the signal is heard.

(iii) Check for the image by turning the receiver dial to 9.43 Mc. when the image should be heard. Return the receiver tuning to 10.5 Mc.

(iv) Adjust the Aerial and R.F. trimmers C5 and C20 respectively to give greatest output. It will be necessary to rock the dial slightly when peaking the R.F. trimmers to overcome pulling between R.F. and oscillator circuits. The coils are designated T2-T7 and T12 in this range.

(v) Check the alignment at 7.0 Mc., and 3.8 Mc.

(e) Range A

The alignment on this range is similar to Range B, the various points being as follows:

Align at 27.0 Mc.
Check image signal at 25.9 Mc.
Check alignment at 18.5 Mc. and 10.0 Mc.

The trimmers are Oscillator C31, R.F. C19 and Aerial C4, while coils are T11, T6 and T1 in the same order.

6. 3C6770 ALIGNMENT

Alignment on the 3C6770 Receiver where the Range A is crystal controlled is similar to the standard receiver with the following exceptions. The crystal range should be aligned first, the receiver being

SECTION F (Contd.)

aligned on actual signals from the transmitter. In the case of receivers with a crystal-controlled oscillator, the I.F. is fixed by the difference in frequency between transmitter and receiver crystals, therefore, the I.F. transformers must be aligned to a signal received from the transmitter in order to obtain maximum sensitivity on the crystal frequency. The R.F. and aerial trimmers should then be aligned to maximum response. These trimmers are C4 and C19 respectively on Drawings Nos. 6770D1 and 6770D3. The alignment of the other bands then follows in the normal manner as given in pages 13 and 14.

7. HETERODYNE OSCILLATOR ADJUSTMENT

To adjust the heterodyne oscillator while aligning the receiver, proceed in the following manner:

(a) Follow the instructions for I.F. alignment up to "(d)".

(b) Switch off the modulation from the signal generator and turn the Beat Oscillator switch to the C.W. position.

(c) Adjust the iron plug in the beat oscillator coil T18 by means of the slotted top to the position which gives a note of about 1,000 c. This adjustment may be made either side of zero beat.

The beat oscillator may be adjusted on an incoming signal, the procedure being as follows:

(a) Tune a weak modulated signal with the switch in the M.C.W. position, taking great care to adjust to the centre of the signal.

(b) Turn the switch to the C.W. position and adjust the plug as indicated above.

If bad interference is encountered on one setting of the heterodyne oscillator tuning control, it may be adjusted to the other side of zero beat when the interference will probably disappear.

SECTION G

SCHEDULE OF COMPONENTS

IMPORTANT!

HOW TO ORDER REPLACEMENT PARTS

The following systems of ordering spare or replacement parts should be adhered to in order to avoid unnecessary correspondence and expedite delivery.

1. To order a major part which carries its own type number, quote this type number; quote also serial number, resistance value or capacity value where shown.

   Examples:- Transformer, 1TK5510 (Serial No. 117)

   Resistance, A.W.A. 1S4282, 500 Ω

2. To order a small electrical part which carries no type number, quote:-

   (i) Type number and serial number of section (not whole equipment) where part is used.
   (ii) Circuit reference number.
   (iii) Circuit drawing number and sub-number, the latter being found in the right-hand section of the last entry in the "changes" column.

   Example:- Type P8368, Serial No. 18, C50A, Dwg. No. 8368C1, sub-number 2.

3. To order a part which carries no type number and has no circuit reference number, quote:-

   (i) Type number and serial number of section (not whole equipment) where part is used.
   (ii) Circuit reference number and circuit drawing number of component associated with the wanted part.
   (iii) Brief description of part.

   Example:- Type J8279, Serial No. 41. Insulated Coupling C23B, Dwg. No. 8279D1.

G. 1C. 3C. 6770 RECEIVERS

Circ. Ref.No.	Effective Value	A.W.A. Type Number (unless otherwise stated)
R1	100,000 Ω, 1/3W, (Aer. Term. Assy.)	Bifrost
R2	500,000 Ω, ½/2W (top of C2)	Chanex
R3	300 Ω, 1/3W (pins 1 and 8, V1)	Bifrost
R4	100 Ω, 1/3W (wavechange switch)	Bifrost
R5	200 Ω, 1/3W (wavechange switch)	Bifrost
R6	3,000 Ω, W.W. Rotary (chassis Mtg.)	1S5711
R7	50,000 Ω, 1W (small panel)	Chanex

SECTION G (Contd.)

Circ. Ref.No.	Effective Value	A.W.A. Type Number (unless otherwise stated)
R8	500,000 Ω, 1/2W (top of C15)	Chanex
R9	200 Ω, 1/3W (pins 1 and 8, V2)	Bifrost
R10	30,000 Ω, 1/2W (pins 5 and 8, V2)	Chanex
R11	50,000 Ω, 1W (small panel)	Chanex
R12	600 Ω, 1W (small panel)	Chanex
R13	600 Ω, 1W (small panel)	Chanex
R14	2.3 MΩ, 1/2W (pins 1 and 5, V4)	Chanex
R15	50,000 Ω, 1W (pins 5 and 8, V3)	Chanex
R16	50,000 Ω, 1/2W (2nd I.F.T. T17)	Chanex
R17	500,000 Ω, potentiometer (chassis mtg.)	Centralab
R18	1.5 MΩ, 1W (pin 5, V4 and large panel)	Chanex
R19	3,000 Ω, 1W (large panel)	Chanex
R20	1 MΩ, 1W (large panel)	Chanex
R21	1 MΩ, 1W (large panel)	Chanex
R22	200,000 Ω, 1W (large panel)	Chanex
R23	500,000 Ω, 1W (large panel)	Chanex
R24	350 Ω, 3W (large panel)	I.R.C. type AB, Ctg.C, term. 1
R25	100,000 Ω, 1W (large panel)	Chanex
R26	100,000 Ω, potentiometer (chassis mtg.)	Centralab
R27	50,000 Ω, 1W (large panel)	Chanex
R28	100,000 Ω, 1W (pin 4, V3 and T17)	Chanex
R29	30,000 Ω, 1W (het. osc. assy. T18)	Chanex
R30	500,000 Ω, 1/4W (large panel)	Chanex
R31 (type 3C only)	100,000 Ω, 1W	Chanex
R32 (type 3C only)	50,000 Ω, 1W	Chanex

SECTION G (Contd.)

Circ. Ref.No.	Effective Value	A.W.A. Type Number (unless otherwise stated)
R34	100,000 Ω, 1/4W	Chanex
R35 (type 1C only)	50,000 Ω, 1W	Chanex

Condensers

C1	500 μμF, 700V.W., mica (aerial term. assy.)	S6772
C2	Variable (3 gang) (chassis)	4740
C3	6 μμF, ±10%, silver mica (aerial coil T3)	Simplex
C4	2-20 μμF, air trimmer (chassis)	3661
C5	2-20 μμF, air trimmer (chassis)	3661
C6	2½-30 μμF, air trimmer (switch screen)	1S7105
C7	2½-30 μμF, air trimmer (switch screen)	1S7105
C8	2-20 μμF, air trimmer (chassis)	3661
C9	15 μμF, 750V.W., Code C, mica (air trimmer C8)	S6771
C10	500 μμF, 750V.W.,mica (aer. term. assy.	S6772
C11	200 μμF, ±10%, silver mica (top of C2)	Simplex
C12	0.1 μF, 350V.W., paper (pin 5, V1)	S7080
C13	0.05 μF, 350V.W., paper (small panel)	S7080
C14	0.1 μF, 350V.W., paper (small panel)	S7080
C15	Variable (3 gang) (chassis)	4740
C16	0.1 μF, 350V.W., paper (pin 6, V1)	S7080
C17	9 μμF, ±10%, silver mica (R.F. coil T6)	Simplex
C18	6 μμF, ±10%, silver mica (R.F. coil T7)	Simplex
C19	2-20 μμF, air trimmer (chassis)	3661

SECTION G (Contd.)

Circ. Ref.No.	Effective Value	A.W.A. Type Number (unless otherwise stated)
C20	2-20 μμF, air trimmer (chassis)	3661
C21	2½-30 μμF, air trimmer (switch screen)	1S7105
C22	2½-30 μμF, air trimmer (switch screen)	1S7105
C23	2-20 μμF, air trimmer (chassis)	3661
C24	6 μμF, 750V.W., Code F, mica (R.F. coil T10)	S6771
C25	20 μμF, 750V.W., Code K, mica (air trimmer C23)	S6771
C26	200 μμF, ±10%, silver mica (top of C15)	Simplex
C27	0.1 μF, 350V.W., paper (pin 8, V2)	S7080
C28	0.1 μF, 350V.W., paper (small panel)	S7080
C29	70 μμF, 750V.W., Code N, mica (pin 5, V2)	S6771
C30	Variable (3 gang) (chassis)	4740
C31 (types C & 1C)	2-20 μμF, air trimmer (chassis)	3661
C31 (type 3C only)	0.05 μF, 350V.W., paper	S7080
C32	2-20 μμF, air trimmer (chassis)	3661
C33	2½-30 μμF, air trimmer (switch screen)	1S7105
C34	2½-30 μμF, air trimmer (switch screen)	1S7105
C35	2-20 μμF, air trimmer (chassis)	3661
C36	43 μμF, 750V.W., Code X, mica (air. trim. Q35)	S6771
C37	140 μμF, 750V.W., Code 1A, mica (osc. coil T15)	S6771
C38	0.05 μF, 350V.W., paper (osc. coil T14)	S7080
C39	310 μμF, 750V.W., mica (osc. coil T14)	S6772

SECTION G (Contd.)

Circ. Ref.No.	Effective Value	A.W.A. Type Number (unless otherwise stated)
C40	980 μμF, 750V.W., mica (osc. coil T13)	S6772
C41	2,550 μμF, 750V.W., mica (osc. coil T12)	S6773
C42 (types C & 1C)	5,400 μμF, 750V.W., mica (osc. coil T11)	S6773
C43	85μμF, ±10%, silver mica (inside T16)	Simplex
C44	85 μμF, ±10%, silver mica (inside T16)	Simplex
C45	0.1 μF, 350V.W., paper (I.F.T. T16)	S7080
C46	0.1 μF, 350V.W., paper (pin 8, V3)	S7080
C47	200 μμF, 750V.W., Code J, mica (inside T18)	S6771
C48	200 μμF, 750V.W., Code J, mica (T18)	S6771
C49	0.1 μF, 350V.W., paper (large panel)	S7080
C50	200 μμF, 750V.W., Code J, mica (pin 5, V4 to T17)	S6771
C51	85μμF, ±10%, silver mica (inside T17)	Simplex
C52	85 μμF, ±10%, silver mica (inside T17)	Simplex
C53	110 μμF, 750V.W., Code L, mica (pin 8, V4 to T17)	S6771
C54	110 μμF, 750V.W., Code L, mica (pin 8, V4 to T17)	S6771
C55	0.05 μF, 350V.W., paper (R17 to large panel)	S7080
C56	25 μF, 40V.P., Elec. (large panel)	Ducon ET10749
C57	0.1 μF, 350V.W., paper (large panel)	S7080
C58	0.5 μF, 350V.W., paper (large panel)	S7080
C59	0.0025 μF, 700V.W., paper (large panel)	S7080
C60	0.1 μF, 350V.W., paper (pin 4, V5)	S7080
C61	0.01 μF, 700V.W., paper (pin 3 and 6, V5)	S7080

SECTION G (Contd.)

Circ. Ref.No.	Effective Value	A.W.A. Type Number (unless otherwise stated)
C62	25 µF, 40V.P., elec. (large panel)	Ducon ET10749
C63	0.05 µF, 350V.W., paper (large panel)	S7080
C64 (types C & 3C)	8 µF, 450V.W., elec. (chassis mtg.)	Ducon EE10774
C65	0.1 µF, 350V.W., paper (small panel)	S7080
C66	0.25 µF, 350V.W., paper (chassis)	S7080
C67	0.1 µF, 350V.W., paper (lge. panel & chassis)	S7080
C72	0.01 µF, 350V.W., paper	S7080
C73	9 µµF, 750V.W., Code B, mica	S6771
C90 (type 1C only)	16 µF, 500V.W., Wet. elec. or 24 µF, 600V.P., dry elec.	Solar Ducon
C91 (type 1C only)	16 µF, 500V.W., Wet. elec. or 24 µF, 600V.P., dry elec.	Solar Ducon

Transformers

T1	Types C & 1C, aerial coil	6770A3/98
T1	Type 3C, aerial coil	6770/14
T2	All types, aerial coil	6770A4/103
T3	All types, aerial coil	6770A3/92
T4	All types, aerial coil	6770A3/95
T5	All types, aerial coil	6770A4/103
T6	Types C and 1C, R.F. coil	6770A3/99
T6	Type 3C, R.F. Coil	6770/15
T7	All types, R.F. coil	6770A4/104
T8	All types R.F. coil	6770A3/93
T9	All types, R.F. coil	6770A3/96
T10	All types, R.F. coil	6770A4/104

SECTION G (Contd.)

Circ. Ref.No.	Effective Value	A.W.A. Type Number (unless otherwise stated)
T11	Types C and 1C, Osc. coil	6770A4/100
T11	Type 3C, osc. coil	6770/155
T12	All types, osc. coil	6770A4/105
T13	All types, Osc. coil	6770A3/94
T14	All types, osc. coil	6770A3/97
T15	All types, osc. coil	6770A4/105
T16	All types, I.F. transformer	4082/1
T17	All types, I.F. transformer	4082/1
T18	All types, Het. osc. coil	6770A4/119
T19	Output transformer	1TX9094
T94 (type 1C only)	Rectifier transformer	1TK6746
T95 (type 1C only)	Filter Choke	1TL14040

Switches

S1	Wavechange switch (complete assy. with shields, less coils and condensers	6770A5/215
S2	Phone-M.C.W.-C.W. switch	6770E2/90
S3 (type C & 3C)	Off-Transmit-Receive switch	6770E2/90
S4 (type 1C)	Transmit-Receive switch	6770A4/91

Vibrator Unit, type H6499

R80	400 Ω, 1/3W (vibrator socket)	Bifrost
C80	0.02 µF, 700V.W., paper (underside Vib. unit)	S7080
C81	300 µµF, 750V.W., mica (T83 to earth)	S6772
C82	0.5 µF, 350V.W., paper (RF62 to earth)	S7084

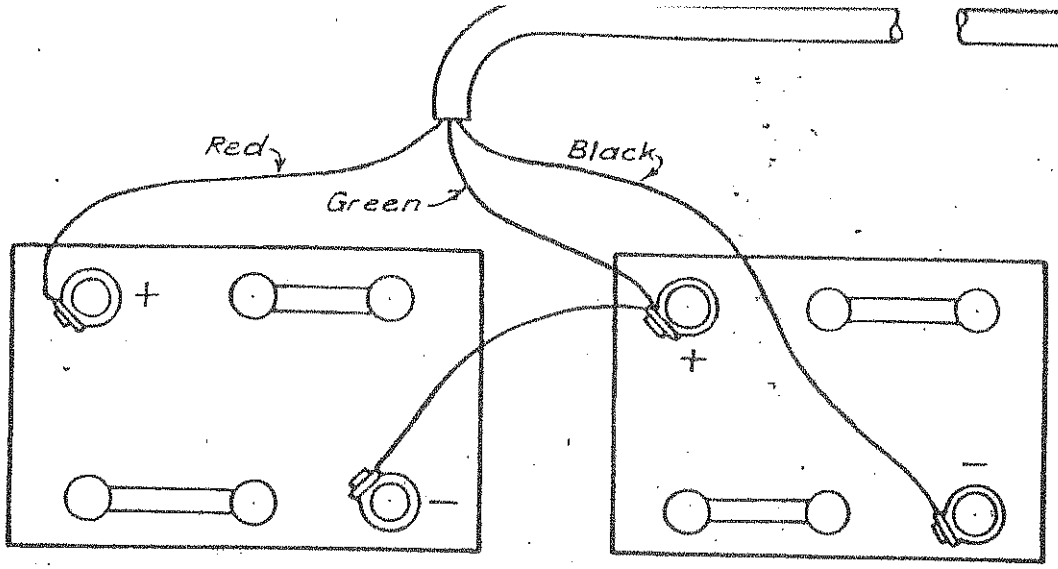

BATTERY CABLE CONNECTIONS 12V OPERATION

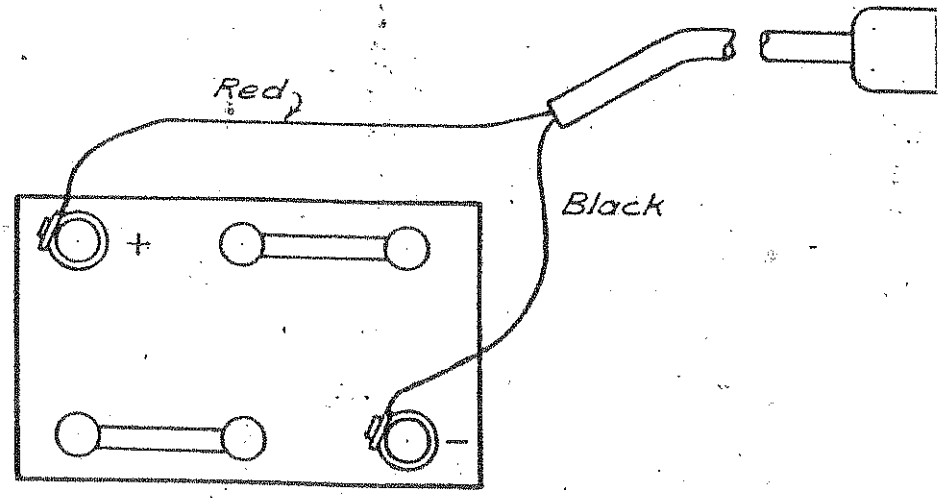

BATTERY CABLE CONNECTIONS 6V OPERATION

FIG. X

AMALGAMATED WIRELESS (AUSTRALASIA) LTD. - SYDNEY	REF.			1ST SHEET REF.
	ARGT.	J. STABB	24.4.40	
BATTERY CABLE INTERCONNECTION DIAGRAM	DRN.	J. STUBBING	10.4.40	TYPE C6770 3C6770
	TRCD.			
	CKD.	J. STACY	29.4.40	DRG 677005

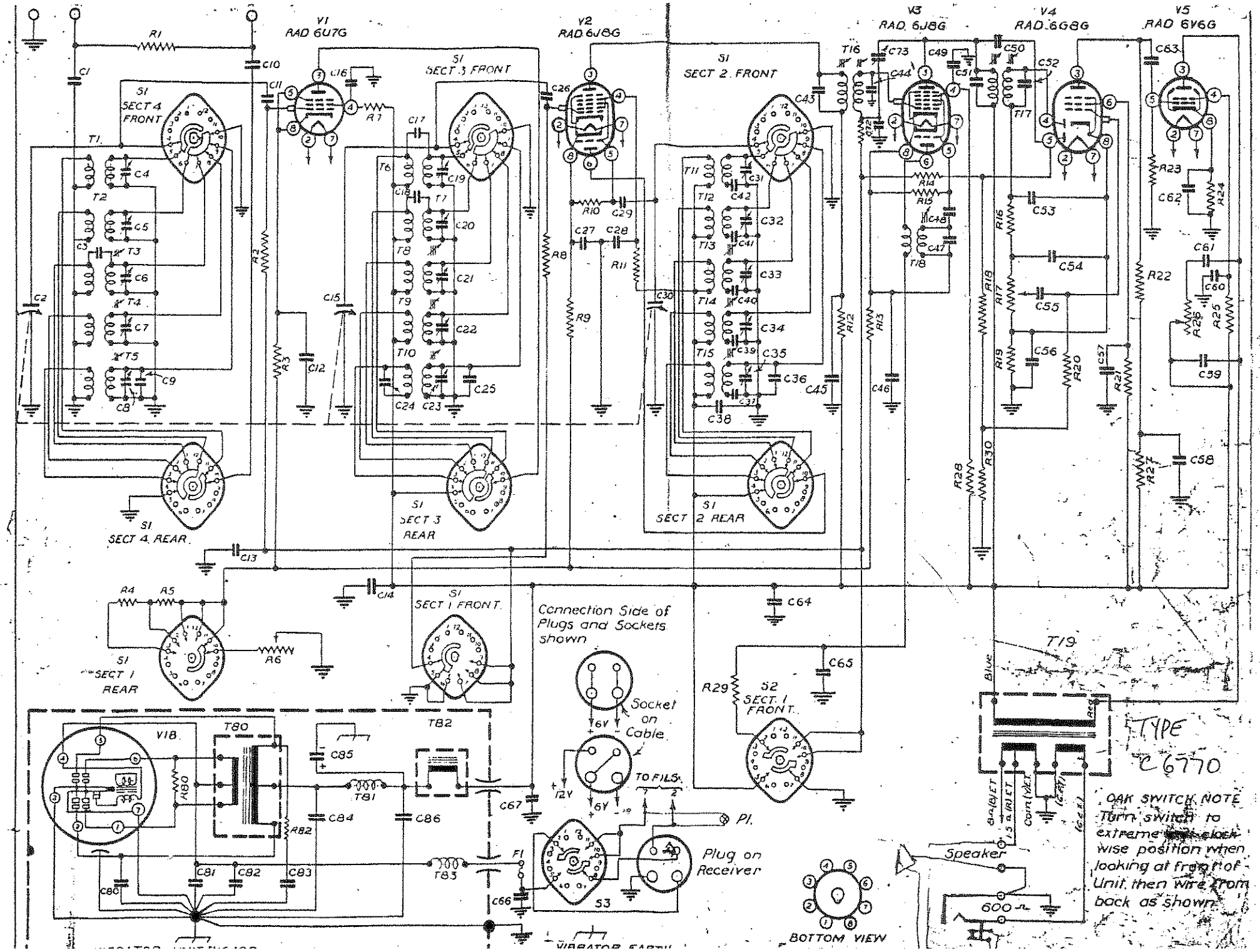
V1
RAD 6U7G
V2
RAD 6J8G
V3
RAD 6J8G
V4
RAD 6G8G
V5
RAD 6V6G
S1
SECT 4
FRONT
S1
SECT 3 FRONT
S1
SECT 2. FRONT
S1
SECT 4 REAR
S1
SECT 3
REAR
S1
SECT 2 REAR
S1
SECT 1 FRONT
S1
SECT 1
REAR
S2
SECT. 1
FRONT
Connection Side of
Plugs and Sockets
shown
Socket
on
Cable
TO FILS.
Pl.
Plug on
Receiver
S3
V18
T80
T81
T82
T83
BOTTOM VIEW
Speaker
600 Ω
T19
Blue
TYPE
C6770
OAK SWITCH NOTE
Turn switch to
extreme ~~anti clock~~
wise position when
looking at front of
Unit, then wire from
back as shown.

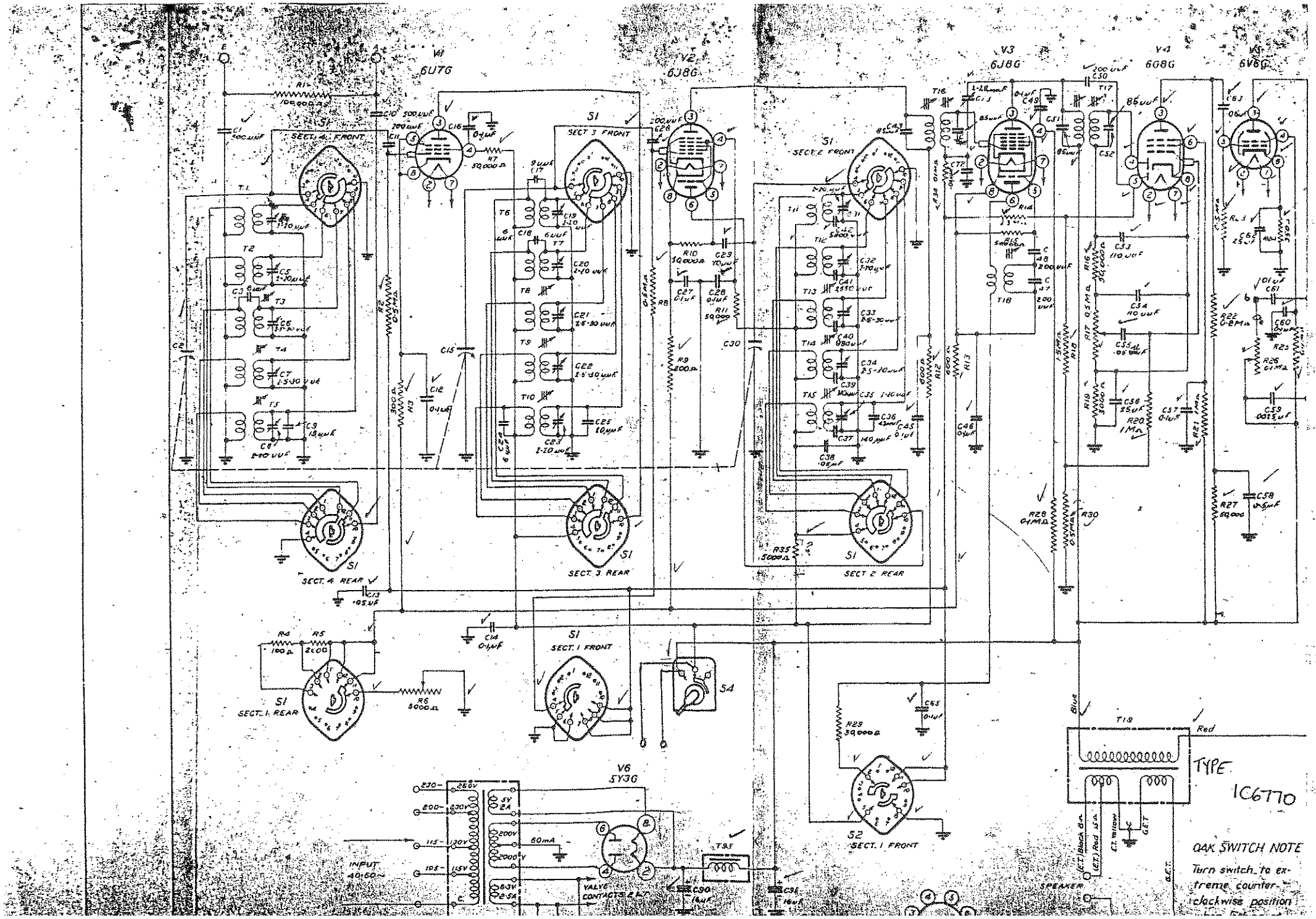
V1
6U7G
V2
6J8G
V3
6J8G
V4
6G8G
V5
6V6
V6
5Y3G
S1
SECT. 4 FRONT
SECT. 3 FRONT
SECT. 2 FRONT
SECT. 4 REAR
SECT. 3 REAR
SECT. 2 REAR
SECT. 1 REAR
SECT. 1 FRONT
S4
S2
T19
TYPE
1C6770
INPUT
40-60~
VALVE CONTACTS
SPEAKER
OAK SWITCH NOTE
Turn switch to extreme counter-clockwise position

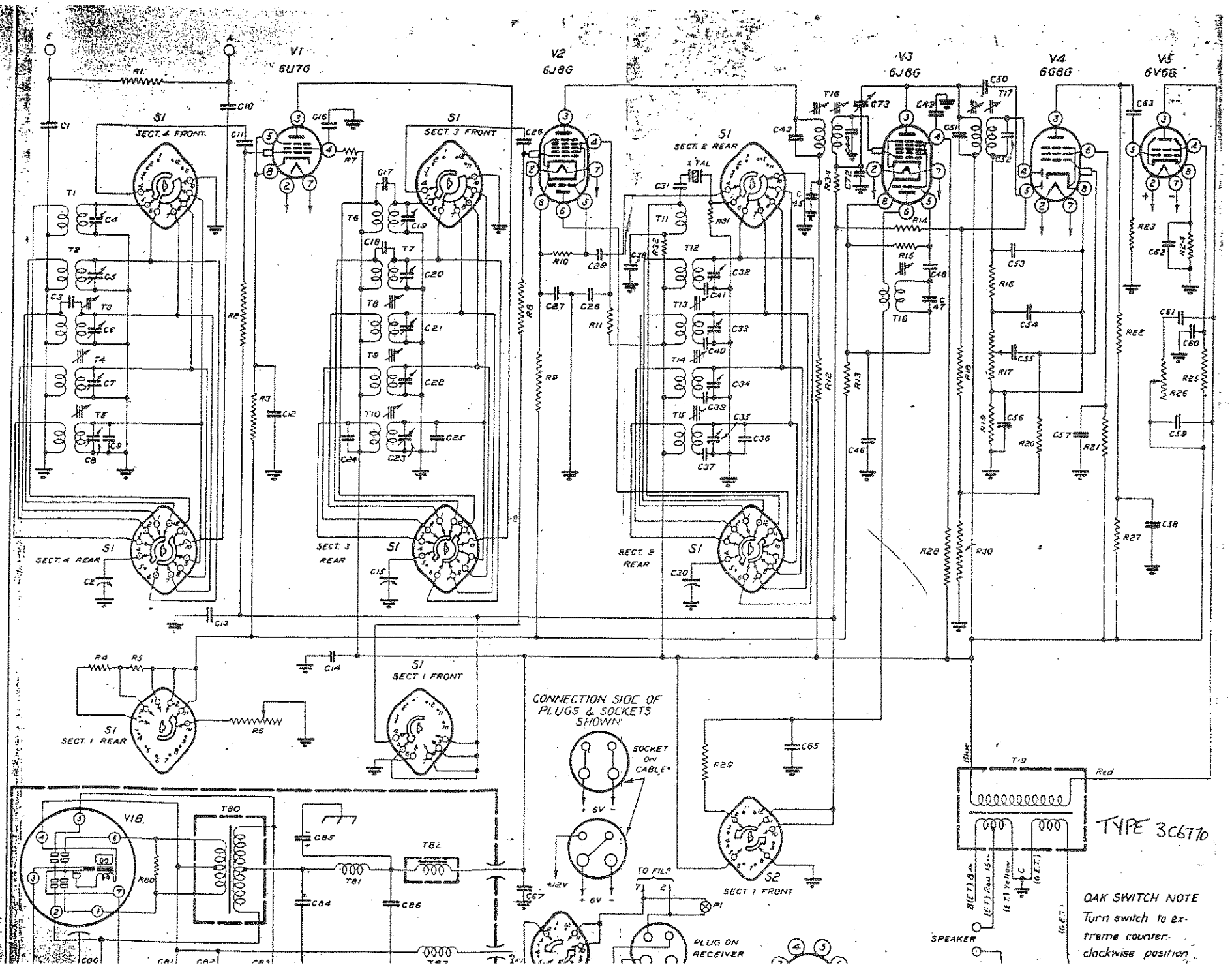
V1
6U7G
V2
6J8G
V3
6J8G
V4
6G8G
V5
6V6G
S1
SECT. 4 FRONT
SECT. 3 FRONT
SECT. 2 REAR
SECT. 4 REAR
SECT. 3 REAR
SECT. 2 REAR
SECT. 1 REAR
SECT. 1 FRONT
X TAL
CONNECTION SIDE OF PLUGS & SOCKETS SHOWN
SOCKET ON CABLE
PLUG ON RECEIVER
TO FILS
S2
SECT. 1 FRONT
V1B.
T80
T81
T82
T19
Blue
Red
SPEAKER
TYPE 3C6770
OAK SWITCH NOTE
Turn switch to extreme counter-clockwise position

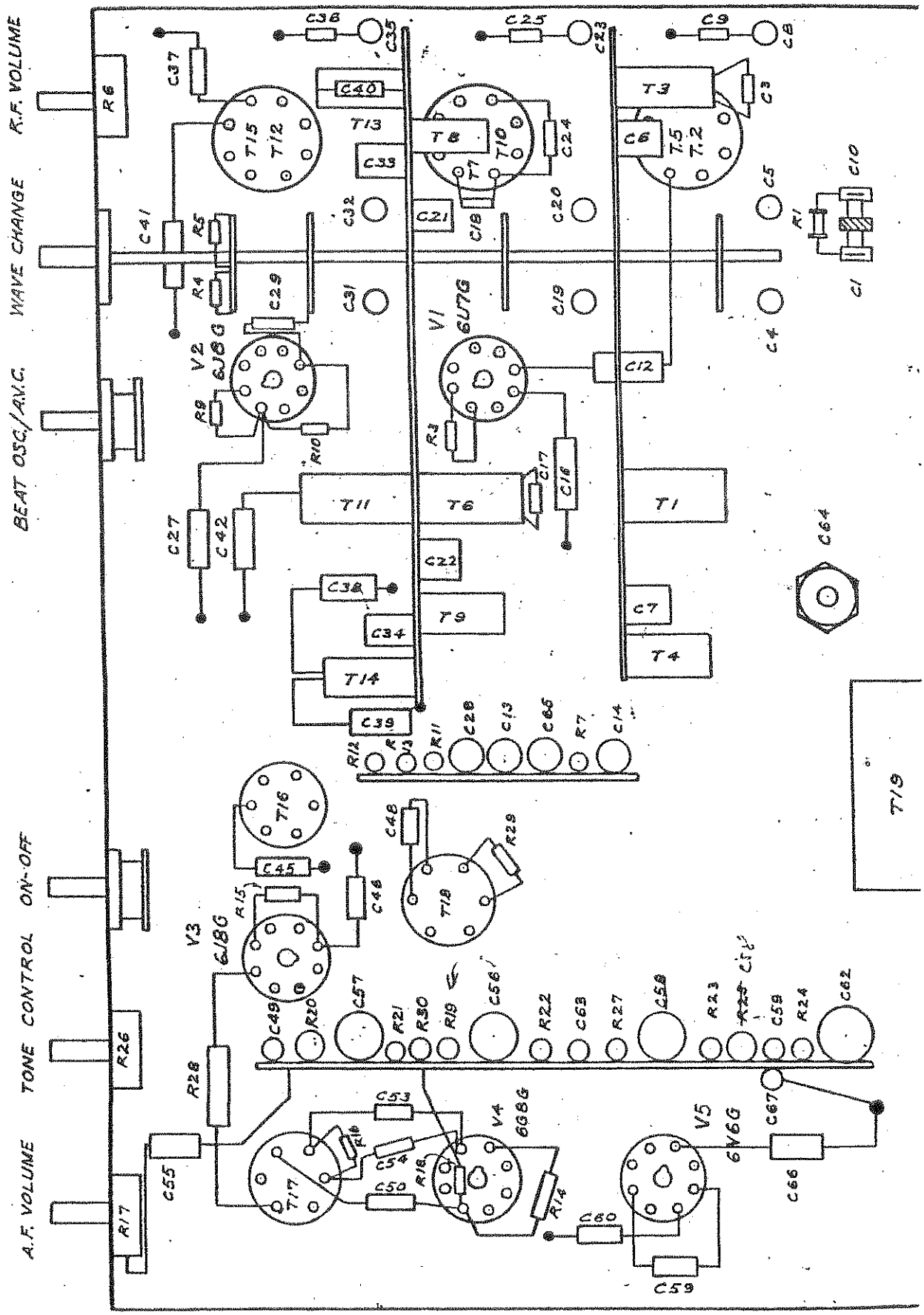

FIG. VII

AMALGAMATED WIRELESS (AUSTRALASIA) LTD. - SYDNEY	REF		1ST SHEET REF 1 2 3 4 5
LAYOUT OF COMPONENTS UNDERSIDE VIEW 5 BAND SUPERHETERODYNE	ARGT.	J. STABB	24.4.40
	DRN.	J. STABB	24.4.40
	TRCD		
	CKD.	J.B. STACY	24.4.40

TYPE C6770 3C6770

DRG C7700

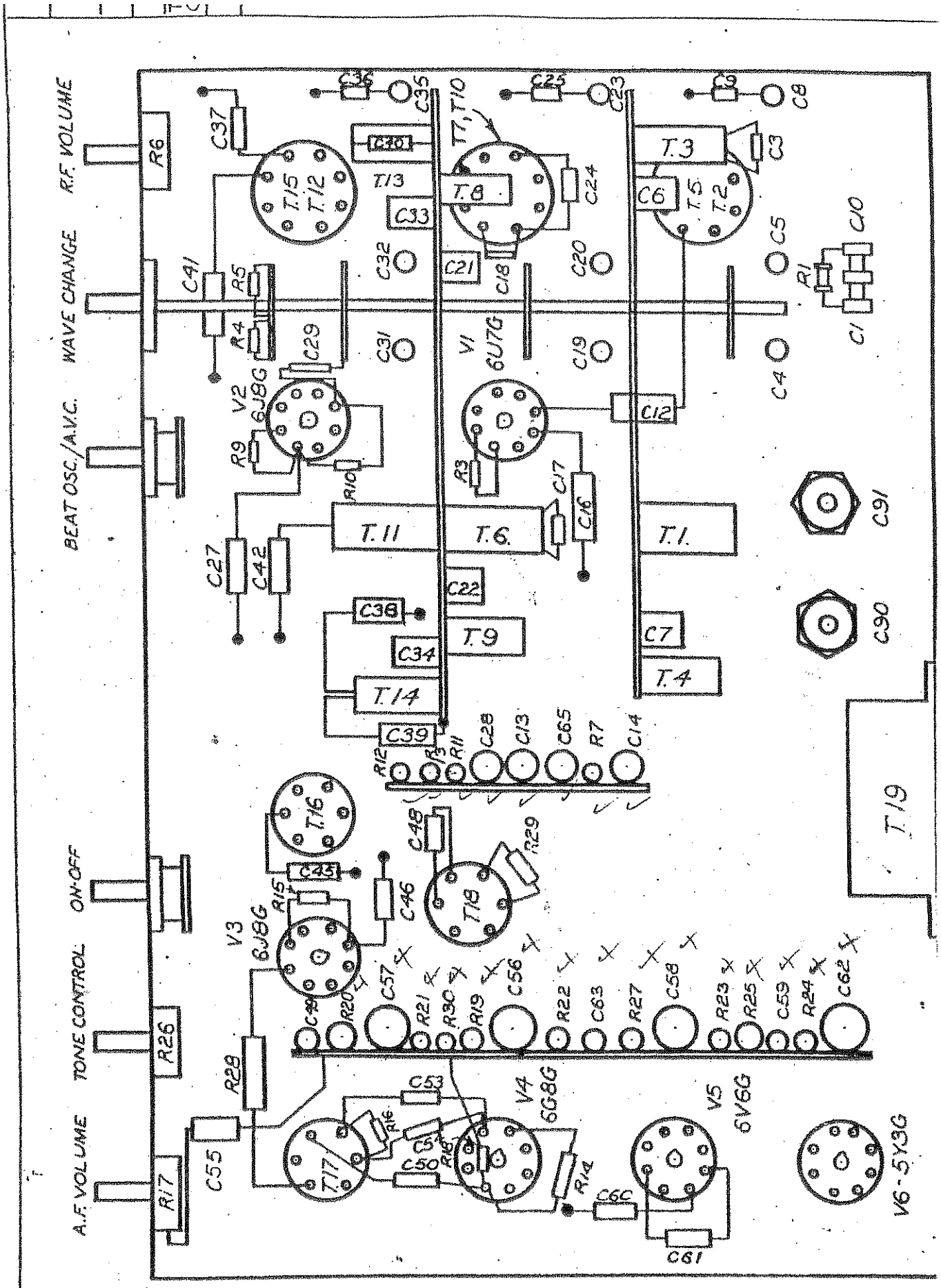

AMALGAMATED WIRELESS
(AUSTRALASIA) LTD. - SYDNEY

LAYOUT OF COMPONENTS
UNDERSIDE VIEW
5 BAND SUPERHETERODYNE

REF.			1ST SHEET REF.
ARGT.		1/15	
DRN.	J Stubbings	15 4 40	TYPE IC677C
TRCD.	J Stubbings	15 4 40	
CKD.	J.B. Stacey	24 4 40	DDO C770D

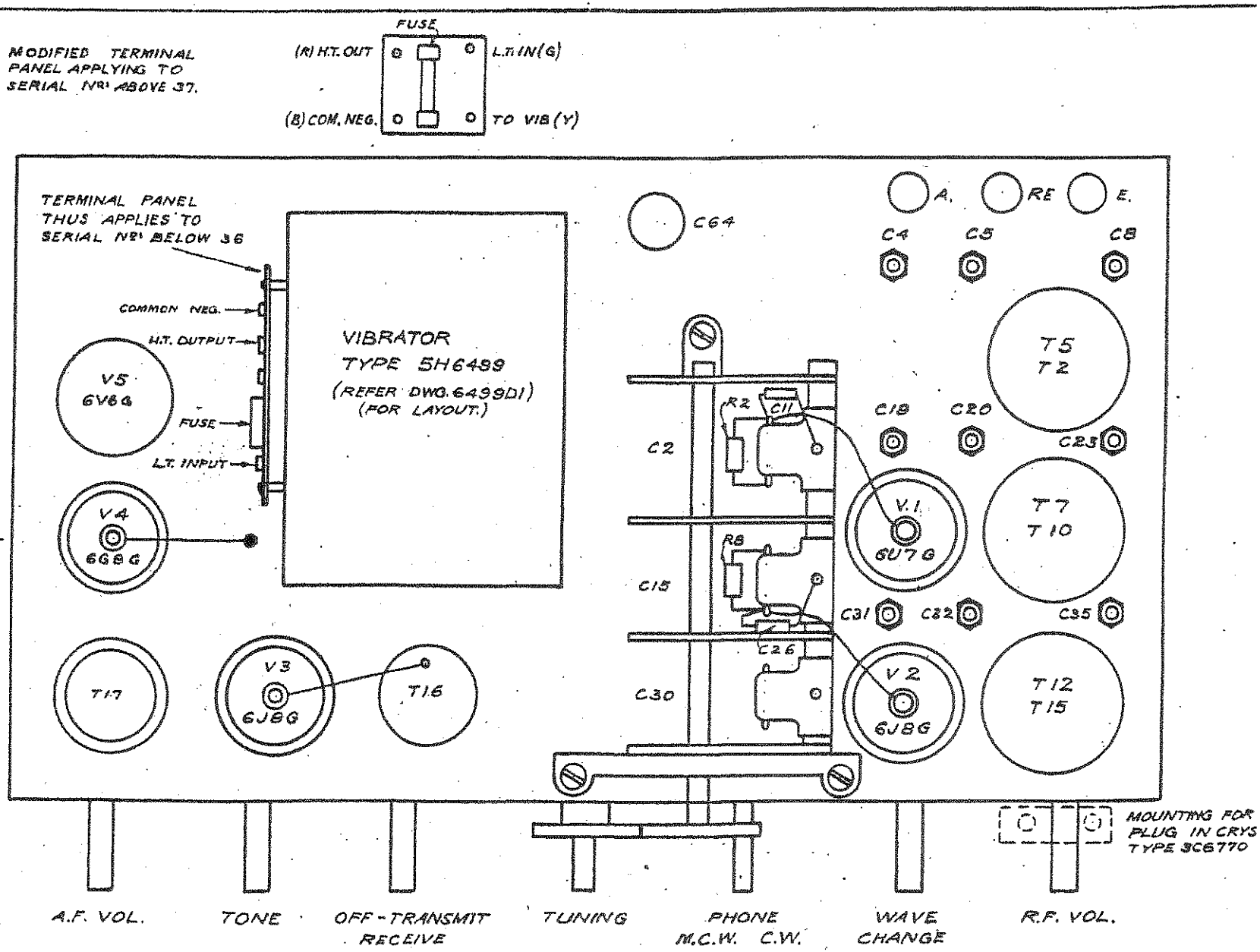

AMALGAMATED WIRELESS (AUSTRALASIA) LTD. - SYDNEY

LAYOUT OF COMPONENTS PLAN VIEW 5 BAND SUPERHETERODYNE RECEIVER

REF.	ARGT.	DRN.	TRCD.	CKD.
	J STAGG	J. STAGG		J.B. STACEY
	R4 & 46	R4 & 46		2-4-46

1ST SHEET REF.

TYPE C6770 3C6770

DRG 677002

FIG. VII

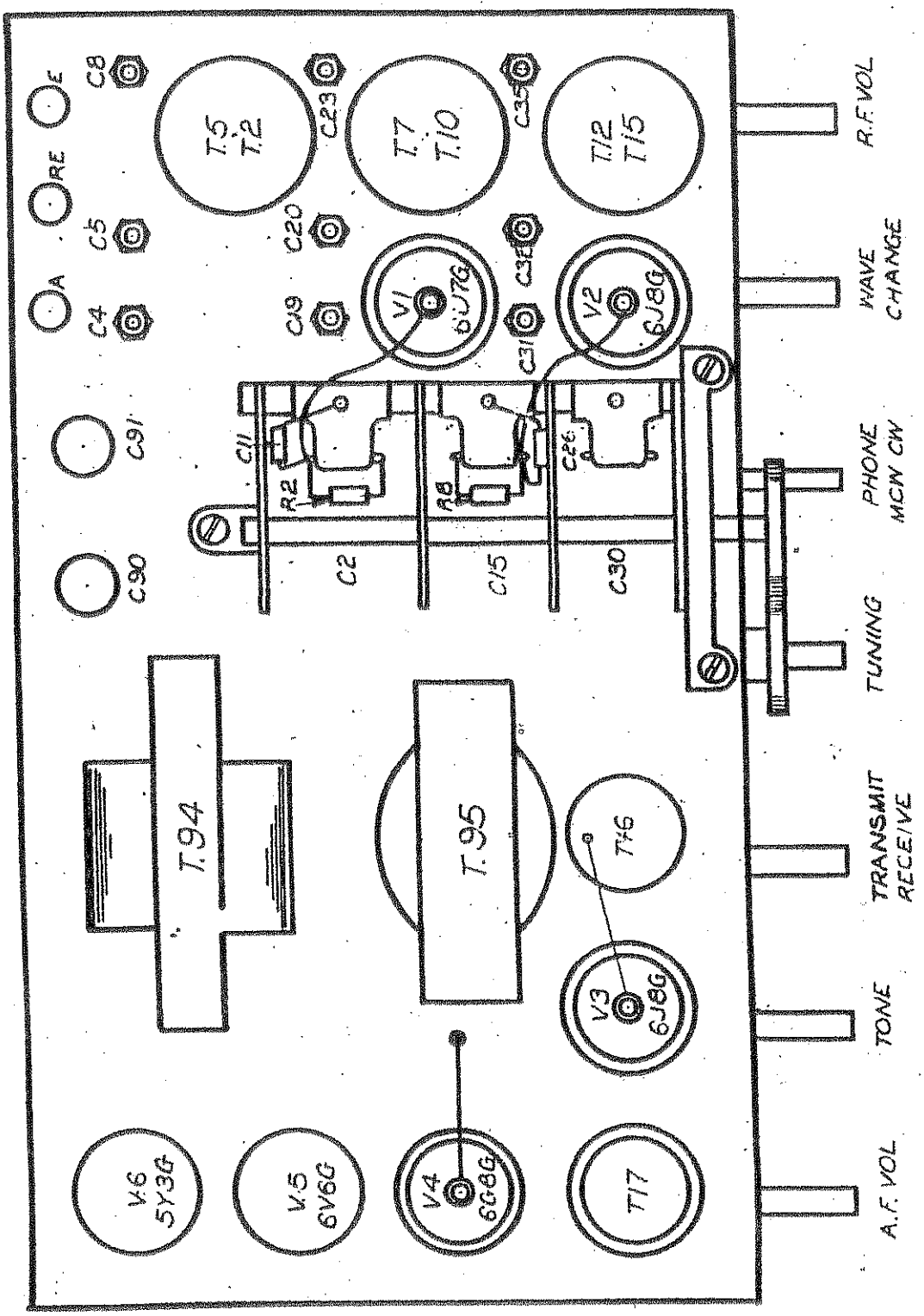

AMALGAMATED WIRELESS (AUSTRALASIA) LTD. - SYDNEY

LAYOUT OF COMPONENTS
PLAN VIEW
5 BAND SUPERHETERODYNE

REF.		
ARGT.		8/1/35
DRN.	J. Stubbings	16/4/40
TRCD.	J. Stubbings	16/4/40
CKD.	J.B. Stacey	24/4/40

1st. SHEET REF.

TYPE IC67

DRG 6776

FIG IX
REFER RECEIVER CIRCUIT
C6770 SERIES, FOR SCHEM.DIA

AMALGAMATED WIRELESS (AUSTRALASIA) LTD. - SYDNEY	REF.			1ST SHEET REF.	1	2	3	4	5	6		
	ARGT.	J. STABB.										
LAYOUT OF COMPONENTS VIBRATOR POWER UNIT	DRN.	J. STUBBING.		TYPE H6499								
	TRCD.											
	CKD.	J. STACY		DRG.								