ROHDE&SCHWARZ

Measuring Instruments
and Systems Division

Service manual

RADIOCOMMUNICATION TESTER CMT

802.2020.52
802.2020.54

VOLUME 1

The service manual consists of 2 volumes

Printed in the Federal
Republic of Germany

Contents of CMT Manual

Operating manual

Service manual

Volume 1

Volume 2

Table of Contents

Contents

5 Service Manual for the Individual Modules

General

Serial data transmission to the individual plug-in modules takes place on three lines: CLOCK, DATA and STROBE. The data must be read in using an external controller, e.g. PUC, in order to adjust or test the modules independent of the basic instrument.

The timing diagram for data transmission is shown below.

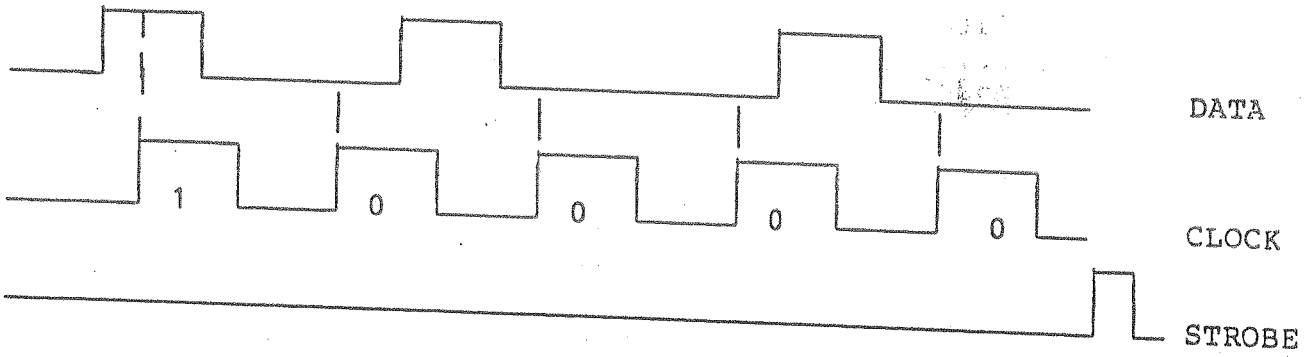

The data on the DATA line are transferred to the parallel/serial converter with each rising edge of the CLOCK pulses; a subsequent STROBE pulse enables the data at the converter outputs. The following BASIC program shows how the user port of the PUC can address the module:

```
10 POKE 59259,255          Set user port
20 DIM A(20)               Number of individual data bits,
                           20 in this case
30 A(1)=0:A(2)=1...        Define individual data

40 FOR I=1T020
50 POKE 59471,A(I)         Read in data;
60 POKE 59471,A(I)+2       Line with significance 2^0 = DATA,

70 NEXT                    significance 2^1 = CLOCK

80 POKE 59471,4            Output of STROBE pulse on line
90 POKE 59471,0:END        with significance 2^2
```

4 Service Manual for Complete Instrument

(See circuit diagram 802.2020 S)

4.1 Function Description

4.1.1 RF Synthesizer

The RF synthesizer with frequency modulation generates RF frequencies in the range from 500 to 1000 MHz which is covered by three selectable oscillators. Three linked phase locked loops (PLL) produce the resolution required for the frequency setting. The main reference is a 10-MHz crystal oscillator (temperature-stabilized as option) to which a 100-MHz crystal oscillator is linked. The 100-MHz frequency is divided per program and produces the reference frequency for a crystal oscillator which can be adjusted by ±2 kHz and whose frequency, divided by a factor of 100, is the reference frequency for the coarse PLL of the RF oscillators.

If the Duplex Modulation Meter option CM-B9 is not fitted, the RF synthesizer is operated as a generator in the receiver test and as a mixing oscillator in the transmitter test. Information on voltages and on the locking of the PLLs is passed to the controller via the analog unit for test purposes and for troubleshooting.

4.1.2 Output Stage

The output stage divides the frequencies provided by the RF synthesizer such that a frequency range of 31.25 to 1000 MHz is covered. Appropriate filters are connected in series with the frequency dividers to ensure that the harmonics ratio required is attained. Frequencies <31.25 MHz are generated by mixing the 100-MHz crystal frequency with a corresponding oscillator frequency.

A controlled amplifier increases the RF signal to the max. level of 13 dBm. Fine variation of the level is achieved by modifying the reference input for the control via D/A converters. Amplitude modulation is also active and the modulation signal is superimposed on the reference value of the D/A converter.

4.1.3 1st Modulation Generator

The AF synthesizer and the modulation controller are accommodated on the 1st modulation generator module. The AF synthesizer is basically a set of shift registers whose outputs are activated in succession by a clock generated by the controller.

The output levels are added by a resistor chain to give a sine curve. The stepped sinewave produced is freed from harmonics by suitable filters and output following an attenuation set consisting of D/A converters and selectable voltage attenuators.

The modulation controller divides the level provided by the modulation generator into AM and FM paths. D/A converters are used to achieve the setting accuracy required for modulation. ΦM is enabled by a corresponding filter in the FM branch.

The signal applied to connector MOD. EXT. is routed to the analog unit module for calibration where its level is measured and the connected amplifier is adjusted to the modulation controller according to the result.

4.1.4 Analog Unit

The analog unit consists of the following function units: RF amplifier, LO conditioning, demodulators, AF conditioning and DC amplifier.

The RF signals to be measured are regulated to a constant level in the RF amplifier according to the type of modulation and then routed to the RF frequency counter and the mixer.

The LO conditioning amplifies the signals from the output stage to the level required for the mixer. Frequencies below 31.25 MHz are divided to generate the IF of 455 kHz for signal frequencies up to approx. 1 MHz. A generator with amplitude modulation is integrated for self-testing.

The demodulators contain the IF amplifiers, the AM and FM/ΦM demodulators and filters required to suppress the IF.

The AF conditioning weights the demodulated signal and the signal from the AF VOLTM input according to the measuring requirements; various filters (300-Hz HP, CCITT filter, 150-Hz HP) can be connected as required (rms or peak values). The signal to be measured is regulated to a constant rms value for distortion measurements and subsequently freed from the wanted signal in a notch filter.

The rectifiers (peak value and rms value rectifiers) are contained in the DC amplifier. A DC multiplexer connects the voltages supplied by the other modules to a selectable DC amplifier which passes the signal to the A/C converter incorporated in the digital unit.

4.1.5 Digital Unit

The digital unit consists of the following function units: RF counter, AF counter, A/D converter and controller.

The RF counter counts the frequency of the applied RF signal in the range from 1 to 1000 MHz. The setting of the RF synthesizer to generate the LO frequency required for demodulation is obtained from the counter result.

The AF counter counts the frequency of the demodulated signal as well as signals in the range from 10 Hz to 500 kHz applied to input AF VOLTM.

The controller controls the complete instrument. All data to the individual modules are applied via serial data lines (CLOCK, DATA, STROBE). Power fail logic with an additional battery voltage ensures that the data are not lost upon power failure or when the instrument is switched off.

4.1.6 Power Pack

The power pack supplies the instrument with the operating voltages of +5 V, +12 V, +15 V, -15 V and +24 V. The voltages are generated using a switched-mode power supply so that the instrument can also be operated using standard car batteries. When connected to the AC power supply, a transformer reduces the line voltage to the voltage required for the switched-mode power supply.

The instrument operates in STANDBY mode if the power pack is switched off from the front panel; all voltages are then switched off except the +12 V supply which is used for the 10-MHz crystal oven and the STANDBY logic.

Fuses are provided on the input side to protect the power pack. STANDBY mode is automatically switched on if one or more voltages on the secondary side are short-circuited with each other or to ground or if the power pack is operated without a secondary load.

4.1.7 Front Panel

All keys required to operate the instrument as well as the loudspeaker potentiometer and the spin wheel for fast adjustment of the parameters are located on the front panel.

The set parameters and the results are output on LCDs connected to the front panel via conductive rubber contacts. The loudspeaker amplifier is also mounted on the front panel with the loudspeaker control. A ribbon cable connects the front panel units to the motherboard and the digital unit.

4.1.8 Attenuation Set

The attenuation set contains the attenuator connected to relays for attenuating the RF synthesizer level as well as power attenuators in which the major part of the applied power is converted into heat. The connection between the power attenuators and the other attenuators is made via a 50-Ω star arrangement to which the power diode, the analog unit and the RF-30 dB output/input on the rear panel are connected.

Corresponding RF diodes are integrated to protect the attenuation set during mechanical switching and to detect power. A PCB screwed onto the attenuation set drives the attenuation set and evaluates the voltages from the diodes. The PCB is connected to the motherboard via a ribbon cable.

4.1.9 Oscilloscope

The oscilloscope enables visual display of the demodulated signals, the beat signal and externally applied signals.

The voltages required for the oscilloscope tube, the blanking amplifier and the deflection amplifier are generated by a switched-mode power pack with an operating voltage of 24 V. The deflection coefficients and the operating mode are read from the digital unit into RAMs, read out by D/A converters and written as Lissajous figures on the screen in the form of numbers, letters and arrows. The oscilloscope is powered via ribbon cables which are routed to the front panel.

4.1.10 Options

The function descriptions of the options are contained in the respective service manuals (Section 5).

4.2 Mechanical Design

Except for the front panel, power pack, attenuation set and oscilloscope, the CMT modules are designed as plug-in cards. Repairs can therefore be carried out rapidly or the faulty card can be completely replaced.

The electric connections are made via the common motherboard. Sensitive signals are routed via plug-in or screw-on coaxial connections. The connections from the power pack, front panel, attenuation set and oscilloscope to the other modules are made via plug-on ribbon cables.

A blower is provided at the rear to cool the modules. The air is sucked through the perforations at the side and blown out via the rear panel.

4.2.1 Opening the Instrument

Loosen the four Phillips screws at the rear used to secure the feet (marked A in Fig. 4-1); the captive screws remain in the feet. Remove the feet and slide out the top and bottom panels to the rear.

Caution: The power plug must be disconnected before removing the modules.

4.2.2 Removing Plug-in Modules

These modules are secured by two rails at the sides next to the motherboard. Loosen the Phillips screws marked A in Fig. 4-2 and press towards the rear using a suitable tool inserted into bracket B. Disconnect any coaxial and ribbon cables present and remove the modules from the instrument.

Note: If the IEC Bus/Control Interface option CM-B4 and the Autorun Control/Printer Interface option CM-B5 are present, these must be removed before removing the digital unit module (see Section 4.2.4).

4.2.3 Removing the Power Pack

Disconnect plugs X60, X61 and X70 from the motherboard. Loosen the five Phillips screws marked C and D in Fig. 4-1 and remove the power pack from the frame. Ensure that the cables leading from the power pack are not subjected to stress which could break the connected lead-through filters.

4.2.4 Removing the IEC Bus/Control Interface Option CM-B4 and the Autorun Control/Printer Interface Option CM-B5

Loosen the Phillips screws on the rear of the instrument (marked D and E in Fig. 4-1) and remove the option(s) towards the rear from the multiple connectors of the digital unit.

4.2.5 Removing the Attenuation Set

Unscrew the two SMA connectors from the cables with a solid jacket and pull off the two coaxial connectors.

The attenuation set with the heat sink is mounted to the chassis by four screws, two of which are fitted with nuts (marked C in Fig. 4-2). Loosen the screws and remove the attenuation set with the heat sink.

The drive board is fitted on the attenuation set using six screws. Before removing the board, desolder the two wires to the overtemperature sensor.

Note: The attenuation set must not be opened; the internal components consist of thin-film substrates which can only be replaced in the factory.

4.2.6 Removing the Oscilloscope

Loosen the hexagon socket screws of the rotary knobs on the front panel and remove the knobs. Loosen the six screws with which the inscription panel is secured (two screws in the centre between the displays). Loosen the screws marked A in Fig. 4-3. Disconnect the two ribbon cable plugs and the coaxial connector X605 from the analog unit module. The oscilloscope assembly can now be removed from the front.

4.2.7 Removing the Front Panel

Remove the inscription panel as described in Section 4.2.6 and loosen the screws marked B in Fig. 4-3. Disconnect the three ribbon cable connectors and remove the front panel.

Figs. 4-1 to 4-3 show the screws to be loosened to remove the modules.

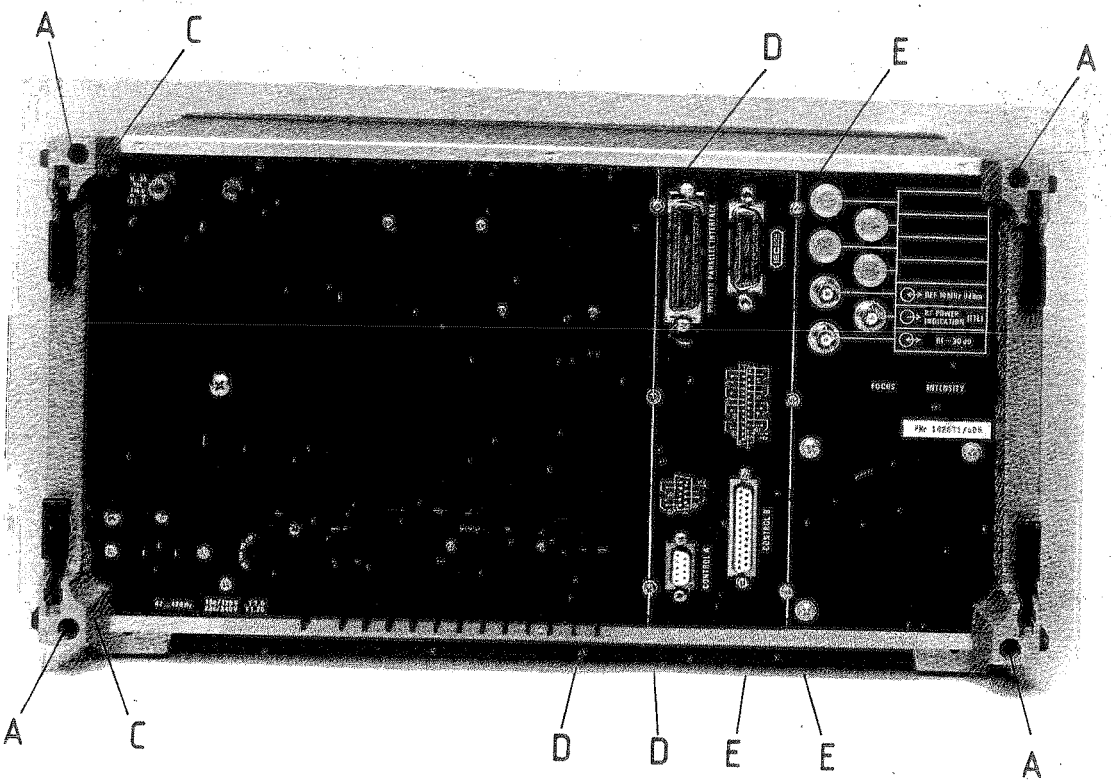

Fig. 4-1

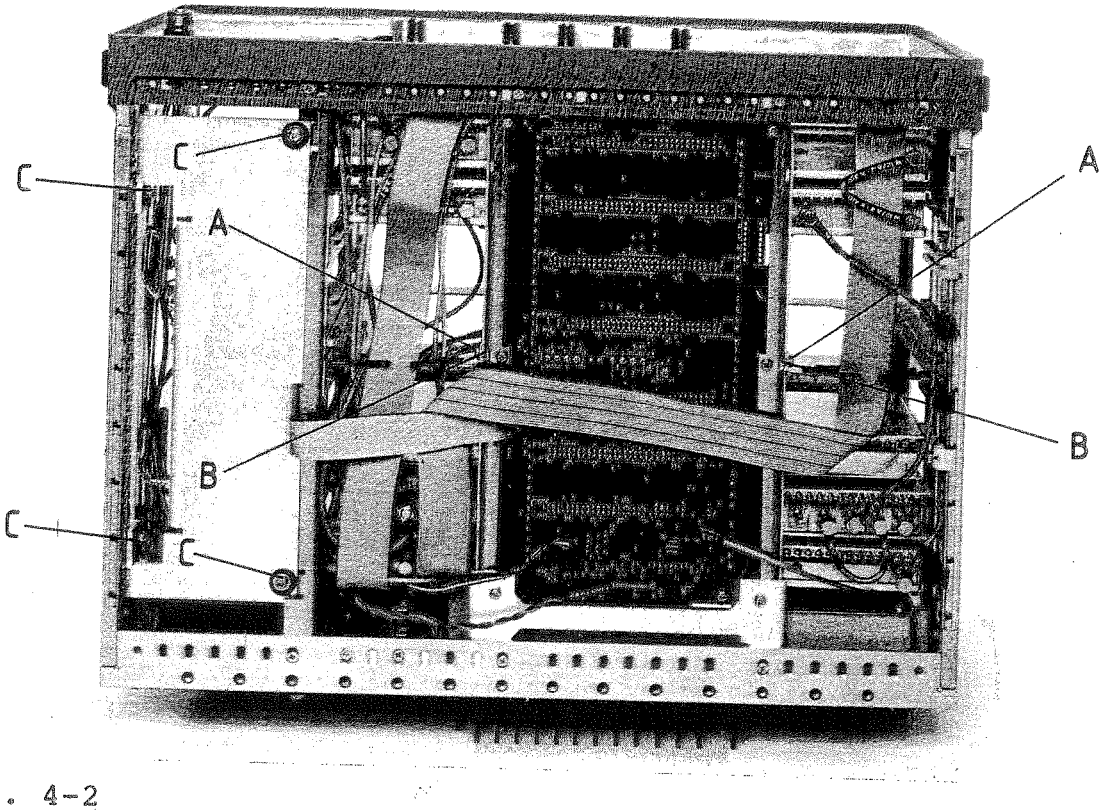

Fig. 4-2

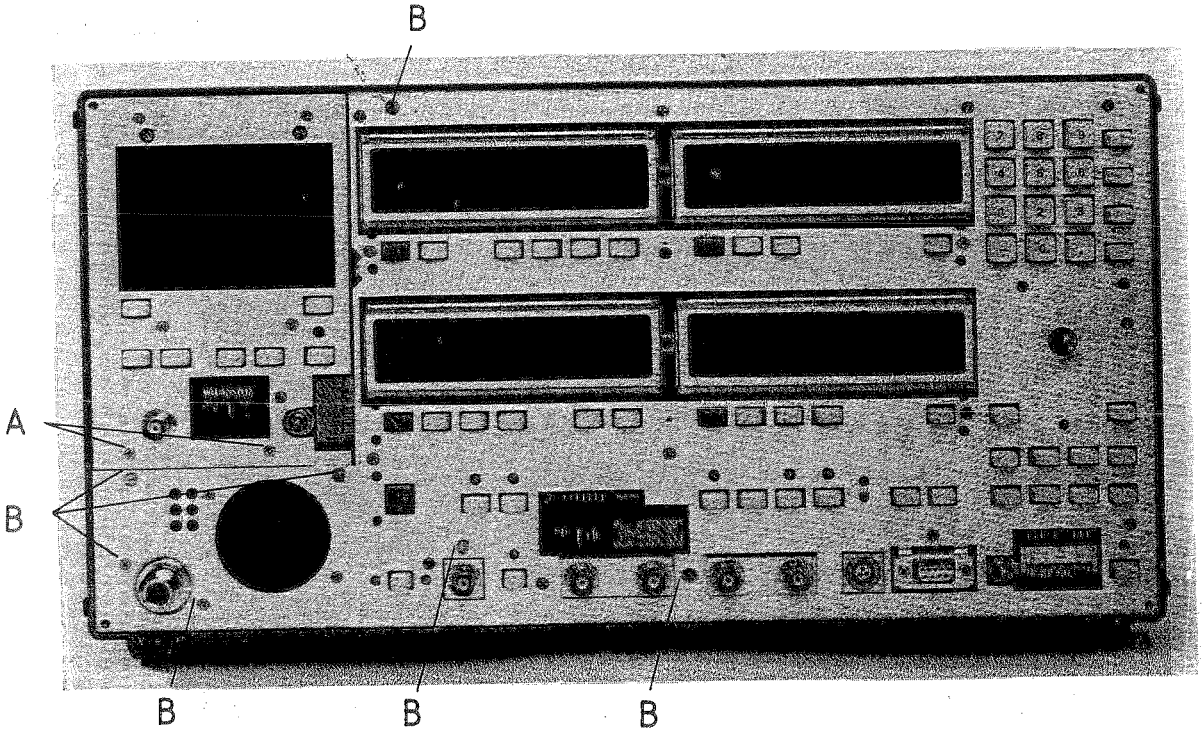

Fig. 4-3

4.3 Testing and Adjustment

Exact testing of the instrument specifications should be carried out according to Section 3.2 in the Operating Manual. Each test in the manual refers to a possible adjustment. Renewed testing is therefore necessary following adjustments.

Some adjustments on the CMT can be carried out without using the adapter cable; where required, this is clearly indicated.

Before carrying out any adjustments, ensure that the appropriate control element is about to be used; unintentional adjustment of set values can lead to large measurement errors.

All modules should be inserted or connected when an adjustment is carried out. If a module must be adjusted outside the instruments or if a fundamental unit is missing (e.g. digital unit), carry out the adjustment as described in Section 5.

The sequence of adjustments from module to module and also within modules ensures that the adjustments do not affect one another; if this is nevertheless possible, reference is made to the previously required setting.

4.3.1 Adjusting the Power Pack

4.3.1.1 +5 V Operating Voltage

Setting: → Switch on instrument

Adjustment point: → X61 on motherboard

Adjustment value: → Adjust to 5.3 V ±10 mV using R12

4.3.1.2 +24 V Operating Voltage

Setting: → Switch on instrument

Adjustment point: → X61 on motherboard

Adjustment value: → Adjust to 24 V +100 mV/-0 mV using R56

4.3.2 Adjusting the Digital Unit

Setting: → Switch on instrument

Adjustment point: → X58/A21 on motherboard

Adjustment value: → Adjust to 10 V ±1 mV using R109

4.3.3 Adjusting the RF Oscillator

→ Pull out module and connect to the CMT using the adapter cable.

→ Open module.

4.3.3.1 Frequency Adjustment

Settings: → Receiver test
→ Frequencies as in following table:

Frequency	Trimmer
500.001 MHz	C21
655.001 MHz	C51
825.001 MHz	C81

Adjustment point: → X9/2

Adjustment value: → Adjust to 2.5 V DC ±100 mV using C21, C51, C81

4.3.3.2 Level Adjustment

Settings: → Receiver test
→ Frequencies as in following table:

Frequency	Trimmer
575 MHz	R49
730 MHz	R79
900 MHz	R109

Adjustment point: → X310

Adjustment value: → Adjust to 0 dBm ±3 dB using R49, R79, R109

4.3.4 Adjusting the Output Stage

Note: Check adjustment 4.3.3.2 before adjusting the output stage.

Remove the module from the CMT and connect using the adapter cable. The module need not be opened for the adjustment.

4.3.4.1 Level Adjustments

Settings:

→ Receiver test
→ Frequencies as in following table
→ Set required level
* Set level via hand wheel

Frequency	Level	Trimmer	Adjustment value
100 MHz	+13 dBm	R514	13 dBm ±0.05 dB
* 100 MHz	-16.9 dBm	R452	-6.9 dBm ±0.05 dB
7.9 MHz	+13 dBm	R641	13 dBm ±0.05 dB
* 7.9 MHz	-16.9 dBm	R663	-6.9 dBm ±0.05 dB

Adjustment point: → X401 or RF IN/OUT on the front panel

Compare level of 13 dBm at 1 GHz and 330 MHz and take the average using R514.

4.3.4.2 Adjusting the Modulation Depth

Settings:

→ Receiver test
→ Frequency 100 MHz
→ Level 0.1 dBm
→ Modulation 80% AM
→ AF = 1 kHz

Adjustment point: → X401 or RF IN/OUT on the front panel

Adjustment value: → Adjust to 80% AM ±0.1% AM using R503

4.3.5 Adjusting the Analog Unit

→ Remove the module from the CMT and connect using the adapter cables.

→ Open module.

4.3.5.1 Adjusting the LO Conditioning

Settings:
- Transmitter test
- Fixed frequency 15 MHz

Adjustment point:
- D100/3

Adjustment value:
- Adjust to TTL level using R102
- Check at P30 whether TTL level is present at half frequency

4.3.5.2 Adjusting the RF Amplifier, FM

Settings:
- Transmitter test
- Apply 500 MHz, 20 mV to INPUT2
- Demodulation: FM

Adjustment point:
- X610/50 Ω

Adjustment value:
- Adjust to 150 mV ±5 mV using R87

4.3.5.3 Adjusting the RF Amplifier, AM

Note: The adjustment 4.3.5.2 must be checked before this adjustment.

Settings:
- Transmitter test
- Apply 500 MHz, 20 mV to INPUT2
- Demodulation: AM

Adjustment point:
- X610/50 Ω

Adjustment value:
- Adjust to 75 mV ±5 mV using R88

4.3.5.4 Adjusting the FM Demodulator

Settings:
- Transmitter test
- Apply 100 MHz, 20 mV, 10 kHz deviation to INPUT2
- Demodulation: FM, $\pm \frac{PK}{2}$

Adjustment point:
- DEMODULATION display

Adjustment value:
- Adjust to 10 kHz ±10 Hz using R304
- Adjust to 0 V_{DC} ±5 mV at DEMOD connector using R213

4.3.5.5 Adjusting the AM Demodulator

Note: Check adjustment 4.3.5.4 before this adjustment. The following three adjustments mutually affect one another; adjust in the specified sequence and check again at the end.

Settings:
- → Transmitter test 100 MHz
- → Apply 100 MHz, 10 mV, 80% AM, AF 1 kHz to INPUT2
- → Demodulation: AM, $\pm \frac{PK}{2}$

Adjustment point 1: → D680/1

Adjustment value 1: → Adjust to 250 mV ±2 mV using R197 (take settling time into account)

Adjustment point 2: → DEMOD connector

Adjustment value 2: → Adjust to minimum limitation of lower sine half-wave using R254

Adjustment point 3: → DEMODULATION display

Adjustment value 3: → Adjust to 80% ±0.1% using R275 (take settling time into account)

4.3.5.6 Adjusting the CCITT Filter

Settings:
- → Receiver test
- → Apply 1 V_{rms}, 800 Hz to AF VOLTM
- → Press CCITT

Adjustment point: → AF VOLTMETER display

Adjustment value: → Adjust to 1 V ±10 mV using R388

Check: → When pressing CCITT again (off), the display must not change.

Note: → The rms meter should be calibrated prior to this adjustment.

4.3.5.7 Adjusting the Distortion Control

Note: The following two adjustments mutually affect one another. Check the adjustments at the end and correct if necessary.

Settings:
- Receiver test
- Apply 1 V_{rms}, 1 kHz to AF VOLTM

Adjustment point 1: → X23/1

Adjustment value 1: → Adjust to 1 V_{rms} ±1 mV using R543

Adjustment point 2: → N450/1

Adjustment value 2: → Adjust to pure $\sin^2$ using R542

4.3.5.8 Adjusting the 1-kHz Notch Filter

Settings:
- Receiver test
- Apply 1 kHz, 1 V_{rms} with low distortion (<0.01%) to AF VOLTM
- Press DIST

Adjustment point: → AF VOLTMETER display

Adjustment value: → Alternately adjust to minimum distortion (<0.3%) using R557 and R556

4.3.5.9 Adjusting the 990-Hz Notch Filter

Settings:
- Receiver test
- Apply 1 V_{rms}, 990 Hz with low distortion (<0.01%) to AF VOLTM
- Press DIST

Adjustment point: → AF VOLTMETER display

Adjustment value: → Adjust to minimum distortion (<0.3%) using R566

4.3.5.10 Adjusting the 1010-Hz Notch Filter

Settings:
- → Receiver test
- → Apply 1 V_{rms}, 1010 Hz with low distortion (<0.01%) to AF VOLTM
- → Press DIST

Adjustment point: → AF VOLTMETER display

Adjustment value: → Adjust to minimum distortion (<0.3%) using R571

4.3.5.11 Adjusting the Power Display

Settings:
- → Transmitter test
- → Apply a defined power = 10 W to RF IN/OUT

Adjustment point: → RF POWER display

Adjustment value: → Adjust to 10.2 W using R672

4.3.6 Adjusting the Attenuation Set

Settings:
- → Receiver test
- → Frequency 100 MHz
- → Level 13 dBm

Adjustment point: → RF LEVEL display

Adjustment value: → Rotate R34 until the attenuation set is heard to switch and -47 dBm is output on the display; subsequently rotate R34 approx. 1/6 revolution backwards

Note: Check the switchover threshold from receiver test to transmitter test following adjustment. The switchover threshold is at 0.35 W, approx. If the threshold is too low, rotate resistor R34 back further.

4.3.7 Adjusting the Oscilloscope

The oscilloscope must first be removed (see Section 4.2.6) and connected using the adapter cable; remove the mu-metal screening of the tube.

Note: When adjusting, ensure that no high-voltage parts are touched.

4.3.7.1 Adjusting the Horizontal Beam Deflection

Setting: → Switch on instrument

Adjustment point: → Graticule

Adjustment value: → After loosening the mounting screws of the tube, align the horizontal beam with the graticule

Note: Magnetic fields can lead to errors during the adjustment and the adjustment should therefore be checked after replacing the tube screen. Refer to the Service Manual, Section 5, for further adjustments.

4.3.8 Options

Adjustment of the options is described in Section 5.

4.4 Troubleshooting

This section provides references to the modules possibly associated with faults.

Note: Modules must not be removed or inserted under power. It is absolutely essential to short X75 on the digital unit after removing the analog unit module and before switching on the power again, since the D/A converter N100 (AD 7520) on the digital unit would otherwise be destroyed.

Fault: The instrument immediately enters STANDBY following power-up.

Plug-in jumper X75
(on digital unit)
inserted ?

Insert plug-in jumper X75

Remove modules,
except digital
unit, in sequence

Faulty module found ?

Power pack faulty,
operating voltage on digital
unit faulty

Short-circuit of
operating voltage(s)

Fault: The instrument does not accept commands from the keyboard

Briefly isolate instrument from power supply and switch on again. Instrument OK ?

- Yes → Reset logic, digital unit
- No ↓

Plug-in jumper X75 (on digital unit) inserted ?

- No → Insert plug-in jumper
- Yes ↓

Remove modules, except digital unit and RF oscillator, in sequence.

Faulty module found ?

- Yes → Data transmission blocked
- No ↓

10-MHz TTL level at X701 (digital unit) ?

- No → RF oscillator
- Yes ↓

Digital unit, cable from front panel to digital unit, front panel

Fault: No demodulation display in transmitter test

Power display OK ?

No → Attenuation set OK ?

Yes → A

Attenuation set OK ?

No → Replace attenuation set

Yes → A

Does RF counter indicate correct frequency ?

No → RF counter (digital unit) RF amplifier (analog unit)

Yes →

Faults only with frequencies <31.25 MHz ?

Yes → LO conditioning (analog unit)

No →

Corresponding frequency to generate IF of 455 kHz (f >32 MHz) present at X608 (analog unit) ?

No → RF oscillator, output stage, duplex modulation meter

Yes →

Demodulated signal at BNC connector DEMOD ?

No → Demodulators (analog unit)

Yes → A

No display of measured values: AF voltmeter, RF voltmeter, demodulation, distortion ?

No → Fault in analog unit (DC amplifier, AF conditioning)

Yes →

A/D converter (digital unit)
DC amplifier (analog unit)

ROHDE & SCHWARZ

Liste mechanischer Teile

List of mechanical parts

Bilder zur Liste mechanischer Teile

Figures pertaining to list of mechanical parts

Liste zu den Bildern 4-10....4-13

List for Figs 4-10...4-13

Lfd. Nr. / No.	Kenn-zeichen / Unit/ Comp.No	Stück-zahl / Qty	Benennung/Beschreibung / Designation	Sachnummer / Stock No.
1		1	MZ Haube oben 5E 1/1 T350 Cover, top	802.2537
2		1	MZ Haube unten 5E 1/1 T350 Cover, bottom	396.3838
3		1	MF Führungsschiene, rechts Guide rail, right	396.4757
4		1	MF Führungsschiene, links Guide rail, left	396.4763
8		2	MF Gerätefuß, vorne Instrument foot, front	396.4534
9		2	MF Aufstellfuß, unten Foot, bottom	396.4540
11		2	ZM Gerätefuß, hinten Instrument foot, rear	396.4586
15		2	MF Seitenleiste T350 Side strip	396.3073
16		4	VS M3x6 DIN 965 A4	081.9378
17		1	ZM Rückwandfuß, links 5E Rear-panel foot, left	802.2337
18		1	ZM Rückwandfuß, rechts 5E Rear-panel foot, right	802.2320
19		4	VS Ansatzschr. M4 K.D7985 Screw	396.4492
21		2	ZM Tragegriff T350 Carrying handle	396.3215
22		4	MR Griffbuchse Washer	396.3321

Lfd. Nr. / No.	Kenn-zeichen / Unit/ Comp.No	Stück-zahl / Qty	Benennung/Beschreibung / Designation	Sachnummer / Stock No.
23		4	VS M4x10 DIN 965 A4	081.9478
24		4	MF Abdeckung, Griffseite Cover, handle side	396.3338
30		1	ZM Frontrahmen 5E 1/1 Front frame	396.2154
31		4	MF Seitenfuß Side foot	396.4692
32		2	MF Stapelnutabdeckung Cover for groove	396.4728
33		5,3 M	WG HF-Dicht. O-Prot. 1,6 Si RF seal	396.1035
36	V1	1	Oszilloskop-Röhre (V1) Cathode ray tube	803.0873
37		1	DZ Schelle RD 37,3 B12,7 Clamp	015.8854
38		1	VS M3x25 DIN 7985 A4	081.9132
39		1	VS 3,2 DIN 125 A4	082.4670
40		1	VS 3 DIN 137 A2	005.0296
41		1	MH Abst. Rohr RD 4,5xRD8x10 Spacer	033.1706
42		1	MH Abst. Rohr RD 4,5xRD8x4 Spacer	033.1641
43		1	ZM Röhrenhalterung CRT support	803.1757
44		3	VS M3x5 DIN 7985 A4	084.1384
45		3	VS 3,2 DIN 125 A4	082.4670
46		3	VS 3 DIN 137 A2	005.0296

Lfd. Nr. / No.	Kenn-zeichen / Unit/ Comp.No	Stück-zahl / Qty	Benennung/Beschreibung / Designation	Sachnummer / Stock No.
47		1	VS 3,2 DIN 9021 A4	031.5185
48		1	VS 3 DIN 137 A2	005.0296
49		1	ZM Röhrenschirmkasten CRT screening case	803.1786
50		1	VS M3x6 DIN 7985 A4	081.9061
51		2	VS M2,5x4 DIN 7985 A4	088.0024
52		2	VS 2,7 DIN 125 A4	082.4663
53		2	VS 2,6 DIN 137 A2	005.0280
54		1	MZ Befestigungsring Retaining ring	803.1863
55		1	OS Scheibe (PMMA) DV Scope screen	803.1805
56		2	VS M2,5x5 Zyl. Schraube Screw	088.7693
57	W52	1	Kabel (W52) Cable	803.2053
58		1	ZM Montageplatte Mounting plate	803.1711
59	A25	1	ED Scope	803.1211
60	A26	1	ED X/Y-Zeichenerzeugung X/Y character generation	803.1257
61		1	Deckel für Scope Cover for scope	803.1740
62		4	VS M3x40 DIN 7985 A4	081.9155
63	A24	1	ED Scope Tastatur Scope keyboard	803.1170

Lfd. Nr. / No.	Kenn-zeichen / Unit/ Comp.No	Stück-zahl / Qty	Benennung/Beschreibung / Designation	Sachnummer / Stock No.
64		4	VS 3 DIN 137 A2	005.0296
65		2	VS M3x30 DIN 7985 A4	081.9149
66		2	VS 3 DIN 137 A2	005.0296
70		1	MZ Frontplatte Front panel	803.1792
71		4	VS M2,5x5 DIN 965 A4	088.4394
72		1	VS M2,5x16DIN 965 A4	088.0147
74	W55	1	DX Coax-Kabel (W55) Coaxial cable	803.2076
80		1	MH Dämpfungsring Damping ring	802.3504
81	B1	1	EL Lautsprecher 0,5 W RD 50 Loudspeaker	803.0509
82		1	MZ Dämpfungsgummi Damping rubber	802.3491
83		1	MZ Halteblech Supporting sheet	802.3485
84	C1	1	CE 470 µF ±20% 25 V 12,5x12,5	803.0715
85		2	MB Abstandsrohr Spacer	336.3731
86		1	DZ Kabelbi. RD 1-25 B2 Cable tie	015.9038
90		1	MZ Buchsenhalterung Female contact strip	802.2372
91		2	MZ Verdrehschutz Twisting protection	802.2489
92		1	MZ Verdrehschutz Twisting protection	802.2395

Lfd. Nr. / No.	Kenn-zeichen / Unit/ Comp.No	Stück-zahl / Qty	Benennung/Beschreibung / Designation	Sachnummer / Stock No.
93		1	MZ Verschluβstopfen Stopper	332.7426
94	W7	1	DX HF-Kabel (W7) RF cable	803.0050
95	W5	1	DX HF-Kabel (W5) RF cable	803.0050
96	W4	1	DX HF-Kabel (W4) RF cable	803.0044
97	W6	1	DX HF-Kabel (W6) RF cable	803.0044
98	W8	1	DX HF-Kabel (W8) RF cable	803.0080
100	A10	1	ED Anzeige/Tastatur Display/keyboard	802.3662
101		1	MZ Buchsenhalterung Female contact support	802.3510
102		4	VS Zyl. Schr. M2,5x5 A2 Screw	088.7693
103		16	VS M2,5x16 DIN 965 A4	088.0147
104		2	VS M2,5x6 DIN 965 A4	088.0101
105	W1	1	DX HF-Kabel (W1) RF cable	803.0015
106		1	MB Mutter f. Frontrahmen Nut for front frame	396.3150
107		1	VS M3x10 DIN 965 A4	081.9390
108		2	VS M3x10 DIN 7985	081.9084
110		1	MZ Stützblech Supporting sheet	802.3840
111		2	Abstandhülse Spacer	802.3527

Lfd. Nr.	Kenn-zeichen	Stück-zahl	Benennung/Beschreibung	Sachnummer
No.	Unit/ Comp.No	Qty	Designation	Stock No.
112		2	VS M2,5x16 DIN 965 A4	088.0147
113		2	MF Glaskörper Glass plate	802.3685
114		2	VS M2,5x6 DIN 965 A4	088.0101
120		1	Beschriftungsplatte Inscription panel	802.3456
121		1	OK Dreh. M.MULDE RD37 RD6 Knob	078.1192
122		2	OK Dreh. RD10,5 ACHS-RD4 Knob	078.2676
123		4	VS M3x6 DIN 7985 A4	081.9061
124		4	VS Scheibe RD3,1/7,2 H1,8 CR Washer	396.5518
125		2	VS Zyl. Schr. M2,5x5 A2 Screw	088.7693
130	A100	1	ED Motherboard	802.2714
131		1	MZ Schiene, rechts Rail, right	802.2495
132		1	MZ Schiene, links Rail, left	802.2345
133		6	VS 3 DIN 137 A2	005.0296
134		4	VS M3x6 DIN 7985 A4	081.9061
135		2	VS M3x8 DIN 7985 A4	081.9078
136		1	MZ Zwischenplatte Intermediate plate	802.2350
137		2	VS M3x10 DIN 965 A4	081.9084

Lfd. Nr. / No.	Kenn-zeichen / Unit/ Comp.No	Stück-zahl / Qty	Benennung/Beschreibung / Designation	Sachnummer / Stock No.
138		2	MZ Zahnstange Rack	802.2366
139		4	VS M2,5x3 DIN 923	088.0976
140		2	VS 3 DIN 137 A2	005.0296
141		2	VS M3x8 DIN 7985 A4	081.9078
145		1	MZ Zwischenwand Intermediate panel	802.2308
146		4	MZ Feder Spring	802.2414
147		8	VN 2,5x4 DIN 7340 Cu Sn	088.7306
148		3	VS 3 DIN 137 A2	005.0296
149		3	VS M3x8 DIN 7985 A4	081.9078
150		1	WG Kantenschutz Edge protection	002.1356
151		1	MZ Querwand Transverse panel	802.2450
152		1	MZ Streifen, links Strip, left	802.2566
154		2	VS M3x12 DIN 7985 A4	081.9090
155		1	MZ Streifen, rechts Strip, right	802.2572
160	A7	1	ED Digitalteil Digital unit	802.4517
161	CM-B5	1	Ablaufsteuerung/DRU Autorun control	803.3314
162	CM-B4	1	IEC-625 Bus-Interface IEC-625 bus interface	803.3914

Lfd. Nr.	Kenn-zeichen	Stück-zahl	Benennung/Beschreibung	Sachnummer
No.	Unit/ Comp.No	Qty	Designation	Stock No.
163	A6	1	ED Analogteil Analog unit	802.8435
164	A5	1	ED 1. Modulationsgenerator 1st modulation generator	802.5713
165	CMT-B7	1	2. NF-Synthesizer 2nd AF synthesizer	803.2618
166	CM-B8	1	HF-Millivoltmeter RF millivoltmeter	803.6813
167	CM-B11	1	DTMF-Auswerter DTMF decoder	803.4610
168	CMT-B6	1	NKL-Messer ACP meter	803.7810
169	A94	1	ED CR-Simulator CR simulator	804.0119
170	CM-B9	1	Duplex Modulat. Met. Duplex modulation meter	803.5317
171	A4	1	ED Ausgangsstufe Output stage	802.7616
172	A3	1	ED HF-Oszillator RF oscillator	802.8835
180	W43	1	DX HF-Kabel (W43) RF cable	803.0344
181	W9	1	DX HF-Kabel (W9) RF cable	803.0096
182	W10	1	DX HF-Kabel (W10) RF cable	803.0109
183	W11	1	DX HF-Kabel (W11) RF cable	803.0115
184	W12	1	DX HF-Kabel (W12) RF cable	803.0121
185	W2	1	DX HF-Kabel (W2) RF cable	803.0021
186	W3	1	DX HF-Kabel (W3) RF cable	803.0038

Lfd. Nr. / No.	Kenn-zeichen / Unit/ Comp.No	Stück-zahl / Qty	Benennung/Beschreibung / Designation	Sachnummer / Stock No.
187	W20	1	DX HF-Kabel (W20) RF cable	803.8045
188	W23	1	DX HF-Kabel (W23) RF cable	803.8068
189	W4	1	DX HF-Kabel (W4) RF cable	803.0044
190	W5	1	DX HF-Kabel (W5) RF cable	803.0050
191	W8	1	DX HF-Kabel (W8) RF cable	803.0080
192	W6	1	DX HF-Kabel (W6) RF cable	803.0044
193	W7	1	DX HF-Kabel (W7) RF cable	803.0050
194	W13	1	DX HF-Kabel (W13) RF cable	803.0138
195	W56	1	DX HF-Kabel (W56) RF cable	803.2082
196	W16	1	DX HF-Kabel (W16) RF cable	803.0167
197	W15	1	DX HF-Kabel (W15) RF cable	803.0150
198	W24	1	DX HF-Kabel (W24) RF cable	803.8074
199	W21	1	DX HF-Kabel (W21) RF cable	803.8051
200		1	ZM Rückrahmen 5E 1/1 Rear frame	396.2290
201		4	MG Rahmenschiene T350 Frame rail	396.2360
202		16	VS M3x8 DIN 965 A4	081.9384
203		1	WT Führungsschiene 5E (gn) Guide rail (green)	396.7527

Lfd. Nr.	Kenn-zeichen	Stück-zahl	Benennung/Beschreibung	Sachnummer
No.	Unit/ Comp.No	Qty	Designation	Stock No.
204		1	WT Führungsschiene 5E (bl) Guide rail (blue)	396.7540
205		1	WT Führungsschiene 5E (gr) Guide rail (gray)	396.7491
206		1	WT Führungsschiene 5E (sw) Guide rail (black)	396.7533
207		1	WT Führungsschiene 5E (rt) Guide rail (red)	396.7510
208		1	WT Führungsschiene 5E (ge) Guide rail (yellow)	396.7504
209		1	MZ Führungsplatte, oben (sw) Guide plate, top (black)	396.7179
210		1	MZ Führungsplatte, unten (bl) Guide plate, bottom (blue)	396.7185
211		1	MZ Stützplatte 5E Supporting plate	396.7756
212		2	MZ Massefeder, links 5E Earth clip, left	396.7662
213		1	MZ Seitenblech Lateral sheet	803.1886
214		2	VS M3x8 DIN 7985 A4	081.9078
215	A17	1	ZE Eichleitung für CMT Attenuation set CMT	802.4223
216		4	VN 5x4,5 DIN 7340	031.2857
217		4	DZ Durchführungstülle Feedthrough	118.6630
218		2	VS B3,2 DIN 9021 A4	031.5185
219		2	VS M3 DIN 934 A4	016.4398
220		4	VS M3x16 DIN 7985 A4	081.9103

Lfd. Nr.	Kenn-zeichen	Stück-zahl	Benennung/Beschreibung	Sachnummer
No.	Unit/ Comp.No	Qty	Designation	Stock No.
223		2	VS B3,2 DIN 9021 A4	031.5185
230	W2	1	DX HF-Kabel (W2) RF cable	803.0021
231	W13	1	DX HF-Kabel (W13) RF cable	803.0138
232	W14	1	DX HF-Kabel (W14) RF cable	803.0144
233	W1	1	DX HF-Kabel (W1) RF cable	803.0015
238		1	Guβwanne lack. Cast-iron panel, painted	802.2837
239		1	Trafoeinheit Transformer	802.5091
240		1	VS 4,3 DIN 6797 A2	016.2837
241		1	VS M4x55	081.9626
242	Z1	1	FN Netzst. m. Filter 3A Power plug with filter	803.0938
243		2	VS 3 DIN 137 A2	005.0296
244		2	VS M3x10 DIN 7985 A4	081.9084
245		1	MZ Massefeder Earth clip	802.2843
246	S1	1	FR Spannungswähler m. Si. Voltage selector with fuse	803.0896
247		2	VS 2,6 DIN 137 A2	005.0280
248		2	VS M2,5 DIN 934 A4	088.0230
249		2	VS M2,5x12 DIN 7985 A4	088.0060

Lfd. Nr. / No.	Kenn-zeichen / Unit/ Comp.No	Stück-zahl / Qty	Benennung/Beschreibung / Designation	Sachnummer / Stock No.
250	F1	1	SS Schmelzs. T2 DIN 41662 Fuse	020.7546
			SS Schmelzs. T4 DIN 41571 Fuse	020.7600
254	X100	1	VK Rändelkl. Isol. (rot) Knurled clamp, insul. (red)	219.5300
255	X101	1	VK Rändelkl. Isol. (blau) Knurled clamp, insul. (blue)	219.5339
256		1	FR Sicherungshalter GR Fuse holder	087.5022
257	F2	1	SS Schmelzs. T16 5x20 Fuse	332.3789
260	A80	1	ED Netzteil Power supply	802.3110
261		1	MZ Kühlwinkel Heat sink	802.2908
262		1	ME HF-Deckel RF screen	802.3040
263		10	VS M3x6 DIN 7985 A4	081.9061
265		1	Rückwand Lüfter Rear-panel blower	802.2466
266	W25	1	DX HF-Kabel (W25) RF cable	803.0250
267	W14	1	DX HF-Kabel (W14) RF cable	803.0144
268	W9	1	DX HF-Kabel (W9) RF cable	803.0096
269		4	MP Verschlußstopfen Stopper	528.8500

Lfd. Nr. / No.	Kenn-zeichen / Unit/ Comp.No	Stück-zahl / Qty	Benennung/Beschreibung / Designation	Sachnummer / Stock No.
270	E1	1	ZM Lüfter Blower	802.2595
271		4	VN 5x5 DIN 7340	031.2863
272		4	DZ Durchführungstülle 5x7x11 Feedthrough	099.3565
273		4	VS 4,3 DIN 125 A4	082.4686
274		4	VS M4x10 DIN 7985 A4	081.9184
275		2	VS 3,2 DIN 125 A4	082.4670
276		2	VS 3 DIN 137 A2	005.0296
277		2	VS M3x6 DIN 7985 A4	082.4670
280		1	MZ Blindplatte Dummy panel	802.2443
281		6	VS 2,7 DIN 125 A4	082.4663
282		6	VS 2,6 DIN 137 A2	005.0280
283		6	VS M2,5x6 DIN 7985 A4	088.0030
285		1	MZ Haltebügel Bracket	802.2420
286		4	VS M3x8 DIN 965 A4	081.9384

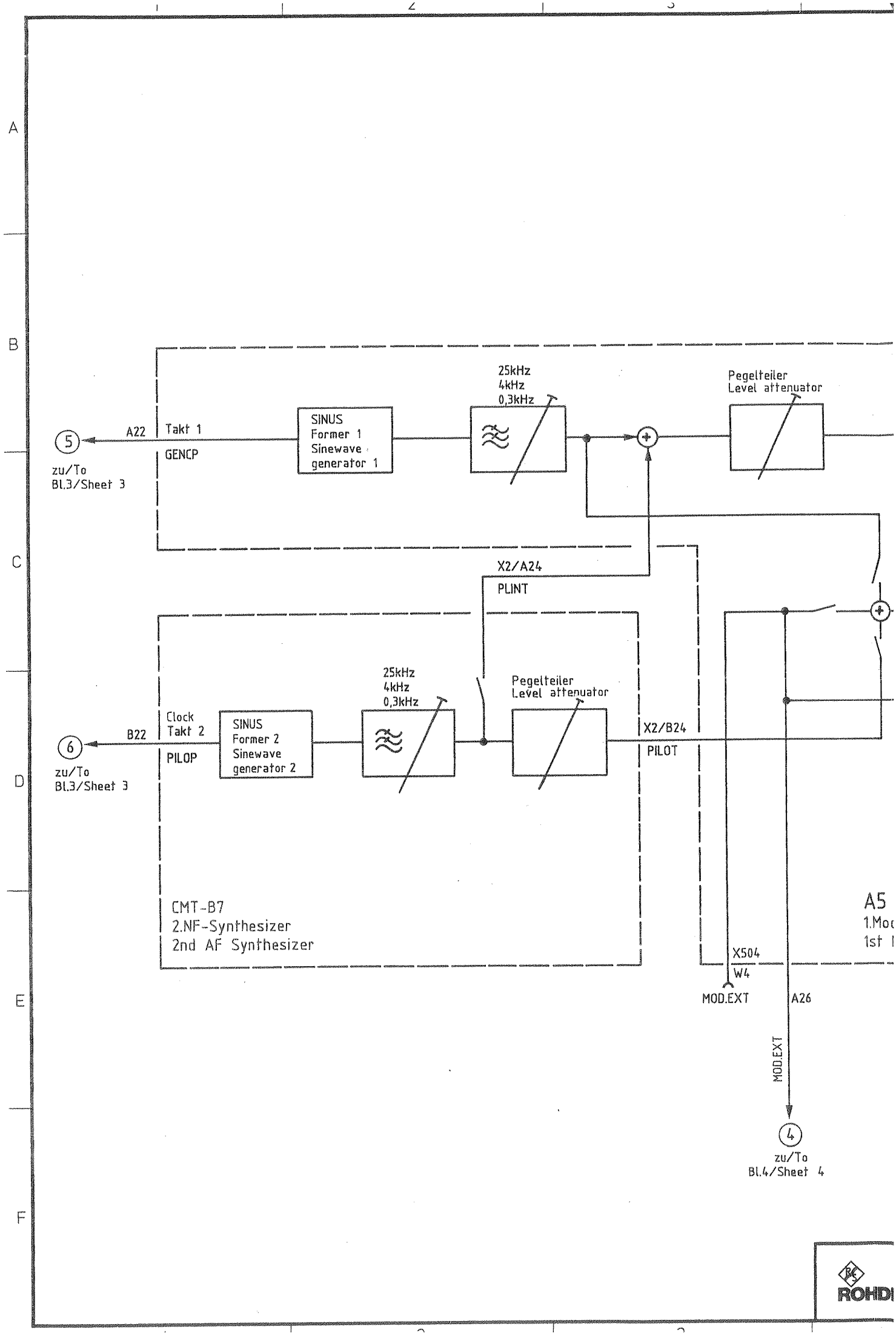

Zeichn.-Nr.

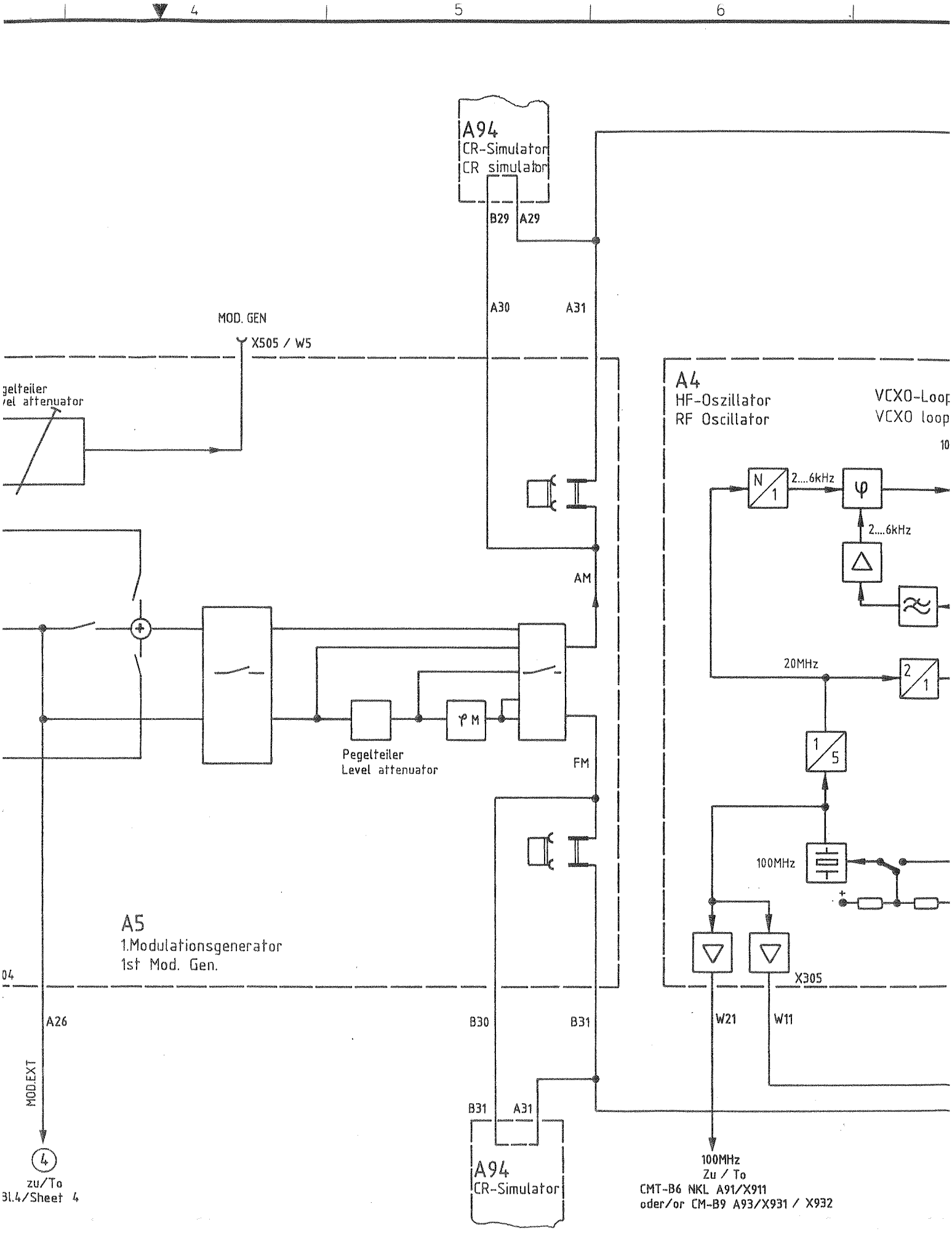

ROHDE&SCHWARZ	A	38951	11.87	IB					1KSA	Tag
									Bearb.	7.86
									Gepr.	
	And. Zust.	Änderungs-Mitteilung	Datum	Name	And. Zust.	Änderungs-Mitteilung	Datum	Name	Norm	

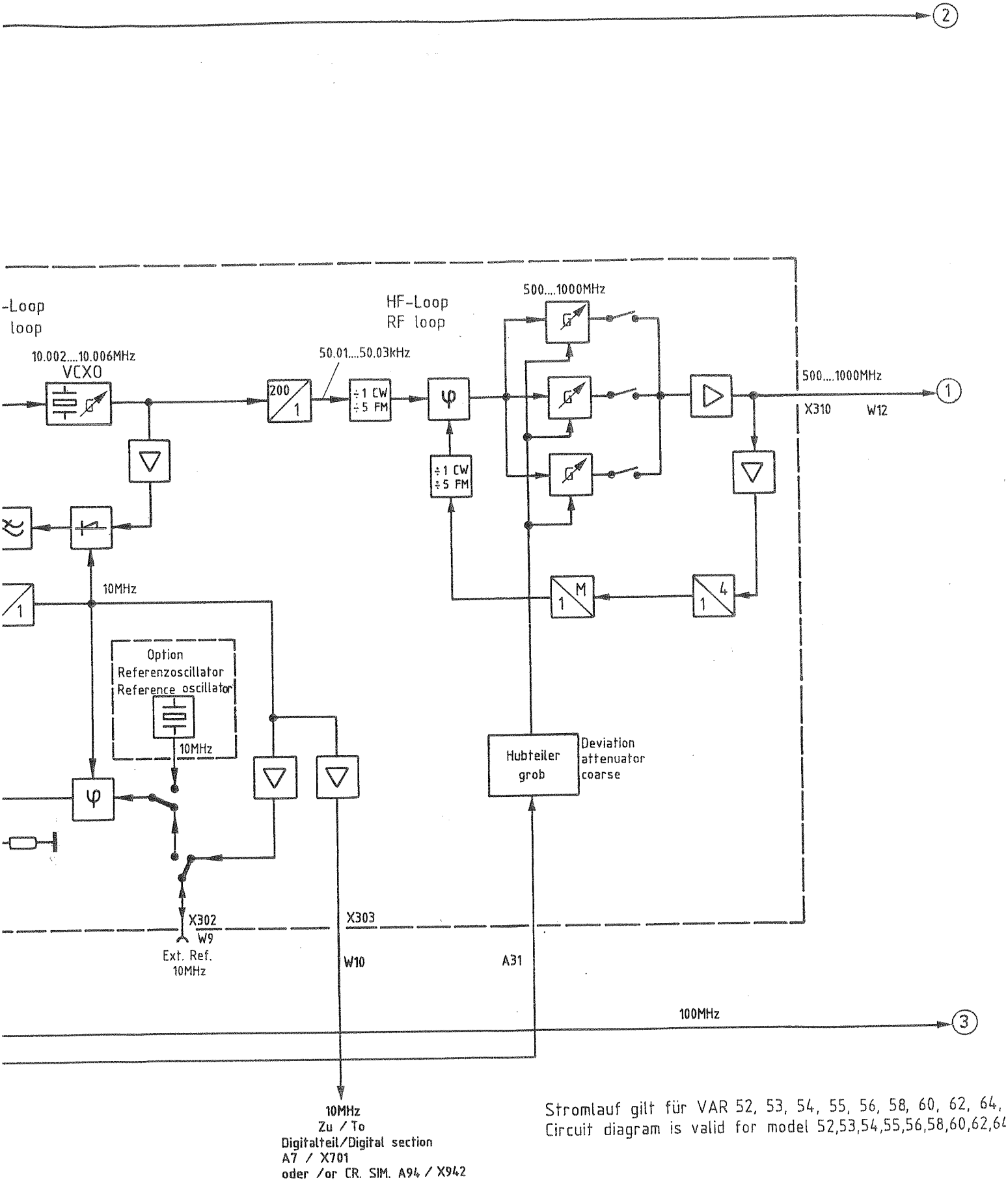

Stromlauf gilt für VAR 52, 53, 54, 55, 56, 58, 60, 62, 64,
Circuit diagram is valid for model 52,53,54,55,56,58,60,62,64

Name	Benennung		Zeichn.-Nr.	
CO	Radiocommunication Tester	Z	802.2020 FS	
	zu Gerät: CMT		reg. i. V. 802.2020 V	erste Z. 802.2020

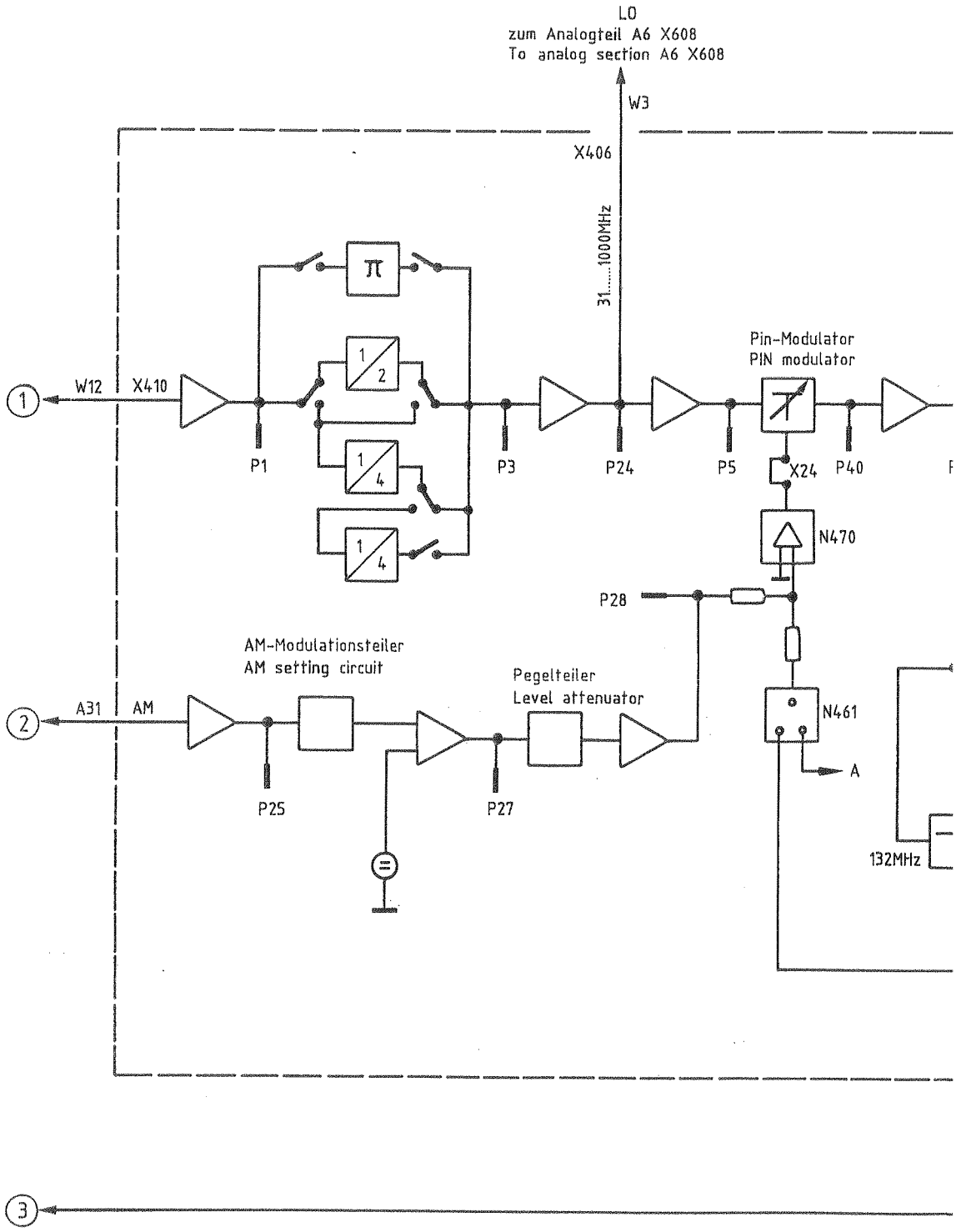

Zeichn.-Nr.

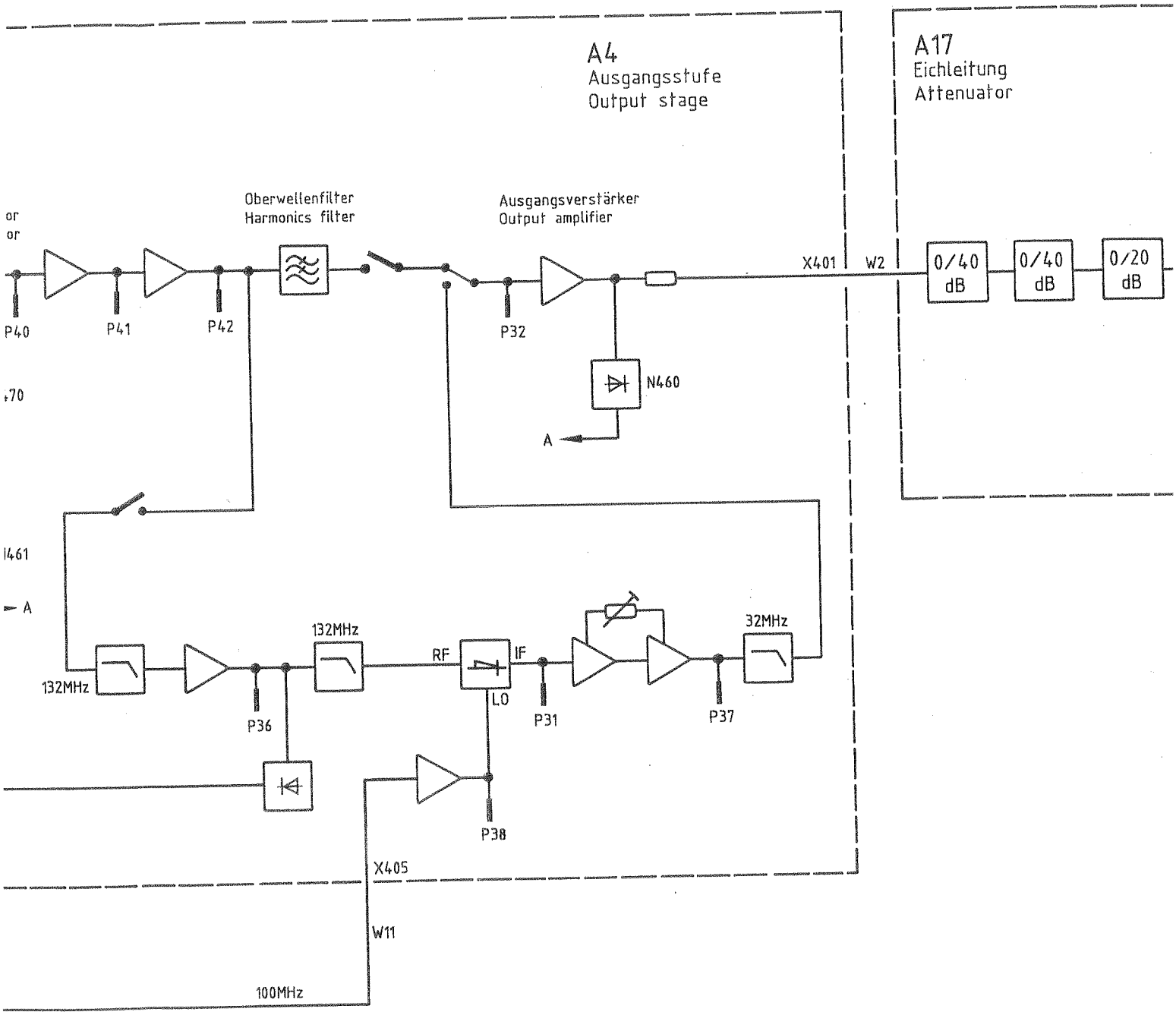

ROHDE & SCHWARZ	A	38951	11.87	IB					1KSA	Tag
									Bearb.	7.86
									Gepr.	
	And. Zust	Änderungs-Mitteilung	Datum	Name	And. Zust	Änderungs-Mitteilung	Datum	Name	Norm	

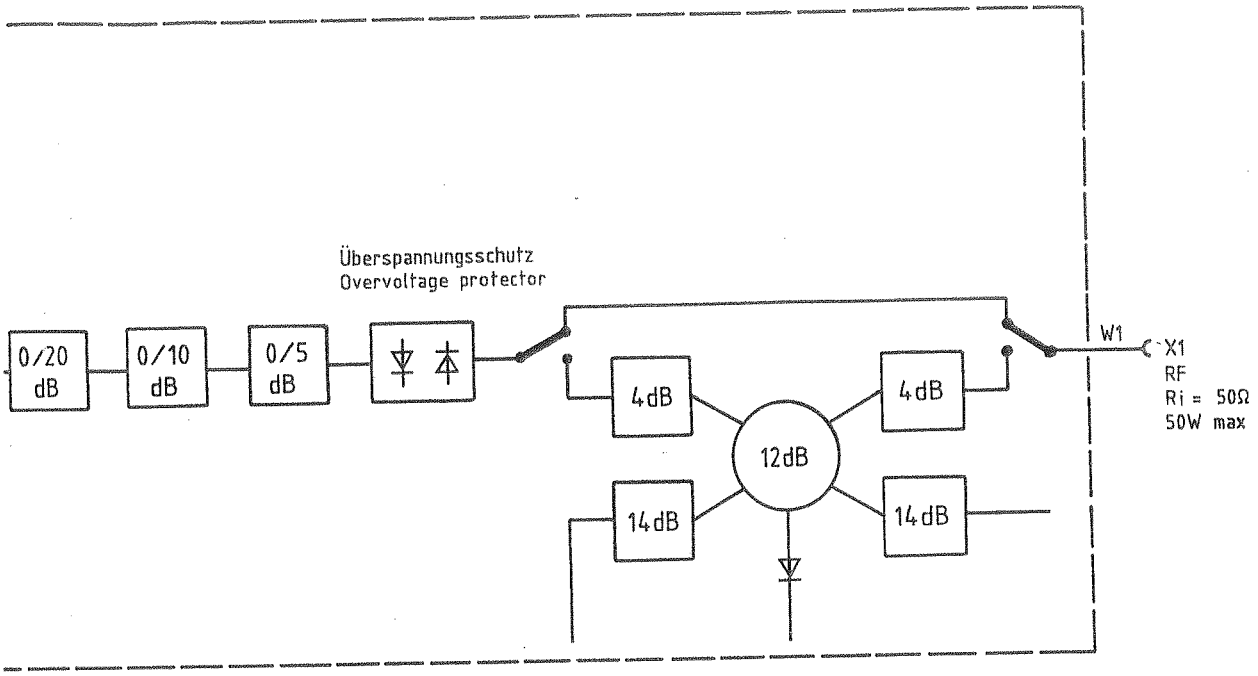

Stromlauf gilt für VAR 52, 54, 56, 58, 60, 62, 64, 66
Circuit diagramm is valid for model 52, 54, 56, 58, 60, 62, 64, 66

	Name	Benennung		Zeichn.-Nr.	
6	CO	Radiocommunication Tester	Z	802.2020 FS	
		zu Gerät: CMT		reg. i. V. 802.2020 V	erste Z. 802.2020

ROHDE&SCHWARZ

SERVICE INSTRUCTIONS

Power Pack

802.2814.02

Contents

5 Service Manual for Power Pack

(See circuit diagram 802.2814 S and block diagram)

5.1 Function Description

5.1.1 Total Concept

The power pack automatically enters the STANDBY mode when the AC supply or battery voltage is applied.

The transformed AC supply voltage is rectified by a bridge rectifier into a high-end voltage of 28 to 35 V DC which is independent of the input voltage. The high-end voltage with battery operation is the same as the battery voltage reduced by the voltage drop of approx. 0.5 V across the protection diode V100. In this mode the power pack delivers a voltage of 8 to 12 V at the 12-V output (dependent on the high-end voltage). This powers the switching regulator IC, the monitoring and power-up logic and the OCXO of the synthesizer. Pressing the STANDBY key resets the fed-back D flip-flop D70 and the switching regulator is started. The power pack then enters the POWER ON mode.

When loaded, the high-end voltage with AC supply operation drops to 20 to 30 V with a superimposed 100-Hz ripple (V_{pp}) of approx. 1 V; in battery mode it remains approximately the same.

A DC/DC converter operating according to the forward converter principle chops the high-end voltage, transforms the squarewave pulses and rectifies them again. Four output voltages are produced. Two storage elements are used for subsequent filtering: the toroidal core inductor L21 for the 5 V adjustable on the switching regulator N1 and a toroidal core with 3 windings L20 for the output voltages controlled to ±15 V and 24 V by low drop-out-voltage PNP series regulators.

The integrated fixed-voltage controllers N30, N40 and N60 stabilize the ±15 V and the 12 V; the 24 V are adjustable using IC N50 with series transistor V54. To ensure that the 12 V still remain controllable with battery voltages less than 15 V, the fixed-voltage controller N60 obtains its input voltage in POWER ON mode from the +15-V output. The switchover is handled by relay K30. Furthermore, this minimizes the losses at the 12-V output with high high-end voltages.

By resetting the D flip-flop D1, the window comparator N71 switches off the switching regulator and switches to the STANDBY mode in the event of faults such as overvoltages, undervoltages, overcurrents or short-circuits of the ±15 V or 24 V supplies. Comparator N70.1 also operates in a similar manner if it detects an overvoltage at the 5-V output. The current of the 5 V and high-end supplies is monitored by various comparators in the switching regulator IC N1. In the event of drastic faults such as a short-circuit of a power MOS FET, the power pack is isolated from the AC supply or the battery by a blown fuse.

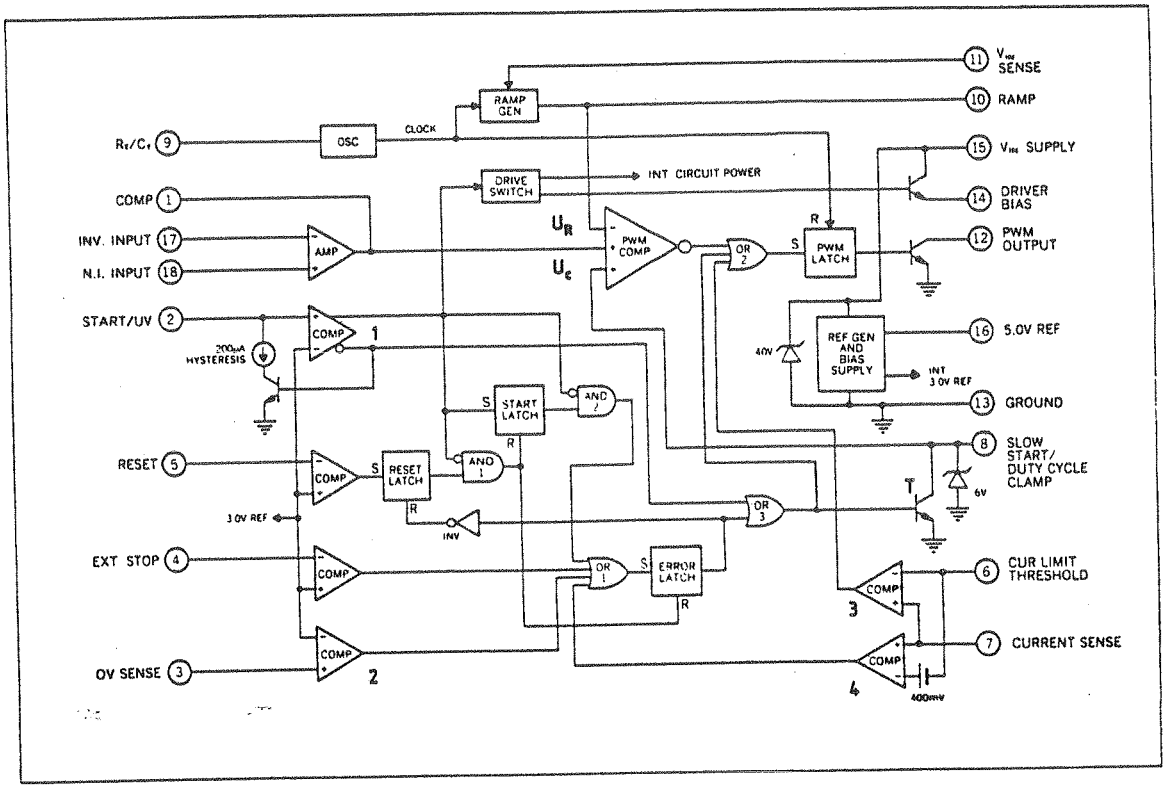

Fig. 5-1 Block diagram of the switching regulator IC

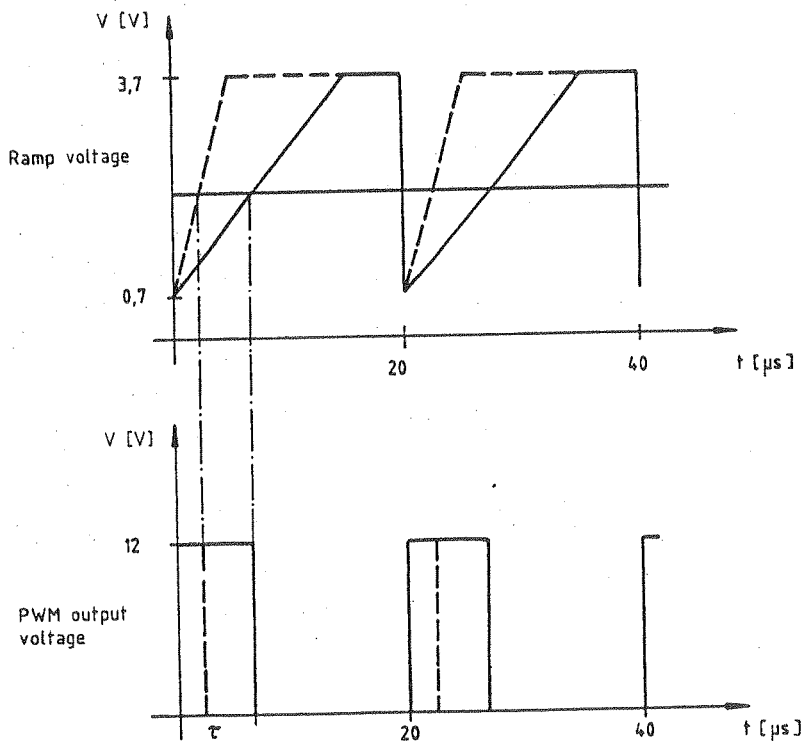

Fig. 5-2 Principle of control and generation of the duty factor

5.1.2 Stabilization of the Output Voltages

The output voltages are obtained by rectifying and LC filtering of transformed squarewave pulses with a fixed frequency f and a variable duty factor:

$$\frac{\tau}{T} : V_{out} = V_{in} \times v \times \frac{\tau}{T}$$

Where:

V_{out}	Output voltage
V_{in}	High-end voltage
v	Ratio of the secondary/primary windings of transformer T2
τ	Control phase period of the circuit-breaker
T = 1/f	The period

The squarewave pulses are obtained by switching the high-end voltage on and off. This is achieved via the primary winding of transformer T2 using 5 MOS FET power switches connected in parallel. A push-pull driver shortens the switching periods in order to reduce the switching losses. Decoupling of the gates using ferrite beads and a resistor prevents the production of high-frequency oscillations.

R6 and C7 determine the frequency of the RC oscillator (OSC) in the switching regulator IC N1 (Fig. 5-1) at 50 kHz.

The duty factor is generated by the pulse width modulation comparator (PWM-COMP in Fig. 5-1) by comparing a ramp voltage V_R with the smallest applied control voltage V_C (Fig. 5-2). The high-end voltage controls the slope of the ramp via R100 and thus sets approximately 5 V at the 5-V output. The remaining control deviation as a result of load-dependent voltage losses then shifts the control voltage V_C via the fault amplifier (AMP) until the deviation is a minimum and the output voltage is exactly 5.3 V. The control principle relieves the regulator since the influence of the high-end voltage on the output voltage is a minimum and V_C remains approximately 2.2 V.

Compensation of the 180° phase rotation of the LC filter L21-C22-C23 with a resonance frequency of 420 Hz by means of different pole and zero positions (C26, R114, R113, R9, C18) in the transmission function of the regulator guarantee high control amplification as well as stability of the control loop. The result is a highly constant 5-V output, high suppression of the 100-Hz ripple with AC supply operation and thus fast compensation of load variations. The voltage at the other outputs (cross-control) varies by approx. 1-V, however, depending on the load. Additional regulation of the other outputs using series-connected stabilizers is therefore necessary.

5.1.3 Protective Measures

5.1.3.1 Protection Against Incorrect Polarity

The Schottky diode V100 protects the power pack at the battery input from incorrect polarity.

5.1.3.2 Monitoring the High-end Voltage

The comparators COMP 1 and COMP 2 (Fig. 5-1) on the primary side ensure that the power pack only starts up with high-end voltages greater than 10 V and switches off with voltages greater than 35 V or smaller than 9 V. The comparators receive the corresponding reference voltages from the voltage dividers R_1 to R_4, set the error latch (Fig. 5-1) which then sets the voltage V_C to zero and therefore suppresses further generation of control pulses.

5.1.3.3 Limitation of the Duty Factor

Duty factors greater than 0.45 may lead to saturation of the transformer as a result of incomplete demagnetization. It is particularly dangerous if the high-end voltage is between 9 V and 10 V and the regulation stops. The voltage divider R101, R102 then reduces the control voltage V_C at PWM-COMP and thus prevents the duty factor from rising because of the small ramp gradient.

5.1.3.4 Soft Start

R101 and C14 determine the rate at which the output voltages are turned on. If transistor T (see Fig. 5-1) is blocked, C14 is charged via R101 and V_C increases continuously, thus leading to a successive increase in the duty factor and thus in the output voltage.

The turn-on time is dependent on the high-end voltage and is 30 to 200 ms:

$$t \approx 0.41\ s \times \log_e \frac{V_{in}}{V_{in} - 3\ V}$$

5.1.3.5 Protection of the 5-V Output

Two comparators (COMP 3 and 4 in Fig. 5-1) integrated in N1 monitor the voltage drop caused by the output current through R22 and weighted by the voltage dividers R104 to R107.

If

$$V_{76} = (V_{out} + I \times 0.047\ \Omega) \cdot \frac{R_{105}}{R_{104} + R_{105}} - \frac{V_{out}}{2}$$

becomes greater than 0 V, COMP 3 reduces the control voltage V_C until V_{76} remains ≈ 0 V. This results in a reverse current limiting characteristic (foldback): $I \approx 0.8\ 1/\Omega \times V_{out}$. If V_{76} becomes >0.4 V nevertheless, comparator COMP 4 sets the error latch and switches off the pulse generation. This corresponds to a short-circuit current of 18 A.

With a voltage greater than 5.6 V ±2% at this output, the comparator N70.1 sets the power pack to the STANDBY mode by resetting the D flip-flop D70. This protection is also triggered with no load at the 5-V output.

5.1.3.6 Protection of the ± 15-V and 24-V Outputs

These three voltages are added via R76 to R78 to approx. 5 V. The power pack is switched to the STANDBY mode by N71 via D70 if this voltage is outside the window of 4.7 to 5.4 V because of an overvoltage or undervoltage at one of the outputs.

N30 and N40 have an integrated foldback current limitation which is triggered between 2.5 and 5 A. This current limitation reduces the +15-V or -15-V output voltage which then leads to detection of the fault via the window comparator.

The current limitation of the 24-V series stabilization functions in a similar manner. The base current of V54 is measured in this case via R54. The output voltage drops with V_{BE} >0.7 V at V55 which shuts down the power pack. The inaccuracy of the limiting currenc I_F is a result of the spread of the current amplification of V54:

$$I_F \approx (70 \text{ to } 130) \times \frac{0.7\ V}{R54} \approx 0.9 \text{ to } 1.6\ A$$

The undefined current limitation endangers the power pack as a result of a continuous overcurrent since the power of the switching transistors is not monitored on the primary side.

To ensure safe start-up of the power pack, the window comparator is switched on with a delay via V84.

V55 limits the voltage prior to the 24-V series stabilization to approx. 36 V. The coupled inductor guarantees that the voltage before N30 and N40 is less than 30 V. These three outputs can therefore be driven without a load.

5.1.3.7 Protection of the 12-V Output

The N60 protects itself from overheating by means of an integrated thermal shutdown. R60 and V61 limit the input voltage to 33 V with high-end voltages greater than 33 V.

5.2 Testing and Adjustment

5.2.1 Interfaces

The power pack generates five stabilized output voltages with the following current drain values from AC supplies of 100, 120, 220 or 240 V, in each case ±10% and 47 to 400 Hz, or from a battery voltage of 11 to 30 V:

+ 5 V (4.6 A) divided into 5 V analog and 5 V digital,

+15 V (2.3 A),

-15 V (2.0 A),

+24 V (0.8 A),

+12 V (0.2 A).

With this regulated power of approx. 115 W, the active power drawn from the AC supply is approx. 190 W and that from the battery approx. 175 W, corresponding to an efficiency of approx. 60% and approx. 65%, respectively.

The unit also generates a power failure signal which indicates with a "Low" level if the 5-V supply falls below 5.1 V ±2% and a "High" level for the STANDBY LED. The associated key changes the operating mode of the power pack with a rising edge.

5.2.2 Testing the Switch-on and Monitoring Logic

→ Remove jumper from P80 and apply a voltage of +5 V to P80.2: the switching regulator is switched off.

→ Apply a variable +5 V to P73.

→ Apply 20 V with a 2.0-A current limitation at the battery input.

→ Measure a voltage > 4.7 V at P80.3 and 11.5 to 12.5 V at the 12-V output.

Testing D70

→ A rising edge at X71 (STANDBY) resets D70: the voltage measured at P80.3 should be < 0.7 V.

Testing the ±15-V and 24-V monitoring

→ Increasing the voltage above 5.4 V at P73 sets the D flip-flop.

→ Set 5 V at P73 and reset the flip-flop again with a rising edge at X71.

→ Reducing the voltage below 4.7 V at P73 sets the D flip-flop.

→ Set 5 V at P73 and reset the flip-flop again with a rising edge at X71.

Testing the 5-V overvoltage detection

→ Apply a voltage greater than 5.6 V ±2% at P71.1: the flip-flop is set again.

Testing the power failure

→ The voltage at X70 is less than 0.7 V with a voltage of less than 5.1 V ±2% at P71.2; the voltage at X70 is greater than 4.7 V if the voltage at P71.2 is greater than 5.1 V ±2%.

5.2.3 Starting-up the Switching Regulator

→ Disconnect the voltage at the battery input.

→ Connect P80.1 and P80.2.

→ Connect a minimum load to the output voltages:

+ 5 V : 5.1 Ω/5 W
±15 V : 68 Ω/5 W
+24 V : 470 Ω/3 W

→ Apply 20 V with 2-A current limitation: the power pack starts up.

Setting and testing the output voltages

→ Set 5.3 V at the 5-V output using R12.

→ Set 24.0 V at the 24-V output using R56.

→ Measure the voltage at the ±15-V outputs: 14.8 to 15.2 V.

→ Measure the voltage at P73: approx. 5 V.

Testing the voltage characteristics on the switching regulator

→ Test the frequency at P1: 47 kHz ≤ f ≤ 53 kHz

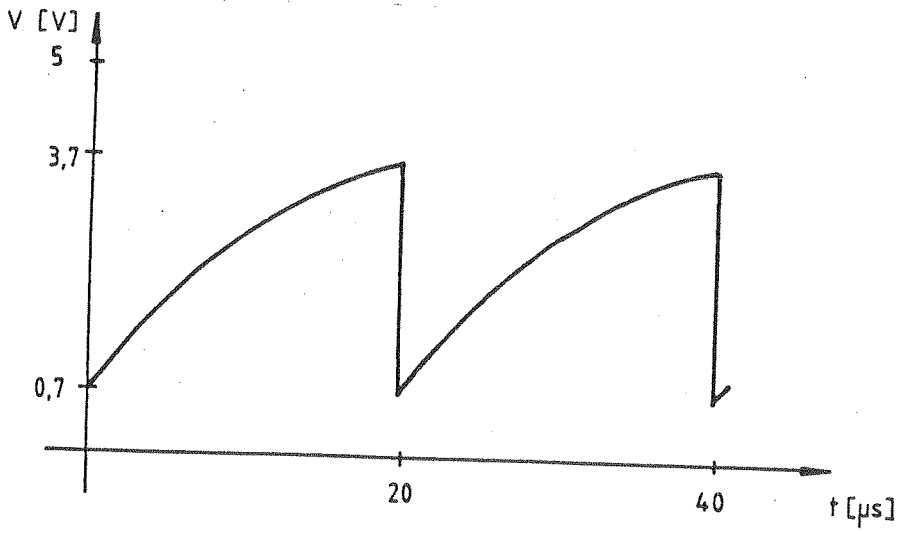

Fig. 5-3 Frequency at P1

→ Testing the ramp gradient at P2

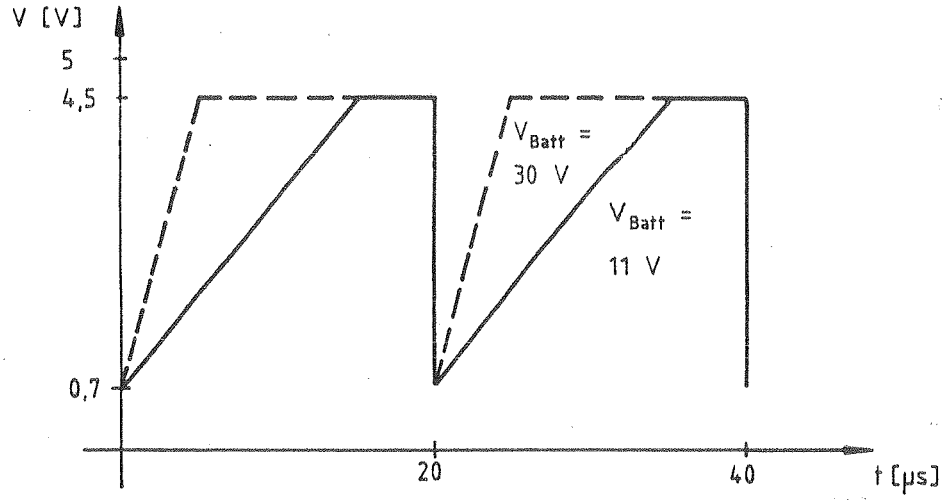

Fig. 5-4 Ramp gradient at P2

For $V_{battery}$ 11 V : $\frac{dV}{dt}$ approx. 0.25 $\frac{V}{\mu s}$

30 V : $\frac{dV}{dt}$ approx. 0.75 $\frac{V}{\mu s}$

→ Testing the controller voltage at P3: 2.0 to 2.5 V DC

Testing the overvoltage and undervoltage switch-off

- V_{batt} <9.5 V : the power pack switches off.
- V_{batt} 35 to 36 V: the power pack switches off.

5.2.4 Testing the Power Pack under Load

→ Disconnect the voltage at the battery input.

→ Connect P80.2 and P80.3.

→ Connect the standard load to the output voltages:

5 V : 2.2 Ω/12 W approx. 2.5 A

±15 V : 8.1 Ω/30 W aprrox. 1.8 A

24 V : 47 Ω/13 W approx. 0.5 A

→ Apply 11 V with 20-A current limitation.

→ Rising edge at X71 switches on the power pack.

Testing the high-end voltages before the series regulators

→ Pin 3 of N30 and N40 : V >16.2 V

→ Emitter of V54 : V >25.2 V

→ No-load on the ±15 V and the 24 V; 4.5 A on the 5 V

→ Pin 3 of N30 and N40 : V <30 V

→ Emitter of V54 : V <40 V

Testing the current limitation

→ Set V_{batt} ≈ 20 V with 20-A current limitation

	Full load	Overload
5 V	4.6 A	Max. 5.5 A
+15 V	2.5 A	Max. 5 A
-15 V	2.0 A	Max. 5 A
24 V	0.8 A	Max. 1.6 A

→ By decreasing the load resistance of each supply line, increase the current of the 4 output voltages until overloading occurs and test that the power pack switches off in each case.

5.2.5 Start-up with AC Supply Operation

→ Disconnect the voltage at the battery input.

→ Set the voltage selector to 240 V.

→ Connect full load to the output voltages.

→ Connect 240 V power supply.

→ Check the DC voltage at P : with 264 V AC <34.5 V.

→ Switch on with rising edge at X71.

→ Test the DC voltage at the + and - terminals of C4

With 264 V AC : 27 to 30 V

With 240 V AC : 24 to 27 V

With 218 V AC : 20 to 24 V

5.2.6 Testing the Specification with the Power Pack Closed

Voltage variations with input voltage of 11 to 30 V

+5.3 V ±0.08 V (2 to 4.6 A)

+15 V ±0.3 V (0 to 2.3 A)

-15 V ±0.3 V (0 to 2.0 A)

+24 V ±0.1 V (0 to 0.8 A)

+12 V ±0.5 V (0 to 0.2 A)

Measure the noise voltages on the output voltages using voltmeter URE with 100-kHz lowpass: <2 mV_{rms}.

5.3 Troubleshooting

Fault: The power pack does not start or switches off again immediately.

Cause: Incorrect polarity of voltage at battery terminals, voltage less than 9.5 V or greater than 35.5 V.

Fuse blown.

Short-circuit of output voltages.

The soft start timing (R101, C14) - switch-on of window comparator (R84, C72) - is incorrect.

Fault: ±15 V or 24 V not present.

Cause: Series regulator faulty.
Each series regulator can be tested separately by applying the high-end voltage of 17 V to C33 or C43 or 26 V to C52.

Fault: 5.3 V cannot be adjusted using R12.

Cause: 5-V current limitation active.
The limitation can be switched off by removing the jumpers P4 and P6 (only for test purposes).

Fault: The switch-on and monitoring logic is not operating.

Cause: D70, N70, N80 faulty.

Test as with start-up after removing jumper at P80 and applying +5 V to P80.2.

Fault: STANDBY voltage at C3, C4 too high.

Cause: T1 does not correspond to the specifications (secondary voltage too high).

Fault: High-end voltage at C52 too small.

Cause: L20 does not correspond to the specifications (number of ±15 V windings too high).

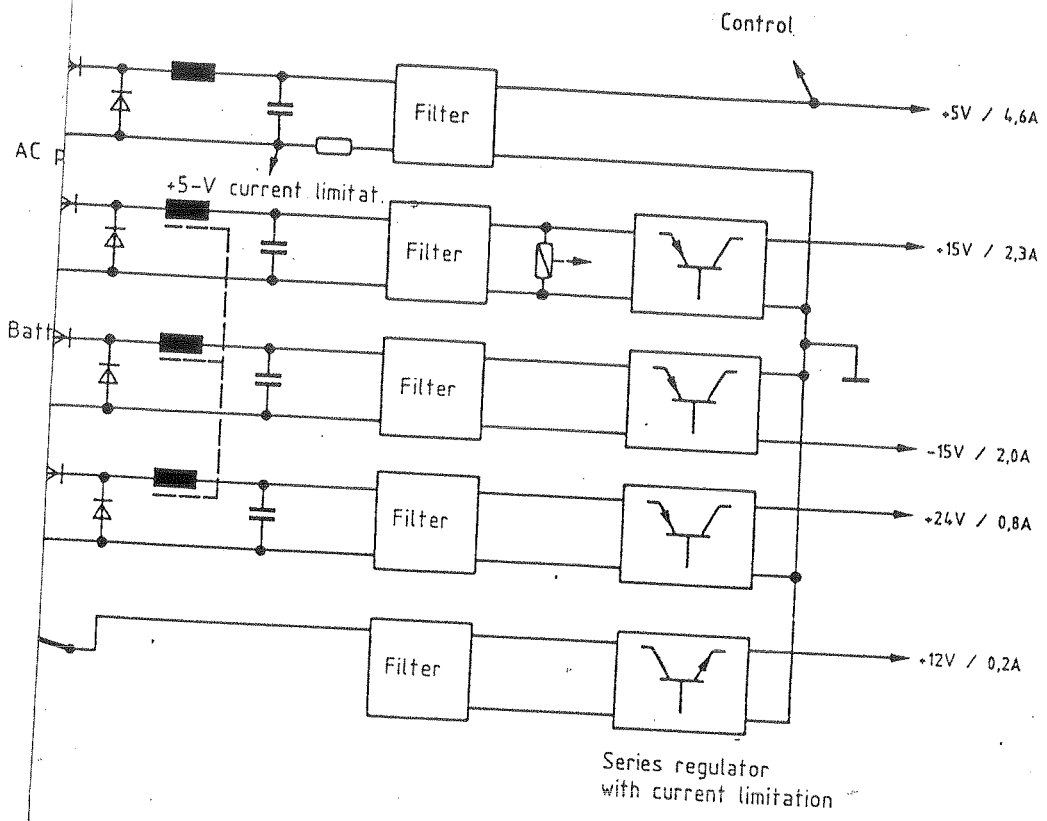

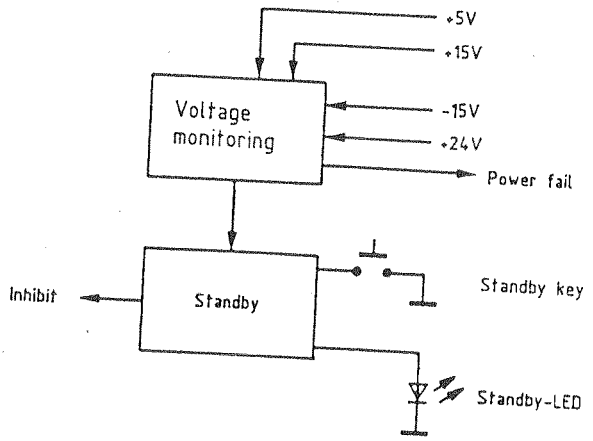

gram of power pack

ROHDE & SCHWARZ
MÜNCHEN

Schaltteillisten
Stromläufe
Bestückungspläne

Parts lists
Circuit diagrams
Components plans

R 29500 Bl. 2

ROHDE&SCHWARZ	ÄZ	Datum Date	Schaltteiliste für Parts list for	Sachnummer Stock Nr.	Blatt Page
	30	0587	ZE NETZTEIL POWER SUPPLY	802.2814.01 SA	1

Kennzeichen Component No.	Benennung/Beschreibung Designation	Sachnummer Stock No.	enthalten in contained in
A80	ED NETZTEIL NUR VAR : 02 32 POWER SUPPLY	802.3110.02	
A81	FILTERPLATTE FILTER BOARD	802.3004	802.3110.01
C1	CC 10NF-20+50%7X8R4000 CAPACITOR VALVO 2222 63051 64051103	CC 087.7525	802.3110.01
C2	CC 10NF-20+50%7X8R4000 CAPACITOR VALVO 2222 63051 64051103	CC 087.7525	802.3110.01
C3	CE 10MF-10+30%35V RD41X40 ELECTROLYTIC CAPACITOR NATIONAL ECE-T35R103L	803.0596	802.3110.01
C4	CE 10MF-10+30%35V RD41X40 ELECTROLYTIC CAPACITOR NATIONAL ECE-T35R103L	803.0596	802.3110.01
C5	CC 10NF+-10%100V5K1200VIE CERAMIC CAPACITOR UNION CARB CK05BX103K	CC 068.4060	802.3110.01
C6	CC 100NF+-10%50V5K1200VIE CAPACITOR UNION CARB CK05BX104K	CC 084.5350	802.3110.01
C7	CC 2,2NF+- 5%100V NPO VIE CAPACITOR ERIE 8133-100-COG-2,2NF-J	CC 060.0936	802.3110.01
C8	CC 10NF-20+50%7X8R4000 CAPACITOR VALVO 2222 63051 64051103	CC 087.7525	802.3110.01
C9	CE 100UF+-20%25V RD8X9,5 ELECTROLYTIC CAPACITOR MATSUSHITA ECE-A1ESS-101	803.0580	802.3110.01
C11	CC 390PF+- 5%100V NPO VIE CERAMIC CAPACITOR UNIONCARB C052C391J2G1CA	CC 060.0842	802.3110.01
C12	CC 1,5NF+-10%4X5R2000 CAPACITOR VALVO 2222 63051 152	CC 087.7048	802.3110.01
C13	CC 10NF-20+50%7X8R4000 CAPACITOR VALVO 2222 63051 64051103	CC 087.7525	802.3110.01
C14	CE 4,7UF+-20%25V SAL ELECTR.CAPACITOR VALVO 2222 122 36478	CE 007.3928	802.3110.01
C15	CE 100UF+-20%25V RD8X9,5 ELECTROLYTIC CAPACITOR MATSUSHITA ECE-A1ESS-101	803.0580	802.3110.01
C16	CE 100UF+-20%25V RD8X9,5 ELECTROLYTIC CAPACITOR MATSUSHITA ECE-A1ESS-101	803.0580	802.3110.01
C17	CE 100UF+-20%25V RD8X9,5 ELECTROLYTIC CAPACITOR MATSUSHITA ECE-A1ESS-101	803.0580	802.3110.01

ROHDE&SCHWARZ	ÄZ	Datum Date	Schaltteiliste für Parts list for	Sachnummer Stock Nr.	Blatt Page
	30	0587	ZE NETZTEIL POWER SUPPLY	802.2814.01 SA	2

Kennzeichen Component No.	Benennung/Beschreibung Designation	Sachnummer Stock No.	enthalten in contained in
C18	CC 4,7NF+- 5%100V NPO VIE CERAMIC CAPACITOR ERIE 8737-100-COG-4,7NF-J	CC 060.0971	802.3110.01
C19	CC 470PF+-10%3X4R2000 CAPACITOR VALVO 2222 63051 471	CC 087.6993	802.3110.01
C20	CC 10NF+-10%100V5K1200VIE CERAMIC CAPACITOR UNION CARB CK05BX103K	CC 068.4060	802.3110.01
C21	CE 470UF-10+50%16V12,5X20 ALUMINIUM CAPACITOR ROEDERST EKR 00 FE 347 D	565.8400	802.3110.01
C22	CE 1000UF-10+50%25V 17X25 ALUMINIUM CAPACITOR ROEDERST. EKR00JG410E	565.9513	802.3110.01
C23	CE 470UF-10+50% 40V 15X30 ELECTROLYTIC CAPACITOR ROEDERST ELKO EK470/40	CE 087.0572	802.3110.01
C24	TRIMMWERT / SELECTED		802.3110.01
C25	CC 4,7NF+-10%6X9R2000 CAPACITOR VALVO 2222 63051 472	CC 087.7102	802.3110.01
C26	CC 82NF+-10%50V5K1200VIEL CERAMIC CAPACITOR UNION CARB CK05BX823K	CC 084.5344	802.3110.01
C27	CE 470UF-10+50%40V15RDX25 ELECTROLYT CAPACITOR ROEDERSTEI EKR00HG347G	629.9776	802.3110.01
C28	TRIMMWERT / SELECTED		802.3110.01
C29	TRIMMWERT / SELECTED		802.3110.01
C31	CE 470UF-10+50% 40V 15X30 ELECTROLYTIC CAPACITOR ROEDERST ELKO EK470/40	CE 087.0572	802.3110.01
C32	CE 470UF-10+50% 40V 15X30 ELECTROLYTIC CAPACITOR ROEDERST ELKO EK470/40	CE 087.0572	802.3110.01
C33	CE 470UF-10+50% 40V 15X30 ELECTROLYTIC CAPACITOR ROEDERST ELKO EK470/40	CE 087.0572	802.3110.01
C34	CC 1UF+-10%50V7K1200VIEL CAPACITOR UNION CARB CK06BX105K	CC 084.5538	802.3110.01
C35	CC 100NF+-10%50V5K1200VIE CAPACITOR UNION CARB CK05BX104K	CC 084.5350	802.3110.01
C36	CE 470UF+-20%25V12,5X12,5 ELECTROLYTIC CAPACITOR MATSUSHITA ECE-A1ESS-471U	803.0715	802.3110.01
C41	CE 470UF-10+50% 40V 15X30 ELECTROLYTIC CAPACITOR ROEDERST ELKO EK470/40	CE 087.0572	802.3110.01
C42	CE 470UF-10+50% 40V 15X30 ELECTROLYTIC CAPACITOR ROEDERST ELKO EK470/40	CE 087.0572	802.3110.01
C43	CE 470UF-10+50% 40V 15X30 ELECTROLYTIC CAPACITOR ROEDERST ELKO EK470/40	CE 087.0572	802.3110.01

ROHDE&SCHWARZ	ÄZ	Datum Date	Schaltteilliste für Parts list for	Sachnummer Stock Nr.	Blatt Page
	30	0587	ZE NETZTEIL POWER SUPPLY	802.2814.01 SA	3

Kennzeichen Component No.	Benennung/Beschreibung Designation	Sachnummer Stock No.	enthalten in contained in
C44	CC 1UF+-10%50V7K1200VIEL CAPACITOR UNION CARB CK06BX105K	CC 084.5538	802.3110.01
C45	CC 100NF+-10%50V5K1200VIE CAPACITOR UNION CARB CK05BX104K	CC 084.5350	802.3110.01
C46	CE 470UF+-20%25V12,5X12,5 ELECTROLYTIC CAPACITOR MATSUSHITA ECE-A1ESS-471U	803.0715	802.3110.01
C50	CC 2,2NF+50-20%9HDK4000 CERAMIC CAPACITOR VALVO 2222 655 53222	006.0502	802.3110.01
C51	CE 470UF-10+50% 40V 15X30 ELECTROLYTIC CAPACITOR ROEDERST ELKO EK470/40	CE 087.0572	802.3110.01
C52	CE 470UF-10+50% 40V 15X30 ELECTROLYTIC CAPACITOR ROEDERST ELKO EK470/40	CE 087.0572	802.3110.01
C54	CC 10NF-20+50%7X8R4000 CAPACITOR VALVO 2222 63051 64051103	CC 087.7525	802.3110.01
C55	CE 47UF-10+50% 40V 9X13 ELECTROLYTIC CAPACITOR ROEDERST EK 00 CB 247 G	CE 006.7142	802.3110.01
C60	CE 100UF-10+50% 40V 13X17 ELECTROLYTIC CAPACITOR SIEMENS B41316-B7107-Z	CE 022.7595	802.3110.01
C61	CK 330NF+-5%63V5RM MKT CAPACITOR WIMA MKS2/63/0,33UF/5%	CK 099.2969	802.3110.01
C62	CK 100NF+-5%63V5RM MKT CAPACITOR WIMA MKS/2/63/0,1UF/5%	CK 099.2930	802.3110.01
C70	CC 10NF-20+50%7X8R4000 CAPACITOR VALVO 2222 63051 64051103	CC 087.7525	802.3110.01
C71	CE 22UF+-20%16V5RDX5RAD.A ELECTROLYTIC CAPACITOR NCC SRE 22UF/16V+-20%	358.6062	802.3110.01
C72	CE 100UF-10+50% 16V 9X13 ELECTROLYTIC CAPACITOR ROEDERST EK 00CB 310 D	CE 006.7165	802.3110.01
C73	CE 100UF+-20%25V RD8X9,5 ELECTROLYTIC CAPACITOR MATSUSHITA ECE-A1ESS-101	803.0580	802.3110.01
C74	CE 22UF+-20%16V5RDX5RAD.A ELECTROLYTIC CAPACITOR NCC SRE 22UF/16V+-20%	358.6062	802.3110.01
C75	CE 10UF+-20%35V RD5X5 ELECTROLYTIC CAPACITOR NATION PAN ECE-A1VKS-100	803.0667	802.3110.01
C76	CE 10UF+-20%35V RD5X5 ELECTROLYTIC CAPACITOR NATION PAN ECE-A1VKS-100	803.0667	802.3110.01
C77	CC 100PF+-2%4X5N750 CAPACITOR VALVO 2222 678 58101	CC 087.6906	802.3110.01

ROHDE&SCHWARZ	ÄZ	Datum Date	Schaltteilliste für Parts list for	Sachnummer Stock Nr.	Blatt Page
	30	0587	ZE NETZTEIL POWER SUPPLY	802.2814.01 SA	4

Kennzeichen Component No.	Benennung/Beschreibung Designation	Sachnummer Stock No.	enthalten in contained in
C100	CC 150NF+-10%100V K1200VI CAPACITOR UNION CARB CK06BX154K	CC 060.1161	
C101	CC 10NF+-10%100V5K1200VIE CERAMIC CAPACITOR UNION CARB CK05BX103K	CC 068.4060	
C102	CE 220UF-10+50%40V12,5X20 ALUMINIUM CAPACITOR ROEDERST EKR00FE322G	565.9494	
C103	CC 10NF+-10%100V5K1200VIE CERAMIC CAPACITOR UNION CARB CK05BX103K	CC 068.4060	
C104	CE 220UF-10+50%40V12,5X20 ALUMINIUM CAPACITOR ROEDERST EKR00FE322G	565.9494	
F C104	CC 10NF-20+50%7X8R4000 CAPACITOR VALVO 2222 63051 64051103	CC 087.7525	802.3110.01
C105	CC 10NF-20+50%7X8R4000 CAPACITOR VALVO 2222 63051 64051103	CC 087.7525	802.3110.01
C106	CE 47UF-10+50% 40V 13X17 ELECTROLYTIC CAPACITOR ROEDERST ELKOEKU47/40	CE 247.4991	
C107	CE 47UF-10+50% 40V 13X17 ELECTROLYTIC CAPACITOR ROEDERST ELKOEKU47/40	CE 247.4991	
C108	CC 10NF-20+50%7X8R4000 CAPACITOR VALVO 2222 63051 64051103	CC 087.7525	802.3110.01
D70	BL CD4013BE 2XD- FLIPFL FLIPFLOP RCA CD4013BE	BL 086.7021	802.3110.01
F1	SS SCHMELZS.T2 D DIN41571 NUR VAR : 02 FUSE WICKMANN T2D DIN 41571 TROP	SS 020.7546	
F1	SS SCHMELZS.T4 D DIN41571 NUR VAR : 32 FUSE WICKMANN T4D DIN 41571 TROP	SS 020.7600	
F2	SS SCHMELZS.T16 5X20 FUSE SCHURTER 001.2516	332.3789	
K30	SN 12V 1XUM AG/AU 1A 30W RELAY 12V SIEMENS V23101-A6-A101	803.0673	802.3110.01
L10	LD STROMKOMP.-DROSSEL CHOKE	802.2795	802.3110.01
L20	LU DREIFACHDROSSEL TOROIDAL CORE CHOKE VAC ZKB610-145-51-M2	803.0609	802.3110.01

ROHDE&SCHWARZ	ÄZ	Datum Date	Schaltteiliste für Parts list for	Sachnummer Stock Nr.	Blatt Page
	30	0587	ZE NETZTEIL POWER SUPPLY	802.2814.01 SA	5

Kennzeichen Component No.	Benennung/Beschreibung Designation	Sachnummer Stock No.	enthalten in contained in
L21	LD SPEICHERDR.100UH 5A CHOKE VAC ZKB419/205-51-HZ	803.0444	802.3110.01
L22	LD 9UH BEI 6 A 0,012 OHM CHOKE SIEMENS B8211-B-C22	LD 026.4826	802.3110.01
L30	LD 25UH BEI 3 A 0,046 OHM CHOKE SIEMENS B82111-B-C24	LD 026.4849	802.3110.01
L32	LD UKW-DR.Z=750 OHM 50MHZ CHOKE VALVO 431202036641	LD 026.4578	802.3110.01
L40	LD 25UH BEI 3 A 0,046 OHM CHOKE SIEMENS B82111-B-C24	LD 026.4849	802.3110.01
L42	LD UKW-DR.Z=750 OHM 50MHZ CHOKE VALVO 431202036641	LD 026.4578	802.3110.01
L50	LD 25UH BEI 3 A 0,046 OHM CHOKE SIEMENS B82111-B-C24	LD 026.4849	802.3110.01
L52	LD UKW-DR.Z=750 OHM 50MHZ CHOKE VALVO 431202036641	LD 026.4578	802.3110.01
L60	LD UKW-DR.Z=750 OHM 50MHZ CHOKE VALVO 431202036641	LD 026.4578	802.3110.01
N1	BO UC2840J 0A2 SCH.REGL REG.PULSE WIDTH MODULATOR UNITRODE UC2840J	374.9904	802.3110.01
N30	BO SI3152V +15V2A0 VREGL VOLTAGE REGULATOR SANKEN SI-3152V	803.0615	802.3110.01
N40	BO SI3152V +15V2A0 VREGL VOLTAGE REGULATOR SANKEN SI-3152V	803.0615	802.3110.01
N50	BO UA723C ADJ0A1 VREGL VOLTAGE REGULATOR NSC LM723CN	BO 009.0190	802.3110.01
N60	BO LM7812CT +12V1A0 VREGL VOLTAGE REGULATOR NSC LM7812CT	BO 344.9641	802.3110.01
N70	BO CA3240AE 2XMOS OPAMP OPERATIONAL AMPLIFIER RCA CA3240AE	302.7040	802.3110.01
N71	BO CA3240AE 2XMOS OPAMP OPERATIONAL AMPLIFIER RCA CA3240AE	302.7040	802.3110.01
P1	VL WIRE-WRAP PIN WIRE-WRAP PIN BERG NR. 75 403-001	VL 088.4507	802.3110.01
P2	VL WIRE-WRAP PIN WIRE-WRAP PIN BERG NR. 75 403-001	VL 088.4507	802.3110.01

ROHDE&SCHWARZ	ÄZ	Datum Date	Schaltteilliste für Parts list for	Sachnummer Stock Nr.	Blatt Page
	30	0587	ZE NETZTEIL POWER SUPPLY	802.2814.01 SA	6

Kennzeichen Component No.	Benennung/Beschreibung Designation	Sachnummer Stock No.	enthalten in contained in
P3	VL WIRE-WRAP PIN WIRE-WRAP PIN BERG NR. 75 403-001	VL 088.4507	802.3110.01
P4	FP INDIREKT.STECKERL.36P. PIN CONNECTOR BERG 75160-102-36	FP 242.3600	802.3110.01
P5	FP INDIREKT.STECKERL.36P. PIN CONNECTOR BERG 75160-102-36	FP 242.3600	802.3110.01
P6	FP INDIREKT.STECKERL.36P. PIN CONNECTOR BERG 75160-102-36 2X3POL/PINS	FP 242.3600	802.3110.01
P7	VL WIRE-WRAP PIN WIRE-WRAP PIN BERG NR. 75 403-001	VL 088.4507	802.3110.01
P71	VL WIRE-WRAP PIN WIRE-WRAP PIN BERG NR. 75 403-001	VL 088.4507	802.3110.01
P73	VL WIRE-WRAP PIN WIRE-WRAP PIN BERG NR. 75 403-001	VL 088.4507	802.3110.01
P80	VL WIRE-WRAP PIN WIRE-WRAP PIN BERG NR. 75 403-001	VL 088.4507	802.3110.01
R1	RL 0,35W 1,50KOHM+-1%TK50 RESISTOR DRALORIC SMA0207/1,50K-F-D	RL 083.0732	802.3110.01
R2	RL 0,35W 3,24KOHM+-1%TK50 RESISTOR DRALORIC SMA0207/3,24K-F-D	RL 082.6843	802.3110.01
R3	RL 0,35W 1,74KOHM+-1%TK50 RESISTOR DRALORIC SMA0207/1,74K-F-D	RL 083.0784	802.3110.01
R4	RL 0,35W 604 OHM+-1%TK50 RESISTOR DRALORIC SMA/207/604OHM-F-C	RL 082.2425	802.3110.01
R5	RL 0,35W 10,0KOHM+-1%TK50 RESISTOR DRALORIC SMA0207/10K-F-D	RL 083.1297	802.3110.01
R6	TRIMMWERT / SELECTED		802.3110.01
R7	RL 0,35W 4,75KOHM+-1%TK50 RESISTOR DRALORIC SMA0207/4,75K-F-D	RL 083.1097	802.3110.01
R8	RL 0,35W 4,75KOHM+-1%TK50 RESISTOR DRALORIC SMA0207/4,75K-F-D	RL 083.1097	802.3110.01
R9	RL 0,35W 169 KOHM+-1%TK50 RESISTOR DRALORIC SMA/207/169K-F-C	RL 083.2164	802.3110.01
R10	TRIMMWERT / SELECTED		802.3110.01
R11	RL 0,35W 7,50KOHM+-1%TK50 RESISTOR DRALORIC SMA0207/7,5K-F-D	RL 083.1197	802.3110.01

ROHDE&SCHWARZ	Äz	Datum Date	Schaltteilliste für Parts list for	Sachnummer Stock Nr.	Blatt Page
	30	0587	ZE NETZTEIL POWER SUPPLY	802.2814.01 SA	7

Kennzeichen Component No.	Benennung/Beschreibung Designation	Sachnummer Stock No.	enthalten in contained in
R12	RS 0,5W10KOHM+-10%10X10X5 CERMET POTENTIOMETER T BOURNS 3386X1-103	RS 247.7526	802.3110.01
R13	RL 0,35W 10,0 OHM+-1%TK50 RESISTOR DRALORIC SMA0207/10OHM-F-D	RL 082.8852	802.3110.01
BIS/TO R17			
R18	RL 0,35W 4,75KOHM+-1%TK50 RESISTOR DRALORIC SMA0207/4,75K-F-D	RL 083.1097	802.3110.01
R19	RJ 2W 5,6 OHM+-5% METALOXID RESISTOR RESISTA WK5 5,6 OHM 5%	803.0480	802.3110.01
R20	RJ 1W 18 OHM+-5%TK200 RESISTOR RESISTA 18OHM+-5% TK200	451.5055	802.3110.01
R22	RD 0,8W 47 MIOHM+-3% WIRE-WOUND RESISTOR SAGE 1000S/0,04OHM/3%	RD 069.1458	802.3110.01
R50	RD 2.4W 100 OHM +-3% WIRE-WOUND RESISTOR SAGE 1200S/100OHM/3%	RD 080.0377	802.3110.01
R51	RL 0,35W 1KOHM+-1%TK50 RESISTOR DRALORIC SMA0207/1K-F-C	RL 082.2160	802.3110.01
R52	RL 0,35W 3,92KOHM+-1%TK50 RESISTOR RESISTA MK2	RL 083.1039	802.3110.01
R53	RL 0,35W 2,21KOHM+-1%TK50 RESISTOR DRALORIC SMA 0207/2,21K-F-C	RL 082.2477	802.3110.01
R54	RL 0,35W 56,2 OHM+-1%TK50 RESISTOR DRALORIC SMA0207/56,2OHM-F-D	RL 082.9571	802.3110.01
R55	RL 0,35W 3,32KOHM+-1%TK50 RESISTOR DRALORIC SMA0207/3,32K-F-D	RL 083.0990	802.3110.01
R56	RS 0,5W1KOHM+-10%10X10X5 CERMET POTENTIOMETER BOURNS 3386X-1-102	RS 247.5917	802.3110.01
R57	RL 0,35W 1KOHM+-1%TK50 RESISTOR DRALORIC SMA0207/1K-F-C	RL 082.2160	802.3110.01
R70	RL 0,35W 1,27KOHM+-1%TK50 RESISTOR DRALORIC SMA 0207/1,27K-F-C	RL 082.2490	802.3110.01
R71	RL 0,35W 1KOHM+-1%TK50 RESISTOR DRALORIC SMA0207/1K-F-C	RL 082.2160	802.3110.01
R73	RL 0,35W 1,37KOHM+-1%TK50 RESISTOR DRALORIC SMA0207/1,37K-F-D	RL 083.0690	802.3110.01
R74	RL 0,35W 1,21KOHM+-1%TK50 RESISTOR DRALORIC SMA0207/1,21K-F-D	RL 083.0655	802.3110.01

ROHDE&SCHWARZ	ÄZ	Datum Date	Schaltteiliste für Parts list for	Sachnummer Stock Nr.	Blatt Page
	30	0587	ZE NETZTEIL POWER SUPPLY	802.2814.01 SA	8

Kennzeichen Component No.	Benennung/Beschreibung Designation	Sachnummer Stock No.	enthalten in contained in
R76	RL 0,35W 20,0KOHM+-1%TK50 RESISTOR DRALORIC SMA/207/20K-F-C	RL 083.1522	802.3110.01
R77	RL 0,35W 29,4KOHM+-1%TK50 RESISTOR DRALORIC SMA0207/29,4K-F-C	RL 083.1622	802.3110.01
R78	RL 0,35W 28,7KOHM+-1%TK50 RESISTOR DRALORIC SMA/207/28,7K--FC	RL 083.1616	802.3110.01
R79	RL 0,35W 1,33KOHM+-1%TK50 RESISTOR DRALORIC SMA0207/1,33K-F-D	RL 083.0684	802.3110.01
R82	RL 0,35W 806 OHM+-1%TK50 RESISTOR DRALORIC SMA0207/806OHM-F-D	RL 083.0555	802.3110.01
R83	RL 0,35W 1KOHM+-1%TK50 RESISTOR DRALORIC SMA0207/1K-F-C	RL 082.2160	802.3110.01
R84	RL 0,35W 10,0KOHM+-1%TK50 RESISTOR DRALORIC SMA0207/10K-F-D	RL 083.1297	802.3110.01
R86	RL 0,35W 511 OHM+-1%TK50 RESISTOR DRALORIC SMA0207/511OHM-F-D	RL 083.0426	802.3110.01
R87	RL 0,35W 1KOHM+-1%TK50 RESISTOR DRALORIC SMA0207/1K-F-C	RL 082.2160	802.3110.01
R88	RL 0,35W 10,0KOHM+-1%TK50 RESISTOR DRALORIC SMA0207/10K-F-D	RL 083.1297	802.3110.01
R89	RL 0,35W 100KOHM+-1%TK50 RESISTOR DRALORIC SMA0207/100K-F-C	RL 082.1764	802.3110.01
R90	RL 0,35W 2,05KOHM+-1%TK50 RESISTOR DRALORIC SMA0207/2,05K-F-D	RL 083.0832	802.3110.01
R91	RL 0,35W 3,16KOHM+-1%TK50 RESISTOR DRALORIC SMA0207/3,16K-F-D	RL 083.0984	802.3110.01
R92	RL 0,35W 3,16KOHM+-1%TK50 RESISTOR DRALORIC SMA0207/3,16K-F-D	RL 083.0984	802.3110.01
R100	RL 0,35W 105 KOHM+-1%TK50 RESISTOR DRALORIC SMA0207/105K-F-C	RL 083.2029	802.3110.01
R101	RL 0,35W 41,2KOHM+-1%TK50 RESISTOR DRALORIC SMA0207/41,2K-F-C	RL 082.2319	802.3110.01
R102	TRIMMWERT / SELECTED		802.3110.01
R103	RL 0,35W 475 OHM+-1%TK50 RESISTOR DRALORIC SMA0207/475OHM-F-D	RL 083.0390	802.3110.01
R104	RL 0,35W5,11KOHM+-0,1%T25 RESISTOR DRALORIC SMA0207	RL 084.2500	802.3110.01

ROHDE&SCHWARZ	ÄZ	Datum Date	Schaltteiliste für Parts list for	Sachnummer Stock Nr.	Blatt Page
	30	0587	ZE NETZTEIL POWER SUPPLY	802.2814.01 SA	9

Kennzeichen Component No.	Benennung/Beschreibung Designation	Sachnummer Stock No.	enthalten in contained in
R105	RL 0,35W4,75KOHM+-0,1%T25 RESISTOR DRALORIC SMA/207/4,75K-B-E	RL 084.2445	802.3110.01
R106	RL 0,35W4,75KOHM+-0,1%T25 RESISTOR DRALORIC SMA/207/4,75K-B-E	RL 084.2445	802.3110.01
R107	RL 0,35W4,87KOHM+-0,1%T25 RESISTOR DRALORIC SMA0207	RL 084.2468	802.3110.01
R113	RL 0,35W 931 OHM+-1%TK50 RESISTOR DRALORIC SMA0207/931OHM-F-D	RL 083.0590	802.3110.01
R114	RL 0,35W 9,76KOHM+-1%TK50 RESISTOR DRALORIC SMA0207/9,76K-F-D	RL 083.1280	802.3110.01
R116	RL 0,35W 226 KOHM+-1%TK50 RESISTOR DRALORIC SMA0207/226K-F-C	RL 083.2287	802.3110.01
S1	FR SPANNUNGSWAEHLER M.SI VOLTAGE SELECTOR SCHURTER R&S-ZCHNG.803.0896	803.0896	
T1	ZM TRAFOEINHEIT TRANSFORMER UNIT	802.3091	
T2	LU SCHALTTRAFO TRANSFORMER	802.2808	802.3110.01
V1	AK BCY59IX NPN 45V 200MA TRANSISTOR SIEMENS BCY59IX	AK 010.5163	802.3110.01
V2	AM BUZ21 N 100V PMOSF POWER MOSFET SIEMENS BUZ21	AM 645.7300	802.3110.01
BIS/TO V6 V7	AE 1N5655AJAN 70V1 SUPPR SUPPRESSOR DIODE SIEMENS 1N5655A JAN	580.9091	802.3110.01
V8	AG BYW29/150 GL 150V 7A0 RECTIFIER VALVO BYW29/150	AG 300.6799	802.3110.01
V9	AK BCY79IX PNP 45V 200MA TRANSISTOR SIEMENS BCY79IX	AK 010.3777	802.3110.01
V10	AK 2N2222A NPN 40V 800MA TRANSISTOR VALVO 2N2222A	AK 010.5405	802.3110.01
V11	AG BYV21/45 SGL 45V 25A0 RECTIFIER VALVO BYV21/45	803.0473	
BIS/TO V14 V19	AG BYW29/150 GL 150V 7A0 RECTIFIER VALVO BYW29/150	AG 300.6799	802.3110.01

ROHDE&SCHWARZ	ÄZ	Datum Date	Schaltteiliste für Parts list for	Sachnummer Stock Nr.	Blatt Page
	30	0587	ZE NETZTEIL POWER SUPPLY	802.2814.01 SA	10

Kennzeichen Component No.	Benennung/Beschreibung Designation	Sachnummer Stock No.	enthalten in contained in
V20	AG BYS28-90 2GL 90V 12A5 RECTIFIER SIEMENS BYS28-90	803.0638	802.3110.01
V30	AG BYV29/500 GL 500V 7A4 RECTIFIER VALVO BYV 29/500	803.0996	802.3110.01
V31	AG BYV29/500 GL 500V 7A4 RECTIFIER VALVO BYV 29/500	803.0996	802.3110.01
V32	AD 1N4448 75V 0,15A UDI DIODE TEXAS INST 1N4448 GEGURTET	AD 012.0700	802.3110.01
V40	AG BYV29/500 GL 500V 7A4 RECTIFIER VALVO BYV 29/500	803.0996	802.3110.01
V41	AG BYV29/500 GL 500V 7A4 RECTIFIER VALVO BYV 29/500	803.0996	802.3110.01
V50	AG BYV29/500 GL 500V 7A4 RECTIFIER VALVO BYV 29/500	803.0996	802.3110.01
V51	AG BYV29/500 GL 500V 7A4 RECTIFIER VALVO BYV 29/500	803.0996	802.3110.01
V52	AD 1N4448 75V 0,15A UDI DIODE TEXAS INST 1N4448 GEGURTET	AD 012.0700	802.3110.01
V53	AE BZX79/C6V8 0,5W Z-DI ZENER DIODE VALVO BZX79/C6V8	AE 012.2478	802.3110.01
V54	AL BDT92 PNP 60V 10A0 TRANSISTOR VALVO BDT 92	803.0650	802.3110.01
V55	AK BCY59IX NPN 45V 200MA TRANSISTOR SIEMENS BCY59IX	AK 010.5163	802.3110.01
V56	AE UZ4736 36V 5.0W Z-DI ZENER DIODE UNITRODE UZ4736	803.0467	802.3110.01
V60	AG 1N4007 GL1000V 1A0 RECTIFIER AEG-TELEF 1N4007	AG 013.0310	802.3110.01
V70	AE BZX79/B5V6 0,5W Z-DI ZENER DIODE VALVO BZX79/B5V6	AE 012.5254	802.3110.01
V71	AD 1N4448 75V 0,15A UDI DIODE TEXAS INST 1N4448 GEGURTET	AD 012.0700	802.3110.01
V72	AE BZX79/C4V7 0,5W Z-DI ZENER DIODE VALVO BZX79/C4V7	AE 012.2432	802.3110.01
V73	AE BZX55/B5V1 0,5W Z-DI ZENER DIODE VALVO BZX55/B5V1	AE 262.5837	802.3110.01
V80	AD 1N4448 75V 0,15A UDI DIODE TEXAS INST 1N4448 GEGURTET	AD 012.0700	802.3110.01

ROHDE&SCHWARZ	ÄZ	Datum Date	Schaltteiliste für Parts list for	Sachnummer Stock Nr.	Blatt Page
	30	0587	ZE NETZTEIL POWER SUPPLY	802.2814.01 SA	11

Kennzeichen Component No.	Benennung/Beschreibung Designation	Sachnummer Stock No.	enthalten in contained in
V81	AD 1N4448 75V 0,15A UDI DIODE TEXAS INST 1N4448 GEGURTET	AD 012.0700	802.3110.01
V82	AD 1N4448 75V 0,15A UDI DIODE TEXAS INST 1N4448 GEGURTET	AD 012.0700	802.3110.01
V83	AE BZX79/C4V7 0,5W Z-DI ZENER DIODE VALVO BZX79/C4V7	AE 012.2432	802.3110.01
V84	AK BCY59IX NPN 45V 200MA TRANSISTOR SIEMENS BCY59IX	AK 010.5163	802.3110.01
V86	AE BZX79/C5V1 0,5W Z-DI ZENER DIODE VALVO BZX79/C5V1	AE 012.2449	802.3110.01
V87	AD 1N4448 75V 0,15A UDI DIODE TEXAS INST 1N4448 GEGURTET	AD 012.0700	802.3110.01
V88	AE BZX55/B4V7 0,5W Z-DI ZENER DIODE INTERMETAL ZPD4,7+-2,5%	AE 080.4014	802.3110.01
V100	AG MBR2540 SGL 40V 25A0 RECTIFIER MOTOROLA MBR2540 M.ZUBEHOER	AG 086.9930	
W49	DX KABEL (W49) CABLE (W49)	803.0409	802.3004
W50	DX KABEL (W50) CABLE (W50)	803.0415	802.3004
W51	DX KABEL (W51) CABLE (W51)	803.0421	802.3004
X3	FP KURZSCHL.BUCHSE OFFEN SHORTING PLUG BERG 76264-101	FP 342.1895	802.3110.01
BIS/TO X6			
X20	FV FLACHSTECKER GR4,8X0,8 PLUG VOGT&CO 3826 MS/0,8 VERZINNT	FV 545.4000	802.3110.01
X30	FV FLACHSTECKER 2,8X0,8 FLAT PLUG 2,8X0,8 VOGT 3775A/0,8/MS-S18	FV 279.1998	802.3110.01
X40	FV FLACHSTECKER 2,8X0,8 FLAT PLUG 2,8X0,8 VOGT 3775A/0,8/MS-S18	FV 279.1998	802.3110.01
X50	FV FLACHSTECKER 2,8X0,8 FLAT PLUG 2,8X0,8 VOGT 3775A/0,8/MS-S18	FV 279.1998	802.3110.01
X60	FV FLACHSTECKER 2,8X0,8 FLAT PLUG 2,8X0,8 VOGT 3775A/0,8/MS-S18	FV 279.1998	802.3110.01
X70	FV FLACHSTECKER 2,8X0,8 FLAT PLUG 2,8X0,8 VOGT 3775A/0,8/MS-S18	FV 279.1998	802.3110.01

ROHDE&SCHWARZ	ÄZ	Datum Date	Schaltteilliste für Parts list for	Sachnummer Stock Nr.	Blatt Page
	30	0587	ZE NETZTEIL POWER SUPPLY	802.2814.01 SA	12

Kennzeichen Component No.	Benennung/Beschreibung Designation	Sachnummer Stock No.	enthalten in contained in
X71	FV FLACHSTECKER 2,8X0,8 FLAT PLUG 2,8X0,8 VOGT 3775A/0,8/MS-S18	FV 279.1998	802.3110.01
X72	FV FLACHSTECKER 2,8X0,8 FLAT PLUG 2,8X0,8 VOGT 3775A/0,8/MS-S18	FV 279.1998	802.3110.01
X80	FP KURZSCHL.BUCHSE OFFEN SHORTING PLUG BERG 76264-101	FP 342.1895	802.3110.01
X100	VK RAENDELKL.ISOL.ROT KNURLED CLAMP ELMA BV 42267	VK 219.5300	
X101	VK RAENDELKL.ISOL.BLAU KNURLED CLAMP ELMA BV 42270	VK 219.5339	
Z1	FN NETZST.M.FILTER 3A MAINS SUPPLY-FILTER CORCOM 3EF2	803.0938	
Z2	LD FILTER 3NF 25A 10MHZ FILTER ERIE 1204-050	LD 453.7110	
Z3	LD FILTER 3NF 25A 10MHZ FILTER ERIE 1204-050	LD 453.7110	
Z6	LD 5MHZ/20DB 10A CHOKE ERIE R&S-ZCHNG.453.4404	LD 453.4404	802.3004
BIS/TO Z14			
			- ENDE -

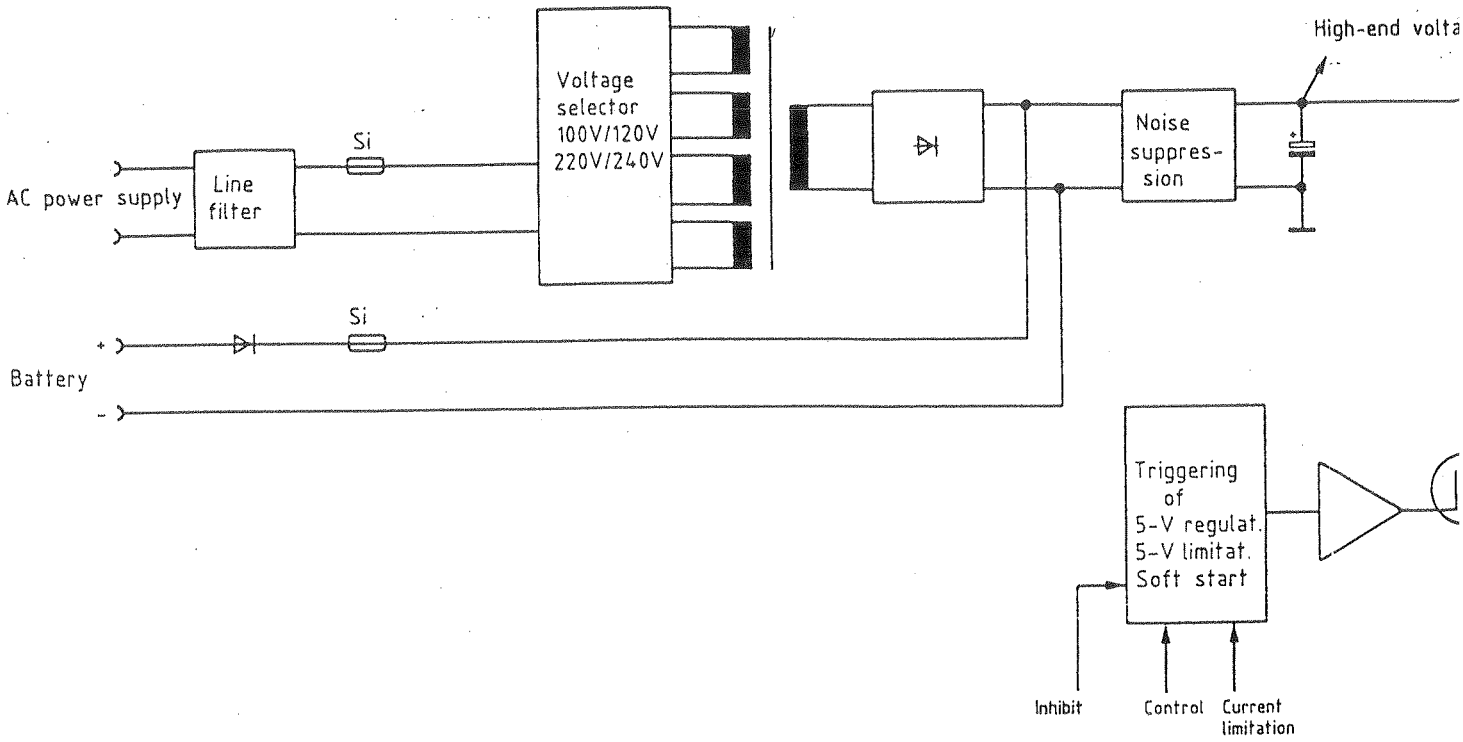

Fig.

802.2814.02

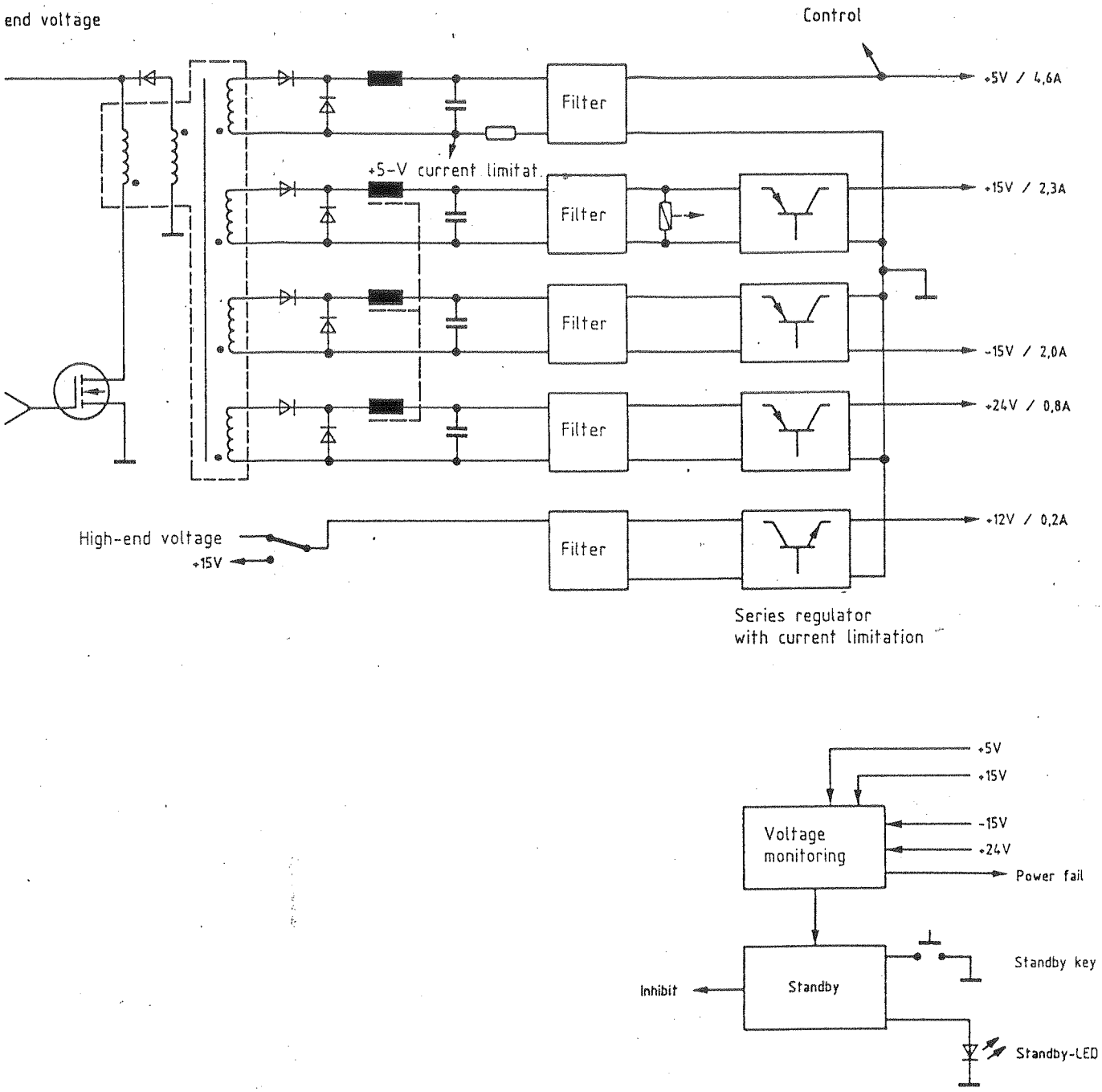

'ig. 5-5 Block diagram of power pack

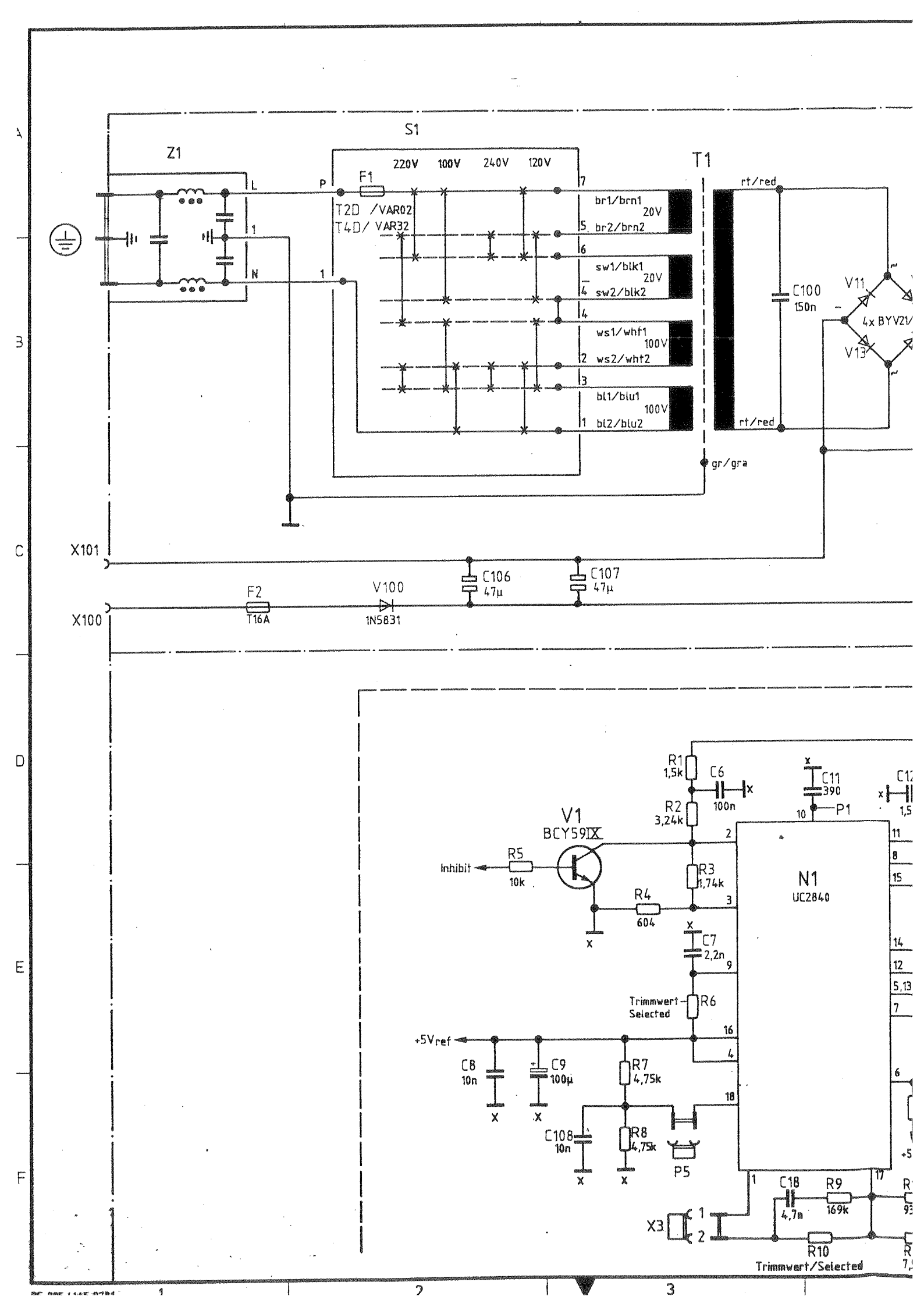
S1
Z1
220V
100V
240V
120V
T1
F1
T2D /VAR02
T4D/ VAR32
br1/brn1
20V
br2/brn2
sw1/blk1
20V
sw2/blk2
ws1/wht1
100V
ws2/wht2
bl1/blu1
100V
bl2/blu2
rt/red
gr/gra
C100
150n
V11
4x BYV21/
V13
X101
X100
F2
T16A
V100
1N5831
C106
47µ
C107
47µ
R1
1,5k
C6
100n
R2
3,24k
C11
390
P1
V1
BCY59IX
Inhibit
R5
10k
R3
1,74k
R4
604
N1
UC2840
C7
2,2n
Trimmwert
Selected
R6
+5Vref
C8
10n
C9
100µ
R7
4,75k
C108
10n
R8
4,75k
P5
X3
C18
4,7n
R9
169k
R10
Trimmwert/Selected

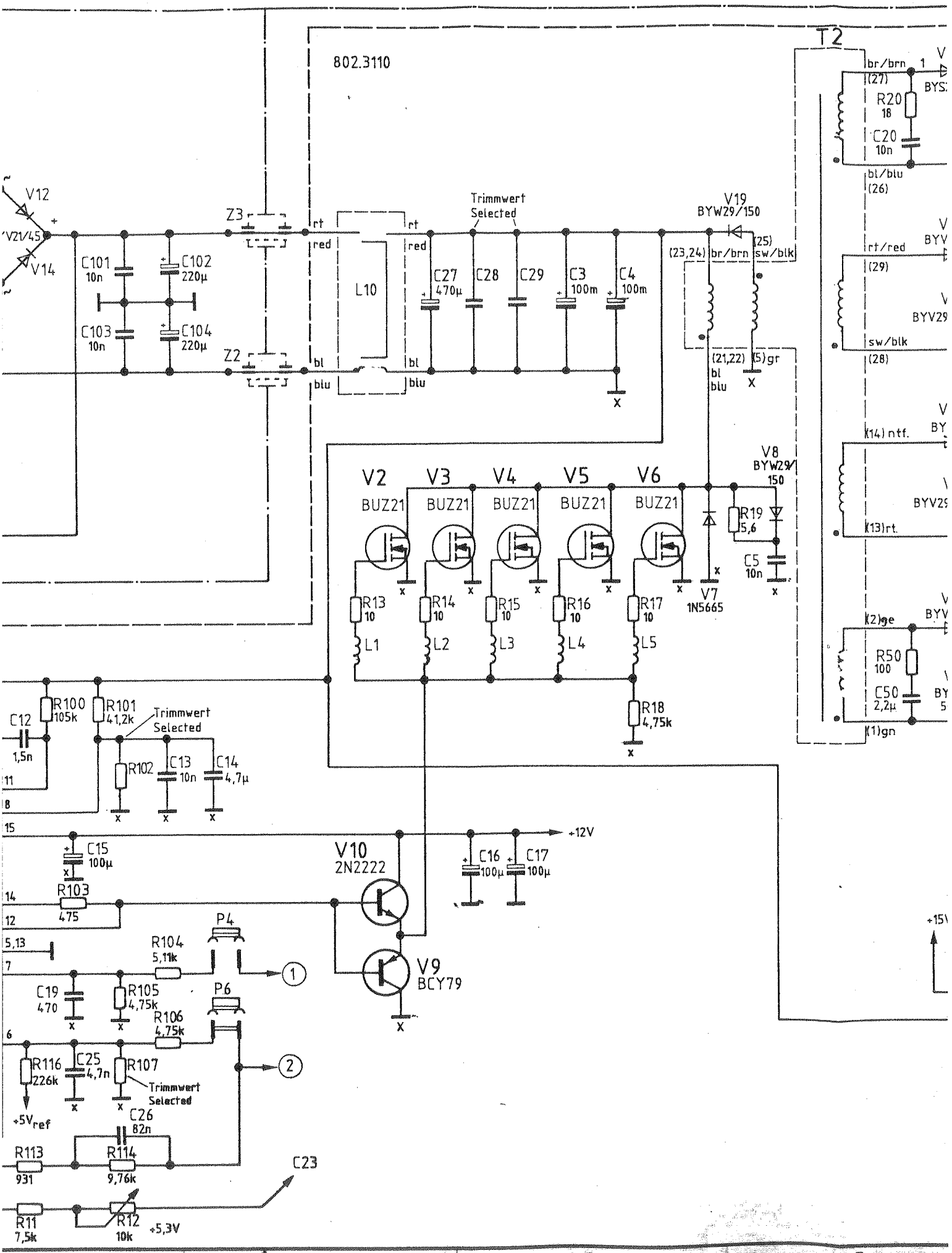
802.3110
T2
V12
V21/45
V14
C101
10n
C102
220µ
C103
10n
C104
220µ
Z3
Z2
rt
red
bl
blu
L10
Trimmwert
Selected
C27
470µ
C28
C29
C3
100m
C4
100m
V19
BYW29/150
(23,24) br/brn
(25) sw/blk
(21,22) bl
blu
(5) gr
br/brn
(27)
R20
18
C20
10n
bl/blu
(26)
rt/red
(29)
sw/blk
(28)
(14) ntf.
(13) rt.
(2) ge
R50
100
C50
2,2µ
(1) gn
V2
V3
V4
V5
V6
BUZ21
R13
10
R14
10
R15
10
R16
10
R17
10
L1
L2
L3
L4
L5
R18
4,75k
V8
BYW29/150
R19
5,6
C5
10n
V7
1N5665
R100
105k
R101
41,2k
C12
1,5n
R102
C13
10n
C14
4,7µ
C15
100µ
R103
475
+12V
V10
2N2222
C16
100µ
C17
100µ
V9
BCY79
P4
R104
5,11k
C19
470
R105
4,75k
P6
R106
4,75k
R116
226k
C25
4,7n
R107
Trimmwert
Selected
+5V ref
C26
82n
R113
931
R114
9,76k
C23
R11
7,5k
R12
10k
+5,3V
+15V

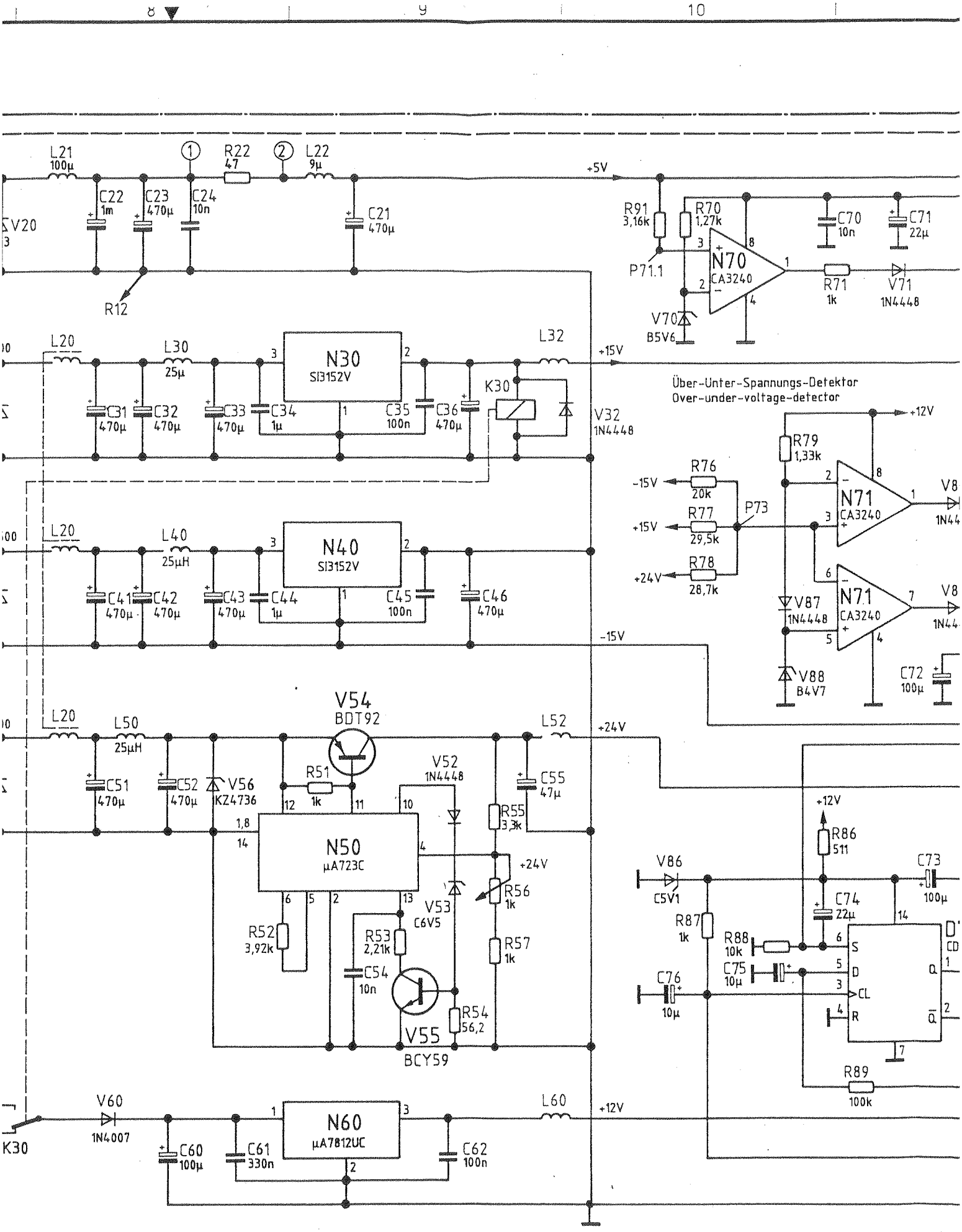

ROHDE & SCHWARZ				D	35533	8.86	CO	1KGA	Tag
	B	32954	11.85	LS	E	35547	5.87	IB	Bearb. 6.85
	C	32954	4.86	CO	F	38951	11.87	IB	Gepr
	Änd. Zust	Änderungs-Mitteilung	Datum	Name	Änd. Zust	Änderungs-Mitteilung	Datum	Name	Norm

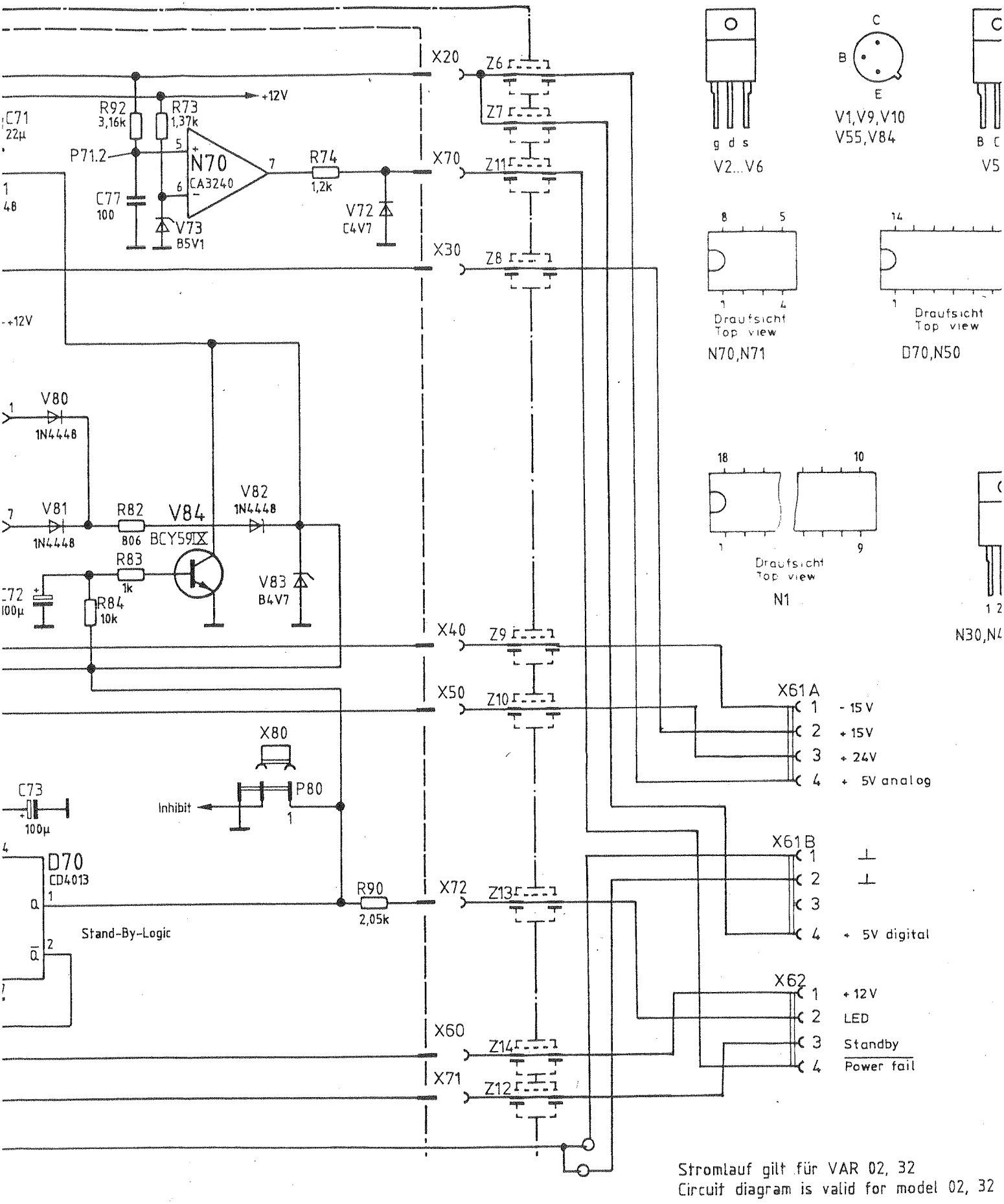

Stromlauf gilt für VAR 02, 32
Circuit diagram is valid for model 02, 32

ag	Name	Benennung		Zeichn.-Nr
85	FL	CMT Netzteil / Power Supply	Z	802.2814 S
		zu Gerät: CMT		reg. i V 802.2020 V erste Z

Ansicht und Leitungsführung Bauteilseite
View of tracks on component side

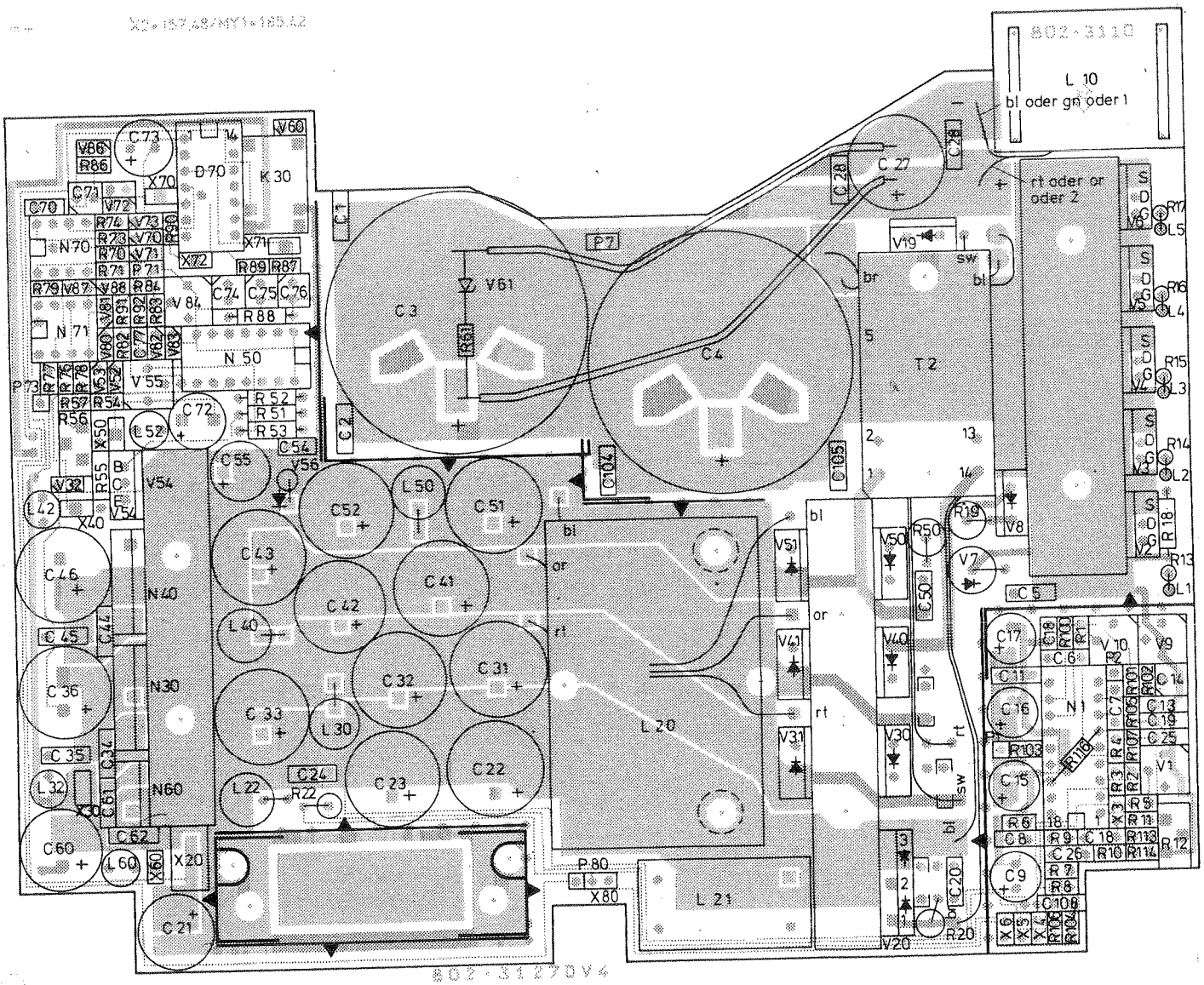

Ansicht und Leitungsführung Lötseite
View of tracks on solder side

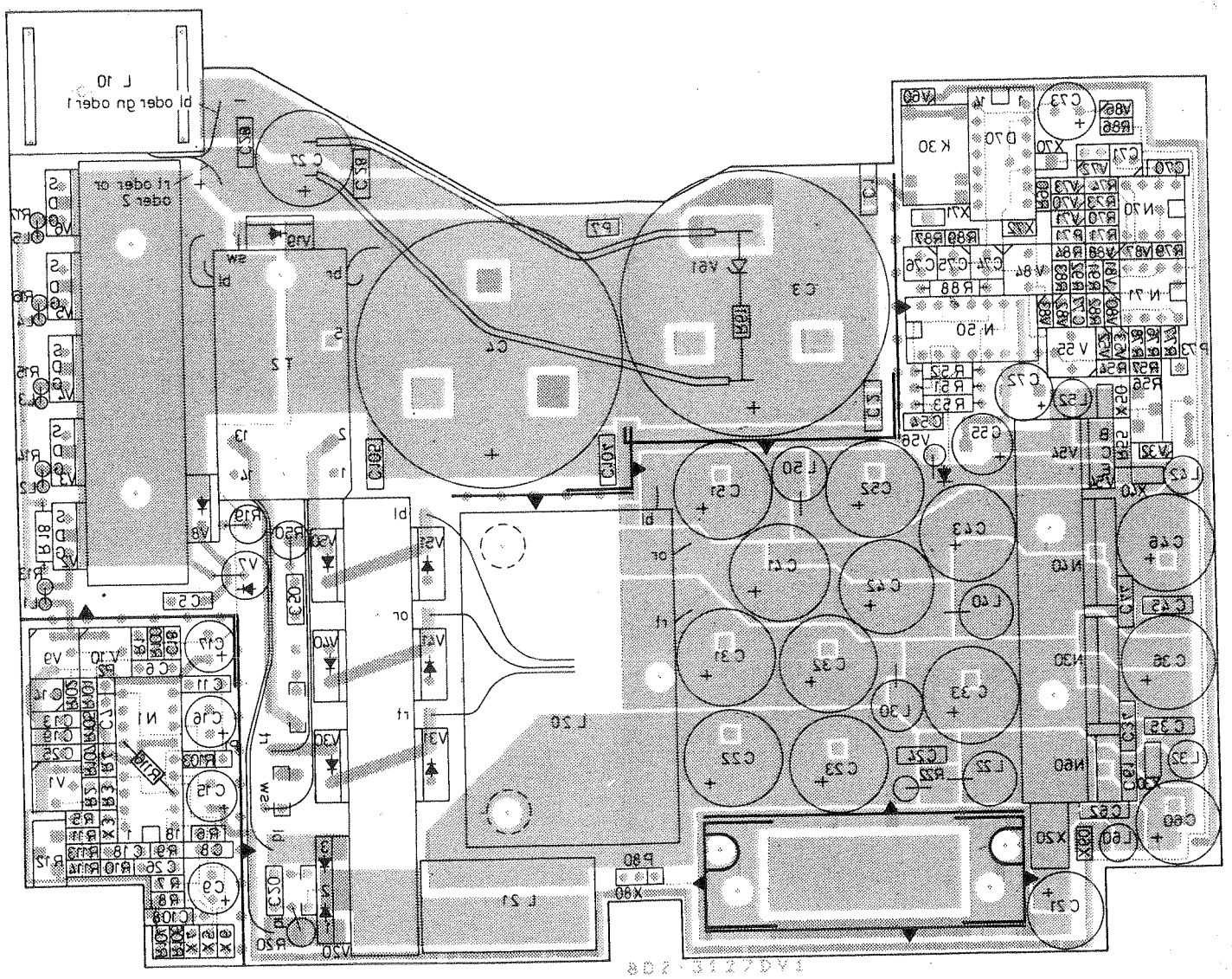

Änd. Zust.	Änderungs-Mitteilung	Tag	Name

Maße ohne Toleranzangabe

Maßstab 1 : 1

Halbzeug, Werkstoff

1 KGA	Tag	Name
Bearb.	02.85	LS
Gepr.		
Norm		

Benennung

Netzteil
Power supply

Z

ROHDE&SCHWARZ

zu Gerät CMT

Zeichn.-Nr. 802.3110

Blatt-Nr. 2 v. Bl.

reg. i. V. 802.2020 V

erste Z. 802.2814

07 6001 81

ROHDE & SCHWARZ

SERVICE INSTRUCTIONS

Digital Unit

802.4517.02

Printed in West Germany

Contents

5 Service Manual for Digital Unit

(See circuit diagram 802.4517 S and block diagram)

5.1 Function Description

The module comprises a complete processor with several special digital function groups. The processor is the central control and arithmetic unit of the instrument. It controls the complete hardware, can respond to certain peripheral events, controls simple and complex test sequences and carries out various calculations.

The digital unit contains its own 16-bit data bus and its own 20-bit address bus.

Fig. 5-1 shows the block diagram of the digital unit with the most important data and control lines where a link may consist of several signal lines.

Further units are also present on the module (RF counter, AF counter, A/D converter) whose functions are closely associated with the digital unit.

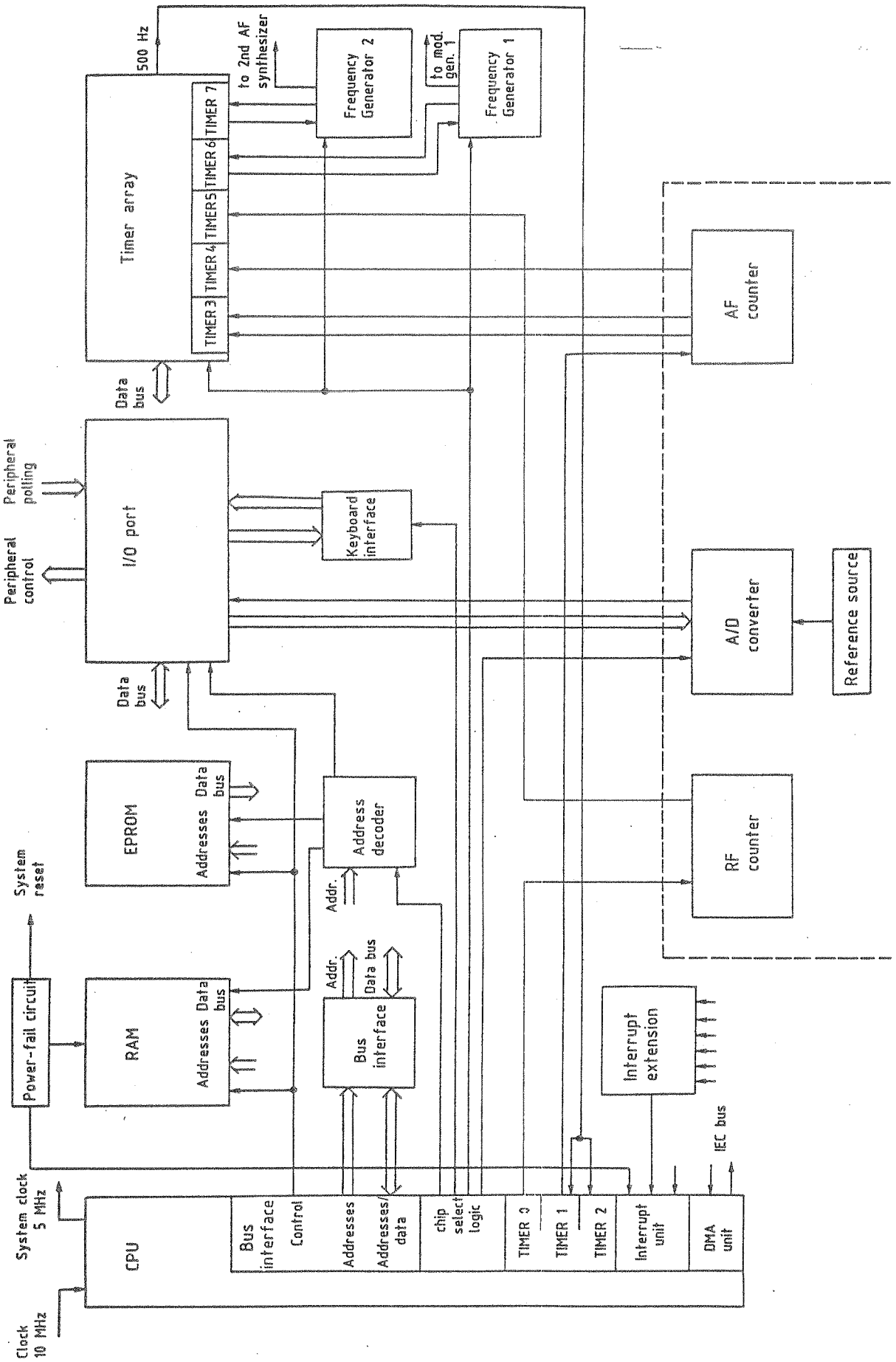

Fig. 5-1 Block diagram of the digital unit

5.1.1 CPU

A CPU of type 80186 is used. This 16-bit CPU uses an external clock of 10 MHz; the system clock is then 5 MHz.

The CPU has certain special features which are described below:

a) Bus interface

In addition to a number of control and status lines leading to and from the bus interface, this unit generates the most significant 4 address bits on special lines. The least significant 16 address bits are available on a common bus in multiplex mode with the 16 data bits. It is therefore necessary to temporarily store the least significant 16 address bits in an external bus interface (see Section 5.1.2).

b) Chip select logic

The CPU contains a chip select unit which provides various chip select outputs. This unit can be programmed such that the outputs only become active with certain address areas of the address bus.

A differentiation must be made between the memory and peripheral selection outputs. Seven selection outputs are available for driving peripheral modules. The CPU can be programmed for memory mapped or separate I/O area organization. The I/O area organization is used in this instrument. The peripheral selection outputs drive the I/O modules, the timer array, the A/D converter and the divider.

There are 6 memory selection outputs present which are not sufficient for the complete memory space of the instrument. They therefore first control, together with address lines, an external address decoder which may also be simply omitted as a result of the preselection in the CPU-internal chip select unit (see Section 5.1.3).

c) **Timer unit**

This unit contains 3 programmable timer/counter functions which may operate separately or as a group.

Timers 0 and 1 have external inputs and outputs. Timer 0 provides the gate time for the RF counter and timer 1 the gate time for the AF counter. These gate times can only be generated using an external reference clock of 500 MHz provided by the timer array.

Timer 2 is only used internally as the real-time clock of the system. It causes an internal interrupt every 10 ms which increments the clock.

d) **Interrupt unit**

The interrupt unit contains an interrupt controller with a non-maskable input (NMI) and four maskable inputs (INTØ to INT3). The NMI input is connected to the power-fail circuit. An interrupt is generated as soon as the operating voltage drops below a defined value and measures for data protection are initiated (see Section 5.1.11).

The priority of inputs INTØ to INT3 can be selected. Since their number would be insufficient for the instrument, input INTØ is expanded into six interrupt inputs using an external interrupt extension (see Section 5.1.7).

Examples of interrupt generators:
rotary pulse generator (spinwheel), keyboard, IEC bus, Centronics interface.

e) **DMA unit**

The DMA unit enables the fastest possible data transfer with peripheral units. This transmission mode is used together with the IEC bus.

5.1.2 Bus Interface

Since the microprocessor activates data and addresses in multiplex mode, it is necessary to store the addresses temporarily. Addresses AØ to A18 are loaded into intermediate memories. The control pulse required (ALE) is provided directly by the microprocessor.

The data bus DØ to D15 is controlled via line drivers. The CPU also provides the control signals for the data direction and activation in this case.

The address and data buses are local buses of the digital unit.

5.1.3 Address Decoder

The address decoder is responsible for selection of the various address areas of the complete memory. The input is provided by the CPU with certain address lines and lines from the chip select logic. A further signal ($\overline{BHE}$) can be used by the CPU to trigger individual bytes from the memory with 16-bit word organization. The decoder provides single signals at the output with which the individual memory areas can be directly selected.

5.1.4 RAM

The RAM of the digital unit has a capacity of 16 Kbyte and is divided into 16x8 Kbit. Static CMOS-RAMs are used. These low power types enable battery back-up when the power supply is switched off or if it fails. For this reason, the RAM has its own power supply which is automatically switched over in the power failure circuit (see Section 5.1.11).

5.1.5 EPROM

The read-only memory has six IC sockets which can be occupied by type 27256 chips. The total memory capacity is then 192 Kbyte.

5.1.6 I/O Port

This function unit is used to trigger and scan peripheral units. The link to the microprocessor consists of the common data bus, control signals from the CPU and triggering via the address decoder. The I/O data transmission is implemented in different ways. Most of I/O lines are provided by the programmable port chips D17 and D18.

D17 is programmed as a pure output port with 25 output signals which are mainly used as strobe signals for controlling a series of peripheral shift registers. This port also provides the serial data line DO-L and the associated clock line CPS-L.

D18 is programmed to service 12 outputs and 12 inputs. The outputs also include a number of strobe lines, the serial data line DO-S and the associated clock line CPS-S. Data from peripheral modules can be read in via the inputs.

The port chips D45 and D46 represent a pure output port which provides further strobe and control lines and controls the A/D converter.

5.1.7 Interrupt Extension

It is necessary to extend the CPU-internal interrupt controller since the number of peripheral modules which require an interrupt is larger than the number of CPU interrupt inputs.

An interrupt expander with six inputs is therefore connected prior to the CPU interrupt line INTØ.

Fig. 5-2 shows the block diagram of the circuit.

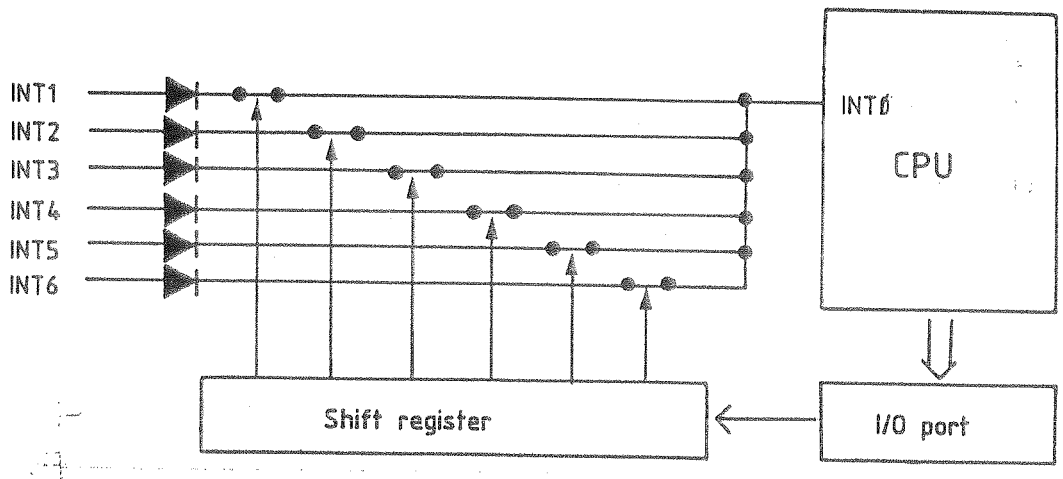

Fig. 5-2 Interrupt extension

The additional interrupt lines INT1 to INT6 are connected to a common point via a wired-OR link with serial, intermediate switches; the lines are taken to the interrupt line INTØ. The switches are normally closed. If an interrupt is requested via one of the lines INT1 to INT6, the CPU starts the interrupt program and a polling sequence. A serial shift register is accessed via the I/O port which in turn accesses the interrupt switches. The interrupt program first causes all switches to open. Signal INTØ becomes inactive. The switches are then closed in sequence. The source of interrupt is identified as soon as signal INTØ at the CPU interrupt input becomes active again and the program can service the actual interrupt request.

The shift register (D33) is controlled by the I/O ports with the following signals:

CPS-S	Clock line
DO-S	Data line
HFC	Strobe line

The switches (D36, D38) are analog switches.

5.1.8 Timer Array

The timer array consists of a single chip. It contains 5 independent timers which can be programmed as clocks, counters or pulse generators. Data exchange with the CPU takes place via the common data bus, additional control lines control the chip. The timer array also provides a 500-Hz reference clock to generate the gate times in the CPU-internal timers.

Summary of assignment, use and operating modes of the timers:

Timer	Operating mode	Use
3	Counter	Evaluation of AF counter
4	Counter	Evaluation of AF counter
5	Counter	Evaluation of RF counter
6	Divider	Control of frequency generator 1
7	Divider	Control of frequency generator 2

5.1.9 Frequency Generators

Two identical frequency generator circuits are present in the digital unit whose output signal is required to generate programmable sinewave frequencies. The output signal ist first extended in a monostable flip-flop and then passed on at a lower level to suppress interferences.

Each frequency generator consists of an intermediate memory, an adder, an input memory and a programmable decrementer.

Timer 6 assumes the function of the decrementer for generator 1.

Timer 7 assumes the function of the decrementer for generator 2.

The generator numbers are as follows:

+ Generator 1 (D20 to D23)
+ Generator 2 (D25 to D28)

5.1.10 Keyboard Interface

The interface comprises a 10x8 matrix with the keys located at the points of intersection. The 10 columns of the matrix are linked to an output port (D29, D30), the 8 rows to an input port (D31). Both ports are linked to the CPU via the data bus. In addition, selection lines and read or write lines lead to the two ports. A pressed key triggers an interrupt and the associated interrupt program then applies a test bit to all 10 rows in succession and polls the input port. In this manner, the point of intersection in the matrix at which a key was pressed can be determined.

5.1.11 Power-Fail Circuit

The power-fail circuit receives an active power-fail signal as soon as the monitored supply voltage drops below a critical value and then triggers an interrupt. The CPU then carries out a save routine and transmits a signal to the power-fail circuit following the last access to the RAM. The RAM supply is then switched over to the battery and the RAMs are transferred to low power mode. The power-fail signal enters the inactive status when the instrument is switched on and the critical value of the supply voltage has been exceeded. The circuit then triggers a system reset and subsequently switches over the RAM supply from the battery to the power pack. The control signal CSRB for low power mode of the RAMs is cancelled at the same time.

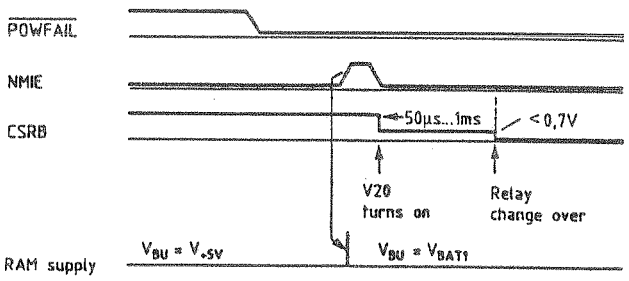

Sequence following transition of signal $\overline{\text{POWFAIL}}$ from High to Low.

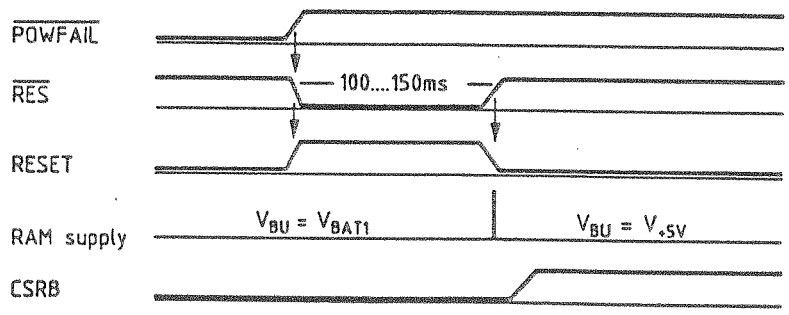

Sequence following transition of signal $\overline{\text{POWFAIL}}$ from Low to High.

5.1.12 A/D Converter Unit

The A/D converter unit consists of the A/D converter and a reference voltage source used as the system reference (see Fig. 5-3).

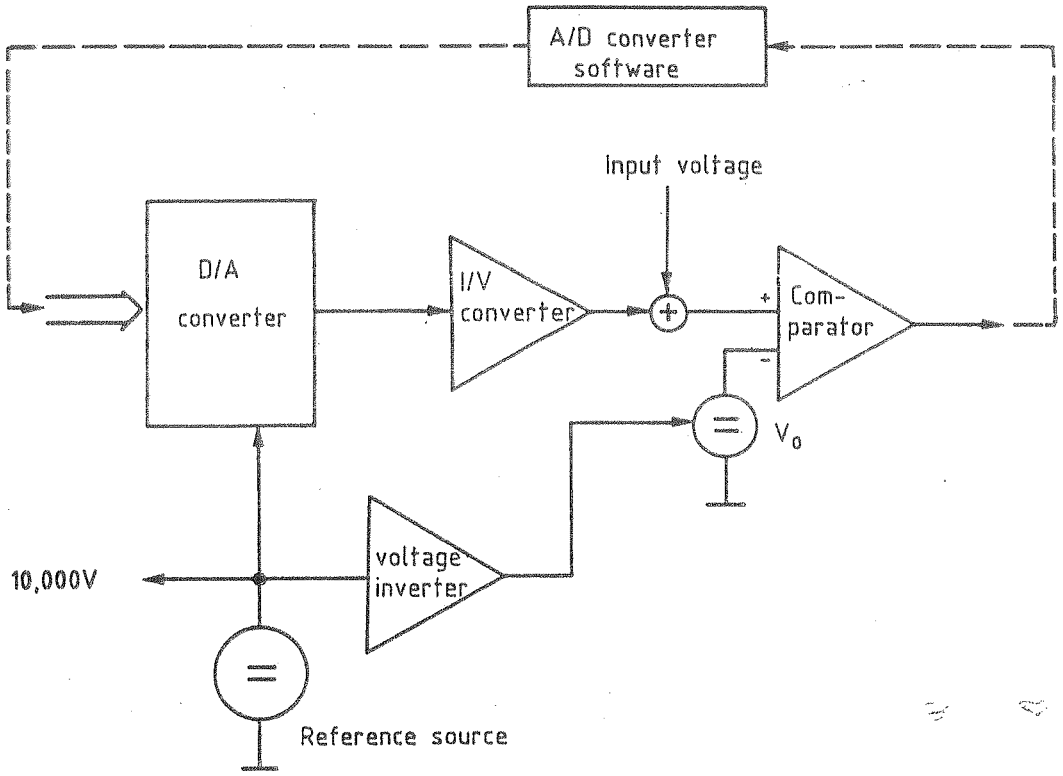

Fig. 5-3 Block diagram of the A/D converter unit

5.1.12.1 Reference Source

The reference source is designed using a temperature-compensated reference diode buffered via an operational amplifier. The voltage should be 10.000 V ±1 mV and can be set exactly using a trimmer.

5.1.12.2 A/D Converter

The A/D converter is used for digital acquisition of several analog variables and operates according to the principle of successive approximation.

Apart from the hardware, the A/D converter also contains a software program which drives the D/A converter with a 10-bit binary value during conversion of the applied input voltage. The D/A converter outputs a proportional current which is then converted into a proportional negative voltage by an inverting I/V converter. This voltage and the positive input voltage are applied to a comparator via a summation point.

If the load-independent voltage $V_O=0$ and the comparator output is High, the input voltage is higher than the voltage at the I/V converter output. This means that the D/A converter has been driven by the software with a binary value which is too small.

The program can supply the D/A converter with a more accurate binary value, however, since the software polls the comparator and has thus access to the result of the comparison. The final result is obtained after 10 such steps.

The load-independent voltage V_O at the comparator is obtained from the reference voltage and has a value of -100 mV. This enables negative voltages down to -200 mV to be detected. The upper input voltage limit of 10.2 V is above the reference voltage and is achieved by increasing the gain of the I/V converter.

5.1.13 RF Counter
(See Fig. 5-4)

The RF counter indicates the frequency of the applied RF signal in the range from 1 to 1000 MHz; the signal is first amplified, limited and then applied to a frequency divider and a transistor stage which improves the slew rate for low frequencies. The signals thus conditioned are applied via a diode switch to the divider chain consisting of a 3-bit ECL divider, an ECL/TTL converter and a 12-bit TTL divider. All dividers in the chain have binary outputs which are connected to parallel/serial shift registers which are read by the processor. The output of the divider chain is connected to a special timer chip which evaluates the divided frequency further.

A test is made whether the undivided signal or the signal divided by 4 is to be applied to the divider chain; the signal divided by 4 is first measured with a resolution of 10 kHz; the signal is measured without the predivider if the frequency is below 400 MHz, otherwise the divider remains connected.

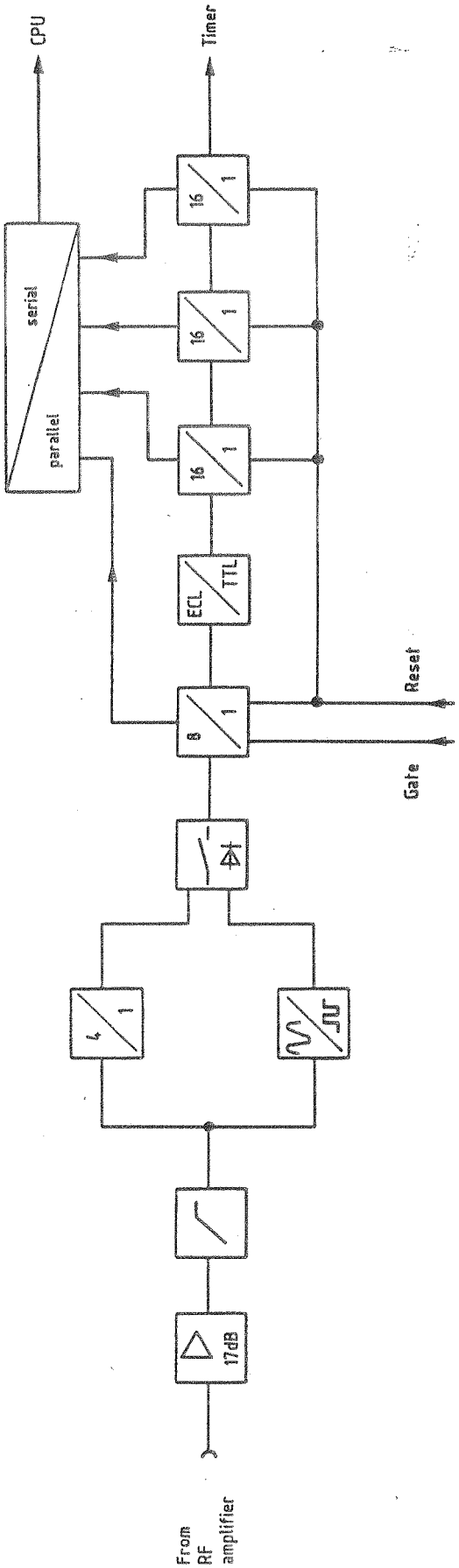

Fig. 5-4 Block diagram of the RF counter

5.1.14 AF Counter

The AF counter counts frequencies in the range from 10 Hz to 500 kHz. The signal to be counted is first amplified and then applied to two comparators. The reference signal of the comparators is then obtained from the positive and negative peak values of the counted signal. The output signals are applied to a clock-edge-controlled flip-flop with reset and then processed further in a special timer chip.

The advantage of this comparator control by a reference signal which depends on the amplitude of the input signal is the excellent processing even of noisy signals, as shown in Figs. 5-5 to 5-7.

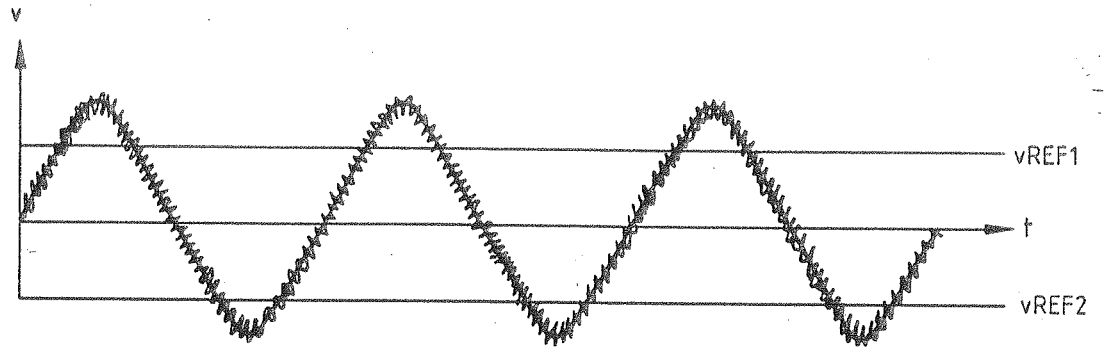

Fig. 5-5 Noisy input signal of comparators with reference voltage indicated

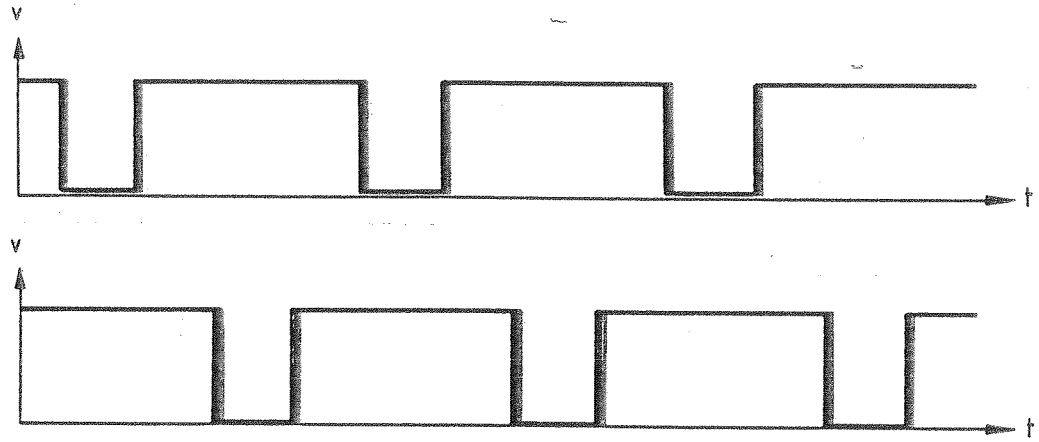

Fig. 5-6 Output signal of comparators with phase jitter

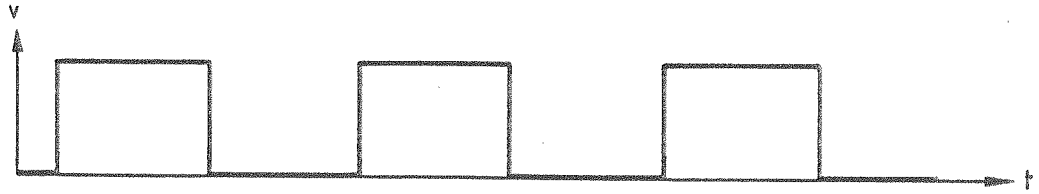

Fig. 5-7 Output signal of the flip-flop without phase jitter

5.2 Testing and Adjustment

5.2.1 Testing the A/D Converter Unit

The signal ground (SIGGND) must be connected to the main ground (GND). The plug-in jumper X75 must be inserted when operating the digital unit.

5.2.1.1 Reference Source

Measure the reference voltage against the signal ground (X1.A,B31) at test point P12 using a voltmeter. The voltage should be +10.000 V ±1 mV and can be adjusted if necessary using R109.

5.2.1.2 A/D Converter

Measure the DC voltage at test point P11 after testing and adjusting the reference source. It should be -100 mV ±5 mV compared to the signal ground. Apply a binary data word (X value) to the input of the D/A converter N100.

Apply a test voltage V_t to the signal input (MESSDC) (plug X1.A31 and test point P10) referred to the signal ground SIGGND (plug X1.A,B30). Vary the test voltage V_t such that the voltage range (see following table) associated with the X value is passed through.

The TTL level at pin 7 of comparator N102 must change from High to Low if V_t is changed to higher values. The comparator voltage V_t associated with the changeover point must be within the tolerance associated with the X value.

The following table lists examples for three different X values:

X value	Tolerance within which the comparator changes from High to Low	
	V_t	
	Lower limit	Upper limit
0	-240 mV	-160 mV
512	+4.990 V	+5.290 V
1023	+10.190 V	+10.750 V

5.3 Troubleshooting

Are the supply voltages +5 V and V_{BU} present ?

- No → Test power pack and leads.
- Yes ↓

Is the 5-MHz system clock present ? (CPU, D1 pin 56)

- No → Is external 10-MHz clock applied ? (connector X7)
  - No → Check clock source and leads.
  - Yes → Check CPU (D1) and replace if necessary.
- Yes ↓

Check plug-in jumpers. X20,X21,X27 present ?

- No → Insert plug-in jumpers.
- Yes ↓

Check power-fail circuit. Signals V_{BU}, CSRB, RESET present ?

- No → A
- Yes ↓

Are blocking CPU signals at active level ? (e.g. DMA, interrupt)

- Yes → Eliminate level error or check interrupt extension logic.
- No ↓

Are RAMs and EPROMs correctly addressed ? (addresses, data, control signals)

- No → Check bus driver and address decoder.
- Yes ↓

Continue troubleshooting with logic analyzer, emulator, oscilloscope.

A

Power-fail circuit faulty.
Is the signal $\overline{\text{POWFAIL}}$ correct ?

No → $\overline{\text{POWFAIL}}$ signal line and power pack.

Yes ↓

Is the signal $\overline{\text{RES}}$ correct ?

No → Check D47, D48 and their circuitry.

Yes ↓

Is the signal RESET correct ?

No → Check $\overline{\text{RES}}$ and RESET lines. Are both lines OK ?

Yes ↓

Change changeover of RAM supply. Check timing of signal CSRB.

No → Eliminate fault.

Yes ↓

Check CPU (D1) and replace if necessary.

ROHDE & SCHWARZ
MÜNCHEN

Schaltteillisten
Stromläufe
Bestückungspläne

Parts lists
Circuit diagrams
Components plans

R 29500 Bl. 2

Kennz. Comp.No.	Benennung Designation	Sachnummer Stock No.	Hersteller Manufacturer	Bezeichnung Designation	enthalten in contained in
C4 ..9	CK 100NF+-5%63V5RM MKT CAPACITOR	CK 099.2930	WIMA	MKS/2/63/0,1UF/5%	
C10	CC 10NF-20+50%7X8R4000 CAPACITOR	CC 087.7525	VALVO	2222 63051 64051103	
C17	CK 100NF+-5%63V5RM MKT CAPACITOR	CK 099.2930	WIMA	MKS/2/63/0,1UF/5%	
C20 ..26	CC 10NF-20+50%7X8R4000 CAPACITOR	CC 087.7525	VALVO	2222 63051 64051103	
C27	CE 10UF -10+50% 63V 9X13 ELECTROLYTIC CAPACITOR	CE 022.7650	ROEDERST	ELKOEK10/63	
C28	CK 100NF+-5%63V5RM MKT CAPACITOR	CK 099.2930	WIMA	MKS/2/63/0,1UF/5%	
C29	CK 100NF+-5%63V5RM MKT CAPACITOR	CK 099.2930	WIMA	MKS/2/63/0,1UF/5%	
C30	CC 10NF-20+50%7X8R4000 CAPACITOR	CC 087.7525	VALVO	2222 63051 64051103	
C31	CK 100NF+-5%63V5RM MKT CAPACITOR	CK 099.2930	WIMA	MKS/2/63/0,1UF/5%	
C32	CE 2,2UF-10+50% 63V 9X13 ELECTROLYTIC CAPACITOR	CE 022.7637	ROEDERST	ELKO EK 2/63	
C33	CK 100NF+-5%63V5RM MKT CAPACITOR	CK 099.2930	WIMA	MKS/2/63/0,1UF/5%	
C34	CC 10NF-20+50%7X8R4000 CAPACITOR	CC 087.7525	VALVO	2222 63051 64051103	
C36	CK 100NF+-5%63V5RM MKT CAPACITOR	CK 099.2930	WIMA	MKS/2/63/0,1UF/5%	
C37	CK 100NF+-5%63V5RM MKT CAPACITOR	CK 099.2930	WIMA	MKS/2/63/0,1UF/5%	
C40	CC 10NF-20+50%7X8R4000 CAPACITOR	CC 087.7525	VALVO	2222 63051 64051103	
C41	CC 10NF-20+50%7X8R4000 CAPACITOR	CC 087.7525	VALVO	2222 63051 64051103	
C42	CC 100PF+-2%4X5N750 CAPACITOR	CC 087.6906	VALVO	2222 678 58101	
C43	CC 1NF+-10%63V K2000 CERAMIC CAPACITOR	CC 022.0784	VALVO	2222 63051 102	
C44	CC 10NF-20+50%7X8R4000 CAPACITOR	CC 087.7525	VALVO	2222 63051 64051103	
C45	CC 10NF-20+50%7X8R4000 CAPACITOR	CC 087.7525	VALVO	2222 63051 64051103	
C46	CC 10NF-20+50%7X8R4000 CAPACITOR	CC 087.7525	VALVO	2222 63051 64051103	
C47	CC 100PF+-2%4X5N750 CAPACITOR	CC 087.6906	VALVO	2222 678 58101	
C48	CC 1NF+-10%63V K2000 CERAMIC CAPACITOR	CC 022.0784	VALVO	2222 63051 102	
C49 ..52	CC 10NF-20+50%7X8R4000 CAPACITOR	CC 087.7525	VALVO	2222 63051 64051103	
C60	CE 2200UF-10+50%6,3V12X30 ELECTROLYTIC CAPAITOR	CE 534.1133	SIEMENS	B41010-B2228-T	
C61	CE 2200UF-10+50%6,3V12X30 ELECTROLYTIC CAPAITOR	CE 534.1133	SIEMENS	B41010-B2228-T	
C62	CE 22UF-10+50% 63V 9X13 ELECTROLYTIC CAPACITOR	CE 006.7120	ROEDERST	EK 00 CB 222 J	
C63	CE 22UF-10+50% 63V 9X13 ELECTROLYTIC CAPACITOR	CE 006.7120	ROEDERST	EK 00 CB 222 J	
C64	CK 100NF+-5%63V5RM MKT CAPACITOR	CK 099.2930	WIMA	MKS/2/63/0,1UF/5%	
C65	CC 1NF+-10%63V K2000 CERAMIC CAPACITOR	CC 022.0784	VALVO	2222 63051 102	
C66	CE 2200UF-10+50%6,3V12X30 ELECTROLYTIC CAPAITOR	CE 534.1133	SIEMENS	B41010-B2228-T	
C67	CE 2200UF-10+50%6,3V12X30 ELECTROLYTIC CAPAITOR	CE 534.1133	SIEMENS	B41010-B2228-T	
C68	CK 100NF+-5%63V5RM MKT CAPACITOR	CK 099.2930	WIMA	MKS/2/63/0,1UF/5%	
C69	CC 1NF+-10%63V K2000 CERAMIC CAPACITOR	CC 022.0784	VALVO	2222 63051 102	
C72	CC 1NF+-10%63V K2000 CERAMIC CAPACITOR	CC 022.0784	VALVO	2222 63051 102	
C73	CK 100NF+-5%63V5RM MKT CAPACITOR	CK 099.2930	WIMA	MKS/2/63/0,1UF/5%	
C74	CC 1NF+-10%63V K2000 CERAMIC CAPACITOR	CC 022.0784	VALVO	2222 63051 102	
C75	CE 22UF-10+50% 63V 9X13 ELECTROLYTIC CAPACITOR	CE 006.7120	ROEDERST	EK 00 CB 222 J	
C76	CK 100NF+-5%63V5RM MKT CAPACITOR	CK 099.2930	WIMA	MKS/2/63/0,1UF/5%	

Kennz. Comp.No.	Benennung Designation	Sachnummer Stock No.	Hersteller Manufacturer	Bezeichnung Designation	enthalten in contained in
C77	CC 1NF+-10%63V K2000 CERAMIC CAPACITOR	CC 022.0784	VALVO	2222 63051 102	
C78	CK 100NF+-5%63V5RM MKT CAPACITOR	CK 099.2930	WIMA	MKS/2/63/0,1UF/5%	
C79	CE 22UF-10+50% 63V 9X13 ELECTROLYTIC CAPACITOR	CE 006.7120	ROEDERST	EK 00 CB 222 J	
C80	CC 1NF+-10%63V K2000 CERAMIC CAPACITOR	CC 022.0784	VALVO	2222 63051 102	
C81	CK 100NF+-5%63V5RM MKT CAPACITOR	CK 099.2930	WIMA	MKS/2/63/0,1UF/5%	
C101	CC 82PF+-2%6X7NPO CAPACITOR	CC 087.6535	VALVO	2222 678 10829	
C105	CC 10NF-20+50%7X8R4000 CAPACITOR	CC 087.7525	VALVO	2222 63051 64051103	
C106	CE 10UF+-20%35V RD5X5 ELECTROLYTIC CAPACITOR	803.0667	NATION PAN	ECE-A1VKS-100	
C107	CC 10NF-20+50%7X8R4000 CAPACITOR	CC 087.7525	VALVO	2222 63051 64051103	
C109	CC 10NF-20+50%7X8R4000 CAPACITOR	CC 087.7525	VALVO	2222 63051 64051103	
C110	CE 10UF+-20%35V RD5X5 ELECTROLYTIC CAPACITOR	803.0667	NATION PAN	ECE-A1VKS-100	
C111	CC 10NF-20+50%7X8R4000 CAPACITOR	CC 087.7525	VALVO	2222 63051 64051103	
C112	CC 100PF+-2%4X5N750 CAPACITOR	CC 087.6906	VALVO	2222 678 58101	
C113	CC 10NF-20+50%7X8R4000 CAPACITOR	CC 087.7525	VALVO	2222 63051 64051103	
C200	CE 100UF+-20%25V RD8X9,5 ELECTROLYTIC CAPACITOR	803.0580	MATSUSHITA	ECE-A1ESS-101	
C201	CE 100UF+-20%25V RD8X9,5 ELECTROLYTIC CAPACITOR	803.0580	MATSUSHITA	ECE-A1ESS-101	
C202	CE 100UF+-20%25V RD8X9,5 ELECTROLYTIC CAPACITOR	803.0580	MATSUSHITA	ECE-A1ESS-101	
C207	CE 10UF+-20%35V RD5X5 ELECTROLYTIC CAPACITOR	803.0667	NATION PAN	ECE-A1VKS-100	
C208	CE 10UF+-20%35V RD5X5 ELECTROLYTIC CAPACITOR	803.0667	NATION PAN	ECE-A1VKS-100	
C210	CE 10UF+-20%35V RD5X5 ELECTROLYTIC CAPACITOR	803.0667	NATION PAN	ECE-A1VKS-100	
C211	CE 2,2UF+-20%20V 5X 4X 7 ELECTROLYTIC CAPACITOR	CE 022.8104	ROEDERSTEI	ETR 1 2,2/20 20%	
C212	CE 2,2UF+-20%20V 5X 4X 7 ELECTROLYTIC CAPACITOR	CE 022.8104	ROEDERSTEI	ETR 1 2,2/20 20%	
C213	CE 100UF+-20%25V RD8X9,5 ELECTROLYTIC CAPACITOR	803.0580	MATSUSHITA	ECE-A1ESS-101	
C214	CE 100UF+-20%25V RD8X9,5 ELECTROLYTIC CAPACITOR	803.0580	MATSUSHITA	ECE-A1ESS-101	
C300	CC 100NF+-10% 50V5K1200LR CAPACITOR	CC 092.0777	AEROVOX	CKR05BX104KLEVELR	
C301	CC 10NF-20+50%7X8R4000 CAPACITOR	CC 087.7525	VALVO	2222 63051 64051103	
C302	CC 4,7PF+-0,25PF3X4NPO CAPACITOR	CC 087.6387	VALVO	2222 678 09478	
C303	CC 100NF+-10% 50V5K1200LR CAPACITOR	CC 092.0777	AEROVOX	CKR05BX104KLEVELR	
C320	CC 100NF+-10% 50V5K1200LR CAPACITOR	CC 092.0777	AEROVOX	CKR05BX104KLEVELR	
C321	CC 10NF-20+50%7X8R4000 CAPACITOR	CC 087.7525	VALVO	2222 63051 64051103	
C322	CC 100NF+-10% 50V5K1200LR CAPACITOR	CC 092.0777	AEROVOX	CKR05BX104KLEVELR	
C323	CC 100NF+-10% 50V5K1200LR CAPACITOR	CC 092.0777	AEROVOX	CKR05BX104KLEVELR	
C324	CC 4,7PF+-0,25PF3X4NPO CAPACITOR	CC 087.6387	VALVO	2222 678 09478	
C326	CK 100NF+-5%63V5RM MKT CAPACITOR	CK 099.2930	WIMA	MKS/2/63/0,1UF/5%	
C330	CC 100NF+-10% 50V5K1200LR CAPACITOR	CC 092.0777	AEROVOX	CKR05BX104KLEVELR	
C331	CE 470UF+-20%25V12,5X12,5 ELECTROLYTIC CAPACITOR	803.0715	MATSUSHITA	ECE-A1ESS-471U	
C332	CC 10NF-20+50%7X8R4000 CAPACITOR	CC 087.7525	VALVO	2222 63051 64051103	
C333	CC 2,2NF+-10%5X6R2000 CAPACITOR	CC 087.7060	VALVO	2222 63051 222	
C334	CC 10NF-20+50%7X8R4000 CAPACITOR	CC 087.7525	VALVO	2222 63051 64051103	

Kennz. Comp.No.	Benennung Designation	Sachnummer Stock No.	Hersteller Manufacturer	Bezeichnung Designation	enthalten in contained in
C335	CC 10NF-20+50%7X8R4000 CAPACITOR	CC 087.7525	VALVO	2222 63051 64051103	
C336	CC 100NF+-10% 50V5K1200LR CAPACITOR	CC 092.0777	AEROVOX	CKR05BX104KLEVELR	
C340	CC 100NF+-10% 50V5K1200LR CAPACITOR	CC 092.0777	AEROVOX	CKR05BX104KLEVELR	
C342	CC 10NF-20+50%7X8R4000 CAPACITOR	CC 087.7525	VALVO	2222 63051 64051103	
C343	CC 100NF+-10% 50V5K1200LR CAPACITOR	CC 092.0777	AEROVOX	CKR05BX104KLEVELR	
C344	CC 10NF-20+50%7X8R4000 CAPACITOR	CC 087.7525	VALVO	2222 63051 64051103	
C345	CC 560PF+-10%3X4R2000 CAPACITOR	CC 087.7002	VALVO	2222 63051 561	
C346	CC 10NF-20+50%7X8R4000 CAPACITOR	CC 087.7525	VALVO	2222 63051 64051103	
D1	BC R80186 16B.CPU CPU	BC 393.1211	AMD	R80186	
D2	BL SN74LS245N 8XBUS-TRSCV IC 8XBUS TRSCV SN74LS245N	300.8833	TEXAS	SN74LS245N	
D3	BL SN74LS245N 8XBUS-TRSCV IC 8XBUS TRSCV SN74LS245N	300.8833	TEXAS	SN74LS245N	
D4	BL SN74LS373N 8BIT-D-REG. BL SN74LS373N 8BIT-D-REG.	336.7543	TEXAS	SN74LS373N	
D5	BL SN74LS373N 8BIT-D-REG. BL SN74LS373N 8BIT-D-REG.	336.7543	TEXAS	SN74LS373N	
D6	BL SN74LS375N 2X2BIT-D-RG DUAL 2BIT-D-LATCH	328.2281	TEXAS	SN74LS375N	
D7	BL SN74LS155AN 2X1:4-DEMU SN74LS155N 2X1:4-DEMUX	328.2246	TEXAS	SN74LS155AN	
D8	HS SOFTWARE CMT V PROM	802.5336			802.5213.01
D9	HS SOFTWARE CMT VI PROM	802.5342			802.5213.01
D10	HS SOFTWARE CMT I PROM	802.5288			802.5213.01
D11	HS SOFTWARE CMT II PROM	802.5307			802.5213.01
D12	HS SOFTWARE CMT III PROM	802.5313			802.5213.01
D13	HS SOFTWARE CMT IV PROM	802.5320			802.5213.01
D14	BL SN74LS155AN 2X1:4-DEMU SN74LS155N 2X1:4-DEMUX	328.2246	TEXAS	SN74LS155AN	
D15	BC HM6264LP15 8KX8B.SRAM SRAM	344.7410	HITACHI	HM6264LP15	
D16	BC HM6264LP15 8KX8B.SRAM SRAM	344.7410	HITACHI	HM6264LP15	
D17	BC D8255A PROGR.I/O-IF I/O-PORT	086.9830	INTEL	P8255A (PLASTIK)(-5)	
D18	BC D8255A PROGR.I/O-IF I/O-PORT	086.9830	INTEL	P8255A (PLASTIK)(-5)	
D19	BC AM9513DC TIMING CONTR TIMING CONTROLER	BC 339.4039	AMD	AM9513DC	
D20	BL SN74LS373N 8BIT-D-REG. BL SN74LS373N 8BIT-D-REG.	336.7543	TEXAS	SN74LS373N	
D21	BL SN74LS283N 4-BIT-ADD. IC SN74LS283N 4-BIT-ADD.	283.1760	TEXAS	SN74LS283N	
D22	BL SN74LS283N 4-BIT-ADD. IC SN74LS283N 4-BIT-ADD.	283.1760	TEXAS	SN74LS283N	
D23	BL SN74LS273N 8BIT-D-REG. 8BIT-D-REGISTER	214.8998	TEXAS	SN74LS273N	
D24	BL SN74LS123N 2/MONOFLOP IC MONOFLOP SN74LS85N	235.8468	TEXAS	SN74LS123N	
D25	BL SN74LS373N 8BIT-D-REG. BL SN74LS373N 8BIT-D-REG.	336.7543	TEXAS	SN74LS373N	
D26	BL SN74LS283N 4-BIT-ADD. IC SN74LS283N 4-BIT-ADD.	283.1760	TEXAS	SN74LS283N	
D27	BL SN74LS283N 4-BIT-ADD. IC SN74LS283N 4-BIT-ADD.	283.1760	TEXAS	SN74LS283N	
D28	BL SN74LS273N 8BIT-D-REG. 8BIT-D-REGISTER	214.8998	TEXAS	SN74LS273N	
D29	BL SN74LS373N 8BIT-D-REG. BL SN74LS373N 8BIT-D-REG.	336.7543	TEXAS	SN74LS373N	
D30	BL SN74LS375N 2X2BIT-D-RG DUAL 2BIT-D-LATCH	328.2281	TEXAS	SN74LS375N	

Kennz. Comp.No.	Benennung Designation	Sachnummer Stock No.	Hersteller Manufacturer	Bezeichnung Designation	enthalten in contained in
D31	BL SN74LS245N 8XBUS-TRSCV IC 8XBUS TRSCV SN74LS245N	300.8833	TEXAS	SN74LS245N	
D32	BL CD4021BE 8BIT SH.REG SHIFT REGISTER	BL 086.7096	RCA	CD4021BE	
D33	BL CD4094BE 8BIT SH.REG SHIFT REGISTER	BL 586.7726	RCA	CD4094BE	
D36	BL MC14066BAL 4X ANALOGSW ANALOG SWITCH	BL 418.0135	MOTOROLA	MC14066BAL	
D38	BL MC14066BAL 4X ANALOGSW ANALOG SWITCH	BL 418.0135	MOTOROLA	MC14066BAL	
D39	BL 74F04PC 6XINVERTER HEX-INVERTER	BL 344.6588	FAIRCHILD	74F04PC	
D41	BL SN74LS32N 4/2INP.OR IC OR GATE SN74LS32N	266.4687	TEXAS	SN74LS32N	
D42	BL MM74HC02N 4X2IN.NORG QUAD 2-INPUT NOR GATE	BL 571.3142	MOTOROLA	MC74HC02N	
D43	BL MM74HC74N 2XD-FLIPFL DUAL D FLIP-FLOP	BL 571.3171	NSC	MM74HC74N	
D44	BL SN74LS122N MONOFLOP IC MONOFLOP SN74LS122N	303.8957	TEXAS	SN74LS122N	
D45	BL SN74LS373N 8BIT-D-REG. BL SN74LS373N 8BIT-D-REG.	336.7543	TEXAS	SN74LS373N	
D46	BL SN74LS373N 8BIT-D-REG. BL SN74LS373N 8BIT-D-REG.	336.7543	TEXAS	SN74LS373N	
D47	BL MM74C914N 6XSCHM.TRIG HEX SCHMITT TRIGGER	BL 282.3423	NSC	MM74C914N	
D48	BL CD4011BE 4X2IN.NANDG NAND GATE	BL 252.7337	RCA	CD4011BE	
D51	BL CD4094BE 8BIT SH.REG SHIFT REGISTER	BL 586.7726	RCA	CD4094BE	
D52	BL CD4052BE 2X4CHAN.MUX MULTIPLEXER/DEMULTIPLEXER	BL 243.1200	MOTOROLA	MC14052BCP	
D200	BL SN74LS74AN 2/D-FLIPFL. IC FLIP-FLOP SN74LS74N	266.7934	TEXAS	SN74LS74N	
D300	BL CA3199E 4:1 DIVID DIVIDER	372.1106	RCA	CA3199E	
D301	BL SP8735BDC 8:1DIVID UHF DIVIDER	BL 300.6176	PLESSEY	SP8735BDC	
D302	BL SN74LS26N 4/2INP.NAND IC SN74LS26N 4/2INP.NAND	280.7567	TEXAS	SN74LS26N	
D303	BL CD4021BE 8BIT SH.REG SHIFT REGISTER	BL 086.7096	RCA	CD4021BE	
D304	BL CD4021BE 8BIT SH.REG SHIFT REGISTER	BL 086.7096	RCA	CD4021BE	
D305	BL SN74S197N 4B.-COUNTER 4BIT-COUNTER	334.3570	TEXAS	SN74S197N	
D306	BL SN74LS393N 2XBIN.ZAEHL IC 2XBIN.COUNT.SN74LS393N	300.6982	TEXAS	SN74LS393N	
G1	EB 3,4V LITHIUM-BATTERIE LI BATTERY	565.1687	SAFT	LS 3 CNA	
K1	SR 5 V 1XU DIL RELAY	SR 340.4551	ELECTROL	RA 30421051	
L1	LD 25UH BEI 3 A 0,046 OHM CHOKE	LD 026.4849	SIEMENS	B82111-B-C24	
L2	LD 50UH BEI 0,3A 2,9 OHM CHOKE	LD 026.4649	SIEMENS	B82111-A-C17	
L3	LD 50UH BEI 0,3A 2,9 OHM CHOKE	LD 026.4649	SIEMENS	B82111-A-C17	
L100	LD 100 UH10%8,000HM0,084A CHOKE	LD 067.3101	DELEVAN	DROSSEL1025-68	
L101	LD 100 UH10%8,000HM0,084A CHOKE	LD 067.3101	DELEVAN	DROSSEL1025-68	
L300	LD 1000UH10%72,00HM0,028A CHOKE	LD 037.8005	DELEVAN	DROSSEL1025-92	
L302	LD 1000UH10%72,00HM0,028A CHOKE	LD 037.8005	DELEVAN	DROSSEL1025-92	
L326	LD 1000UH10%72,00HM0,028A CHOKE	LD 037.8005	DELEVAN	DROSSEL1025-92	
N100	BJ AD7520KN 9B.D/A-CONV D/A-CONVERTER	BJ 300.6499	ANALOG DEV	AD7520KN	
N101	BO LF411CN JFET OPAMP OPERATIONAL AMPLIFIER	349.3058	NSC	LF411CN	
N102	BO LM311H COMPAR COMPARATOR	234.4469	RAYTHEON	LM311H	

Kennz. Comp.No.	Benennung Designation	Sachnummer Stock No.	Hersteller Manufacturer	Bezeichnung Designation	enthalten in contained in
N103	BO LF412CN 2XFET OPAMP OPERATIONAL AMPLIFIER	356.0521	NSC	LF412CN	
N201	BO LF157J BIFET OPAMP OPERATIONAL AMPLIFIER	BO 343.1530	MOTOROLA	LF157J	
N202	BO LF412CN 2XFET OPAMP OPERATIONAL AMPLIFIER	356.0521	NSC	LF412CN	
N203	BO TL820CN 2X COMPAR COMPARATOR	230.2278	TEXAS	TL820CN	
N300	BM OM350R ANTENNEN-VERST BROADBAND AMPLIFIER	803.0838	VALVO	OM350R SPEZ.	
N302	BO LF156J BIFET OPAMP OPERATIONAL AMPLIFIER	BO 645.7251	MOTOROLA	LF156J	
P1 ..14	VL WIRE-WRAP PIN WIRE-WRAP PIN	VL 088.4542	BERG	NR. 75 403-003	
P21 ..24	VL WIRE-WRAP PIN WIRE-WRAP PIN	VL 088.4542	BERG	NR. 75 403-003	
P26 ..28	VL WIRE-WRAP PIN WIRE-WRAP PIN	VL 088.4542	BERG	NR. 75 403-003	
R4	RL 0,35W 301 OHM+-1%TK50 RESISTOR	RL 083.0210	DRALORIC	SMA0207/301OHM-F-D	
R6	RL 0,35W 1KOHM+-1%TK50 RESISTOR	RL 082.2160	DRALORIC	SMA0207/1K-F-C	
R7 ..12	RN 9X4,7KOHM+-2% SIL10 H5 NETWORK	RN 327.0804	BOURNS	4310R-101-472	
R13	RL 0,35W 1KOHM+-1%TK50 RESISTOR	RL 082.2160	DRALORIC	SMA0207/1K-F-C	
R14	RL 0,35W 1KOHM+-1%TK50 RESISTOR	RL 082.2160	DRALORIC	SMA0207/1K-F-C	
R15	RL 0,35W 100 OHM+-1%TK50 METALFILM-RESISTOR	RL 082.6543	DRALORIC	SMA0207/100/HM-F-D	
R16	RN 5X3,9KOHM+-2%SIL 6 H5 RESISTOR NETWORK	RN 317.9273	BOURNS	4306R-101-392	
R17	RL 0,35W 332 OHM+-1%TK50 RESISTOR	RL 083.0255	DRALORIC	SMA0207/332OHM-F-D	
R18	RL 0,35W 100 OHM+-1%TK50 METALFILM-RESISTOR	RL 082.6543	DRALORIC	SMA0207/100/HM-F-D	
R19	RL 0,35W 100 OHM+-1%TK50 METALFILM-RESISTOR	RL 082.6543	DRALORIC	SMA0207/100/HM-F-D	
R20	RL 0,35W 100 OHM+-1%TK50 METALFILM-RESISTOR	RL 082.6543	DRALORIC	SMA0207/100/HM-F-D	
R21	RL 0,35W 100 OHM+-1%TK50 METALFILM-RESISTOR	RL 082.6543	DRALORIC	SMA0207/100/HM-F-D	
R23	RL 0,35W 3,32KOHM+-1%TK50 RESISTOR	RL 083.0990	DRALORIC	SMA0207/3,32K-F-D	
R24	RL 0,35W 3,32KOHM+-1%TK50 RESISTOR	RL 083.0990	DRALORIC	SMA0207/3,32K-F-D	
R25	RL 0,35W 3,32KOHM+-1%TK50 RESISTOR	RL 083.0990	DRALORIC	SMA0207/3,32K-F-D	
R26	RL 0,35W 2,21KOHM+-1%TK50 RESISTOR	RL 082.2477	DRALORIC	SMA 0207/2,21K-F-C	
R27	RL 0,35W 10,0KOHM+-1%TK50 RESISTOR	RL 083.1297	DRALORIC	SMA0207/10K-F-D	
R28	RL 0,35W 22,1KOHM+-1%TK50 RESISTOR	RL 083.1545	DRALORIC	SMA/207/22,1K-F-C	
R29	RL 0,35W 3,01KOHM+-1%TK50 RESISTOR	RL 083.0961	DRALORIC	SMA0207/3,01K-F-D	
R30	RL 0,35W 35,7KOHM+-1%TK50 RESISTOR	RL 083.1700	DRALORIC	SMA0207/35,7K-F-C	
R31	RL 0,35W 4,75KOHM+-1%TK50 RESISTOR	RL 083.1097	DRALORIC	SMA0207/4,75K-F-D	
R32	RL 0,35W 12,1KOHM+-1%TK50 RESISTOR	RL 083.1351	DRALORIC	SMA0207/12,1K-F-D	
R33	RL 0,35W 100 OHM+-1%TK50 METALFILM-RESISTOR	RL 082.6543	DRALORIC	SMA0207/100/HM-F-D	
R34	RL 0,35W 5,11KOHM+-1%TK50 RESISTOR	RL 082.2348	DRALORIC	SMA0207/5,11K-F-C	
R35	RL 0,35W 4,75KOHM+-1%TK50 RESISTOR	RL 083.1097	DRALORIC	SMA0207/4,75K-F-D	
R36	RL 0,35W 12,1KOHM+-1%TK50 RESISTOR	RL 083.1351	DRALORIC	SMA0207/12,1K-F-D	
R37	RL 0,35W 100 OHM+-1%TK50 METALFILM-RESISTOR	RL 082.6543	DRALORIC	SMA0207/100/HM-F-D	
R38	RL 0,35W 5,11KOHM+-1%TK50 RESISTOR	RL 082.2348	DRALORIC	SMA0207/5,11K-F-C	
R39	RN 7X4,7KOHM+-2% SIL 8 RESISTOR NETWORK	RN 572.1550	BOURNS	4308R-101-472	

Kennz. Comp.No.	Benennung Designation	Sachnummer Stock No.	Hersteller Manufacturer	Bezeichnung Designation	enthalten in contained in
R40	RL 0,35W 3,32KOHM+-1%TK50 RESISTOR	RL 083.0990	DRALORIC	SMA0207/3,32K-F-D	
R41	RL 0,35W 1MOHM+-1%TK50 RESISTOR	RL 082.7862	DRALORIC	SMA0207/1M-F-D	
R42	RL 0,35W 4,75KOHM+-1%TK50 RESISTOR	RL 083.1097	DRALORIC	SMA0207/4,75K-F-D	
R43	RL 0,35W 10,0KOHM+-1%TK50 RESISTOR	RL 083.1297	DRALORIC	SMA0207/10K-F-D	
R50	RL 0,35W 10,0KOHM+-1%TK50 RESISTOR	RL 083.1297	DRALORIC	SMA0207/10K-F-D	
R52	RL 0,35W 4,75KOHM+-1%TK50 RESISTOR	RL 083.1097	DRALORIC	SMA0207/4,75K-F-D	
R60	RN 9X3,3KOHM+-2%SIL10 H5 RESISTOR NETWORK	RN 340.2765	BOURNS	4310R-101-332	
R61	RN 9X3,3KOHM+-2%SIL10 H5 RESISTOR NETWORK	RN 340.2765	BOURNS	4310R-101-332	
R100	RL 0,35W 6,81KOHM+-1%TK50 RESISTOR	RL 082.2560	DRALORIC	SMA 0207/6,81K-F-C	
R101	RL 0,35W 6,81KOHM+-1%TK50 RESISTOR	RL 082.2560	DRALORIC	SMA 0207/6,81K-F-C	
R102	RL 0,35W 1KOHM+-1%TK50 RESISTOR	RL 082.2160	DRALORIC	SMA0207/1K-F-C	
R103	RL 0,35W30,1KOHM+-0,1%T25 RESISTOR	RL 084.3987	DRALORIC	SMA/207/30,1K-B-E	
R104	RL 0,35W 301 OHM+-1%TK50 RESISTOR	RL 083.0210	DRALORIC	SMA0207/301OHM-F-D	
R105	RL 0,35W 1,0 OHM+-1%TK50 METALFILMRESISTOR	RL 099.7860	RESISTA	MK2 1,00 OHM 1% TK50	
R106	RL 0,21W 820 OHM2% UNGEW. RESISTOR	RL 092.6069	RESISTA	MK1 820OHM 2% UNG.	
R107	RL 0,35W20,0KOHM+-0,1%T25 RESISTOR	RL 084.3641	DRALORIC	SMA0207/20,0K-B-E	
R108	RL 0,35W 453 OHM+-1%TK50 RESISTOR	RL 083.0378	DRALORIC	SMA0207/453OHM-F-D	
R109	RS 0,75W 1KOHM+-10%CERMET DEPOS.-CARBON POTENTIOMET	RS 037.7367	BOURNS	3006P-1-1 KOHM+-10%	
R110	RL 0,35W 7,68KOHM+-1%TK50 RESISTOR	RL 083.1200	DRALORIC	SMA0207/7,68K-F-D	
R111	RL 0,35W 681 OHM+-1%TK50 RESISTOR	RL 083.0490	DRALORIC	SMA0207/681OHM-F-D	
R112	RL 0,35W 3,32KOHM+-1%TK50 RESISTOR	RL 083.0990	DRALORIC	SMA0207/3,32K-F-D	
R113	RL 0,35W 10,0KOHM+-1%TK50 RESISTOR	RL 083.1297	DRALORIC	SMA0207/10K-F-D	
R114	RL 0,35W 10,0KOHM+-1%TK50 RESISTOR	RL 083.1297	DRALORIC	SMA0207/10K-F-D	
R202	RL 0,35W 1KOHM+-1%TK50 RESISTOR	RL 082.2160	DRALORIC	SMA0207/1K-F-C	
R203	RL 0,35W 1KOHM+-1%TK50 RESISTOR	RL 082.2160	DRALORIC	SMA0207/1K-F-C	
R204	RL 0,35W 15,0KOHM+-1%TK50 RESISTOR	RL 083.1400	DRALORIC	SMA0207/15K-F-D	
R205	RL 0,35W 162KOHM+-1%TK50 RESISTOR	RL 082.2154	DRALORIC	SMA0207/162K-F-C	
R206	RL 0,35W 162KOHM+-1%TK50 RESISTOR	RL 082.2154	DRALORIC	SMA0207/162K-F-C	
R207	RL 0,35W 221 OHM+-1%TK50 RESISTOR	RL 083.0084	DRALORIC	SMA0207/221OHM-F-D	
R208	RL 0,35W 221 OHM+-1%TK50 RESISTOR	RL 083.0084	DRALORIC	SMA0207/221OHM-F-D	
R300	RL 0,35W 121 OHM+-1%TK50 RESISTOR	RL 082.9859	DRALORIC	SMA0207/121OHM-F-D	
R301	RL 0,21W 33 OHM2% UNGEW. RESISTOR	RL 092.5891	RESISTA	MK1 33OHM 2% UNGEW.	
R302	RL 0,21W 22 OHM2% UNGEW. RESISTOR	RL 092.5879	RESISTA	MK1 22OHM 2% UNGEW.	
R305	RL 0,35W 1,82KOHM+-1%TK50 RESISTOR	RL 082.2277	DRALORIC	SMA0207/1,82K-F-C	
R306	RL 0,21W 1,0KOHM2% UNGEW. RESISTOR	RL 092.6075	RESISTA	MK1 1K 2% UNGEW.	
R307	RL 0,21W 10 OHM2% UNGEW. RESISTOR	RL 092.5833	RESISTA	MK1 10OHM 2% UNGEW.	
R308	RL 0,21W 390 OHM2% UNGEW. RESISTOR	RL 092.6023	RESISTA	MK1 390OHM 2% UNGEW.	
R309	RL 0,21W 56 OHM2% UNGEW. RESISTOR	RL 092.5927	RESISTA	MK1 56OHM 2% UNGEW.	
R310	RL 0,21W 100 OHM2% UNGEW. RESISTOR	RL 092.5956	RESISTA	MK1 100OHM 2% UNGEW.	

Kennz. Comp.No.	Benennung Designation	Sachnummer Stock No.	Hersteller Manufacturer	Bezeichnung Designation	enthalten in contained in
R320	RL 0,21W 390 OHM2% UNGEW. RESISTOR	RL 092.6023	RESISTA	MK1 390OHM 2% UNGEW.	
R321	RL 0,21W 390 OHM2% UNGEW. RESISTOR	RL 092.6023	RESISTA	MK1 390OHM 2% UNGEW.	
R322	RL 0,35W 4,75KOHM+-1%TK50 RESISTOR	RL 083.1097	DRALORIC	SMA0207/4,75K-F-D	
R323	RL 0,35W 3,57KOHM+-1%TK50 RESISTOR	RL 083.1022	DRALORIC	SMA0207/3,57K-F-D	
R325	RL 0,35W 4,75KOHM+-1%TK50 RESISTOR	RL 083.1097	DRALORIC	SMA0207/4,75K-F-D	
R326	RL 0,35W 332 OHM+-1%TK50 RESISTOR	RL 083.0255	DRALORIC	SMA0207/332OHM-F-D	
R327	RL 0,35W 4,75KOHM+-1%TK50 RESISTOR	RL 083.1097	DRALORIC	SMA0207/4,75K-F-D	
R328	RL 0,21W 68 OHM2% UNGEW. RESISTOR	RL 092.5933	RESISTA	MK1 68OHM 2% UNGEW.	
R331	RL 0,35W 8,25KOHM+-1%TK50 RESISTOR	RL 083.1239	DRALORIC	SMA0207/8,25K-F-D	
R332	RL 0,35W1,62KOHM+-0,1%T25 RESISTOR	RL 083.9546	DRALORIC	0207 1,62KOHM 0,1%	
R333	RL 0,35W 68,1KOHM+-1%TK50 RESISTOR	RL 082.2602	DRALORIC	SMA 0207/68,1K-F-C	
R340	RL 0,35W9,09KOHM+-0,1%T25 RESISTOR	RL 084.2980	DRALORIC	SMA0207/9,09K-B-E	
R341	RL 0,35W 1KOHM+-1%TK50 RESISTOR	RL 082.2160	DRALORIC	SMA0207/1K-F-C	
R342	RL 0,35W 1KOHM+-1%TK50 RESISTOR	RL 082.2160	DRALORIC	SMA0207/1K-F-C	
R343	RL 0,35W 1KOHM+-1%TK50 RESISTOR	RL 082.2160	DRALORIC	SMA0207/1K-F-C	
R344	RL 0,35W 1KOHM+-1%TK50 RESISTOR	RL 082.2160	DRALORIC	SMA0207/1K-F-C	
R350	RL 0,35W 1KOHM+-1%TK50 RESISTOR	RL 082.2160	DRALORIC	SMA0207/1K-F-C	
R351	RL 0,35W 681 OHM+-1%TK50 RESISTOR	RL 083.0490	DRALORIC	SMA0207/681OHM-F-D	
R352	RL 0,21W 100 OHM2% UNGEW. RESISTOR	RL 092.5956	RESISTA	MK1 100OHM 2% UNGEW.	
R360	RN 4X 10KOHM+-2%SIL 8 H5 RESISTOR NETWORK	RN 291.5154	BOURNS	4308R-102-103	
R370	RN 4X 10KOHM+-2%SIL 8 H5 RESISTOR NETWORK	RN 291.5154	BOURNS	4308R-102-103	
R380	RN 4X 10KOHM+-2%SIL 8 H5 RESISTOR NETWORK	RN 291.5154	BOURNS	4308R-102-103	
V2	AD 1N4448 75V 0,15A UDI DIODE	AD 012.0700	TEXAS INST	1N4448 GEGURTET	
V3	AE 5082-2800 SCHOTTKYDI DIODE	AE 012.9066	HEWLETT-P.	5082-2800	
V4	AD 1N4448 75V 0,15A UDI DIODE	AD 012.0700	TEXAS INST	1N4448 GEGURTET	
V5	AD 1N4448 75V 0,15A UDI DIODE	AD 012.0700	TEXAS INST	1N4448 GEGURTET	
V6	AD 1N4448 75V 0,15A UDI DIODE	AD 012.0700	TEXAS INST	1N4448 GEGURTET	
V10	AE 1N938 9,0V REF.DI REFERENCE DIODE	AE 012.4806	THOMSON	1N938	
V11	AD 1N4448 75V 0,15A UDI DIODE	AD 012.0700	TEXAS INST	1N4448 GEGURTET	
V12	AD 1N4448 75V 0,15A UDI DIODE	AD 012.0700	TEXAS INST	1N4448 GEGURTET	
V13	AD 1N4448 75V 0,15A UDI DIODE	AD 012.0700	TEXAS INST	1N4448 GEGURTET	
V14	AD 1N4448 75V 0,15A UDI DIODE	AD 012.0700	TEXAS INST	1N4448 GEGURTET	
V15	AK 2N4029 PNP 80V1000MA TRANSISTOR	083.7150	VALVO	2N4029	
V16	AK BC517 NPN 30V DARL. TRANSISTOR	AK 282.2133	SIEMENS	BC517	
V17	AD 1N4448 75V 0,15A UDI DIODE	AD 012.0700	TEXAS INST	1N4448 GEGURTET	
V18	AD 1N4448 75V 0,15A UDI DIODE	AD 012.0700	TEXAS INST	1N4448 GEGURTET	
V19	AD 1N4448 75V 0,15A UDI DIODE	AD 012.0700	TEXAS INST	1N4448 GEGURTET	
V20	AK BC253C PNP 25V 100MA TRANSISTOR	010.2829	INTERMETAL	BC253C	

Kennz. Comp.No.	Benennung Designation	Sachnummer Stock No.	Hersteller Manufacturer	Bezeichnung Designation	enthalten in contained in
V21	AD 1N4448 75V 0,15A UDI DIODE	AD 012.0700	TEXAS INST	1N4448 GEGURTET	
V30	AD 1N4448 75V 0,15A UDI DIODE	AD 012.0700	TEXAS INST	1N4448 GEGURTET	
V31	AD 1N4448 75V 0,15A UDI DIODE	AD 012.0700	TEXAS INST	1N4448 GEGURTET	
V100	AE 5082-2800 SCHOTTKYDI DIODE	AE 012.9066	HEWLETT-P.	5082-2800	
V202	AE 5082-2800 SCHOTTKYDI DIODE	AE 012.9066	HEWLETT-P.	5082-2800	
V203	AE 5082-2800 SCHOTTKYDI DIODE	AE 012.9066	HEWLETT-P.	5082-2800	
V205	AE BZX79/C8V2 0,5W Z-DI ZENER DIODE	AE 012.2490	VALVO	BZX79/C8V2	
V206	AE BZX79/C3V3 0,5W Z-DI ZENER DIODE	AE 012.2390	ITT	ZPD3,3	
V207	AE BZX79/C4V3 0,5W Z-DI ZENER DIODE	AE 012.2426	VALVO	BZX79/C4V3	
V208	AE BZX79/C4V3 0,5W Z-DI ZENER DIODE	AE 012.2426	VALVO	BZX79/C4V3	
V210	AE BZX79/C10 0;5W Z-DI ZENER DIODE	AE 012.2510	VALVO	BZX79/C10	
V211	AE BZX79/C10 0,5W Z-DI ZENER DIODE	AE 012.2510	VALVO	BZX79/C10	
V300 ..305	AE BA483 BER.SCH.DIOD.UHF DIODE	AE 568.2290	VALVO	BA483	
V306	AE BA483 BER.SCH.DIOD.UHF DIODE	AE 568.2290	VALVO	BA483	
V307	AE BZX79/B5V6 0,5W Z-DI ZENER DIODE	AE 012.5254	VALVO	BZX79/B5V6	
V308	AK BC173C NPN 25V 100MA TRANSISTOR	010.4444	INTERMETAL	BC173C	
V309	AK BFX48 PNP 30V 100MA TRANSISTOR	AK 010.3202	SGS	BFX48	
V314	AE 5082-2800 SCHOTTKYDI DIODE	AE 012.9066	HEWLETT-P.	5082-2800	
V315	AK BFR15A NPN 12V 30MA TRANSISTOR	AK 451.4320	SIEMENS	BFR15A	
V325	AE BA483 BER.SCH.DIOD.UHF DIODE	AE 568.2290	VALVO	BA483	
V326	AE BA483 BER.SCH.DIOD.UHF DIODE	AE 568.2290	VALVO	BA483	
V327	AE BA483 BER.SCH.DIOD.UHF DIODE	AE 568.2290	VALVO	BA483	
V360	AD 1N4448 75V 0,15A UDI DIODE	AD 012.0700	TEXAS INST	1N4448 GEGURTET	
V361	AK BC253C PNP 25V 100MA TRANSISTOR	010.2829	INTERMETAL	BC253C	
V362	AE BZX79/C4V7 0,5W Z-DI ZENER DIODE	AE 012.2432	VALVO	BZX79/C4V7	
V371	AK BC253C PNP 25V 100MA TRANSISTOR	010.2829	INTERMETAL	BC253C	
V372	AE BZX79/C4V7 0,5W Z-DI ZENER DIODE	AE 012.2432	VALVO	BZX79/C4V7	
V381	AK BC253C PNP 25V 100MA TRANSISTOR	010.2829	INTERMETAL	BC253C	
V382	AE BZX79/C4V7 0,5W Z-DI ZENER DIODE	AE 012.2432	VALVO	BZX79/C4V7	
W1	DX KABEL CABLE	802.5113			
X1	FP STECKERL.INDIR.64POLIG 64-PIN INSERT	FP 084.6470	PANDUIT	100-064-033/999	
X20	VL WIRE-WRAP PIN 3-POLIG/3 PINS WIRE-WRAP PIN	VL 088.4542	BERG	NR. 75 403-003	
X21	VL WIRE-WRAP PIN 3-POLIG/3 PINS WIRE-WRAP PIN	VL 088.4542	BERG	NR. 75 403-003	
X24	FP INDIREKT.STECKERL.36P. 5-POLIG/5 PINS PIN CONNECTOR	FP 242.3600	BERG	75160-102-36	
X25	VL WIRE-WRAP PIN 2-POLIG/2 PINS WIRE-WRAP PIN	VL 088.4542	BERG	NR. 75 403-003	
X26	VL WIRE-WRAP PIN	VL 088.4542	BERG	NR. 75 403-003	

Kennz. Comp.No.	Benennung Designation	Sachnummer Stock No.	Hersteller Manufacturer	Bezeichnung Designation	enthalten in contained in
	2-POLIG/2 PINS WIRE-WRAP PIN				
X27	VL WIRE-WRAP PIN 3-POLIG/3 PINS WIRE-WRAP PIN	VL 088.4542	BERG	NR. 75 403-003	
X28	VL WIRE-WRAP PIN 2-POLIG/2 PINS WIRE-WRAP PIN	VL 088.4542	BERG	NR. 75 403-003	
X29	VL WIRE-WRAP PIN 2-POLIG/2 PINS WIRE-WRAP PIN	VL 088.4542	BERG	NR. 75 403-003	
X30	VL WIRE-WRAP PIN 2-POLIG/2 PINS WIRE-WRAP PIN	VL 088.4542	BERG	NR. 75 403-003	
X71	FP IND.BUCHSENLEISTE 64P. FEMALE MULTIPOINT CONNECT	FP 278.1913	PANDUIT	100-064-433/999	
X72	FP IND.BUCHSENLEISTE 64P. FEMALE MULTIPOINT CONNECT	FP 278.1913	PANDUIT	100-064-433/999	
X73	FR IC-FASSUNG 20POL.DIL SOCKET	FR 092.7142	PRECICONT	US020T	
X74	FR IC-FASSUNG 20POL.DIL SOCKET	FR 092.7142	PRECICONT	US020T	
X75	VL WIRE-WRAP PIN 2-POLIG/2 PINS WIRE-WRAP PIN	VL 088.4542	BERG	NR. 75 403-003	
X701	FJ EINBAUSTECKER SYST.SMB ANGLE CONNECTOR	FJ 602.8804	ROSENBERG	R&S-ZCHNG.602.8804	
X710	FJ EINBAUSTECKER SYST.SMB ANGLE CONNECTOR	FJ 602.8804	ROSENBERG	R&S-ZCHNG.602.8804	
					- ENDE -

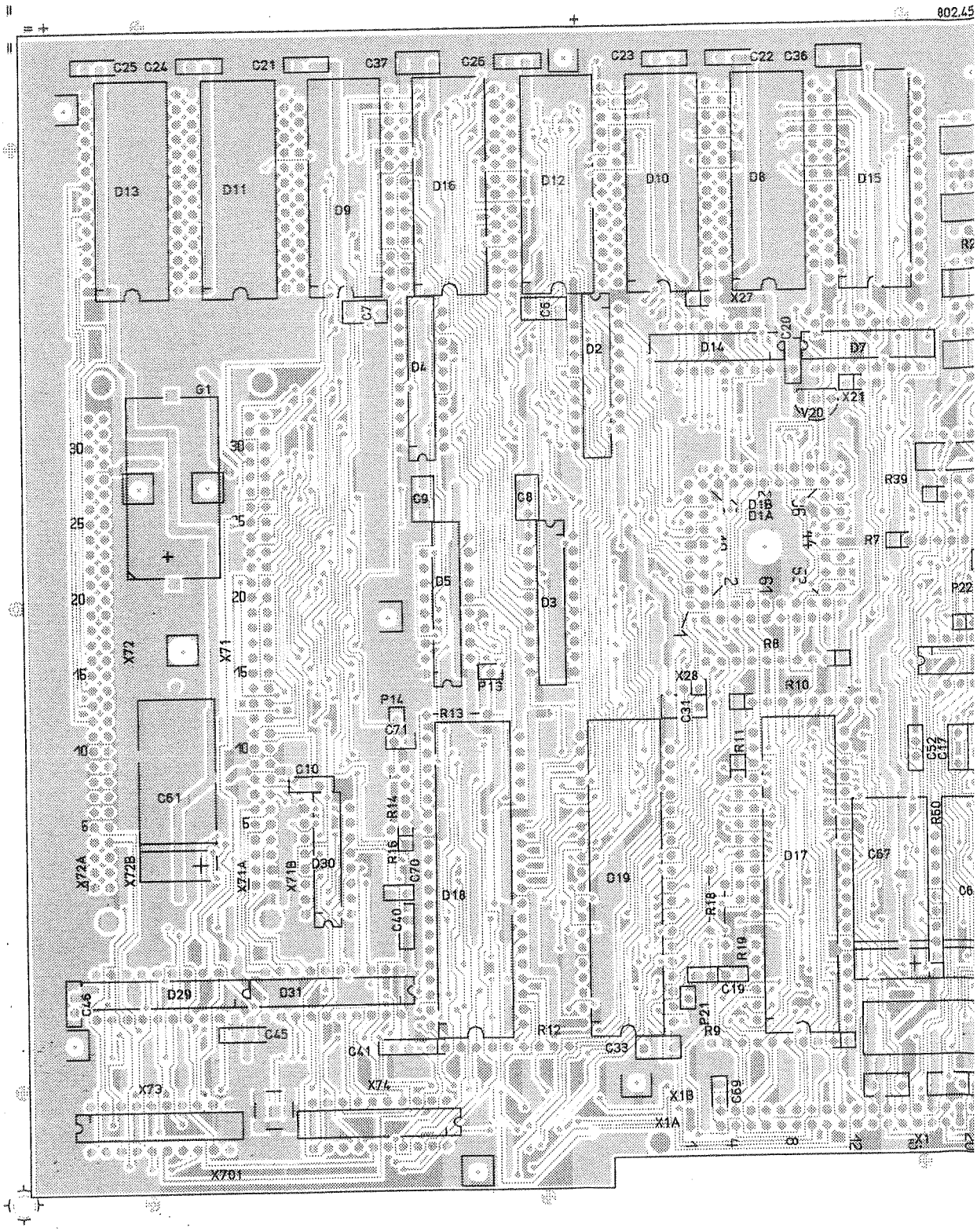

Ansicht und Leitungsführung Lötseite
View of tracks on solder side

(hierzu HVC 250)

ACHTUNG: EGB!
Elektrostatisch gefährde
Bauelemente erfordern
besondere Handhabung.

ATTENTION ESD!
Electrostatic sensitive
devices require a specia
handling.

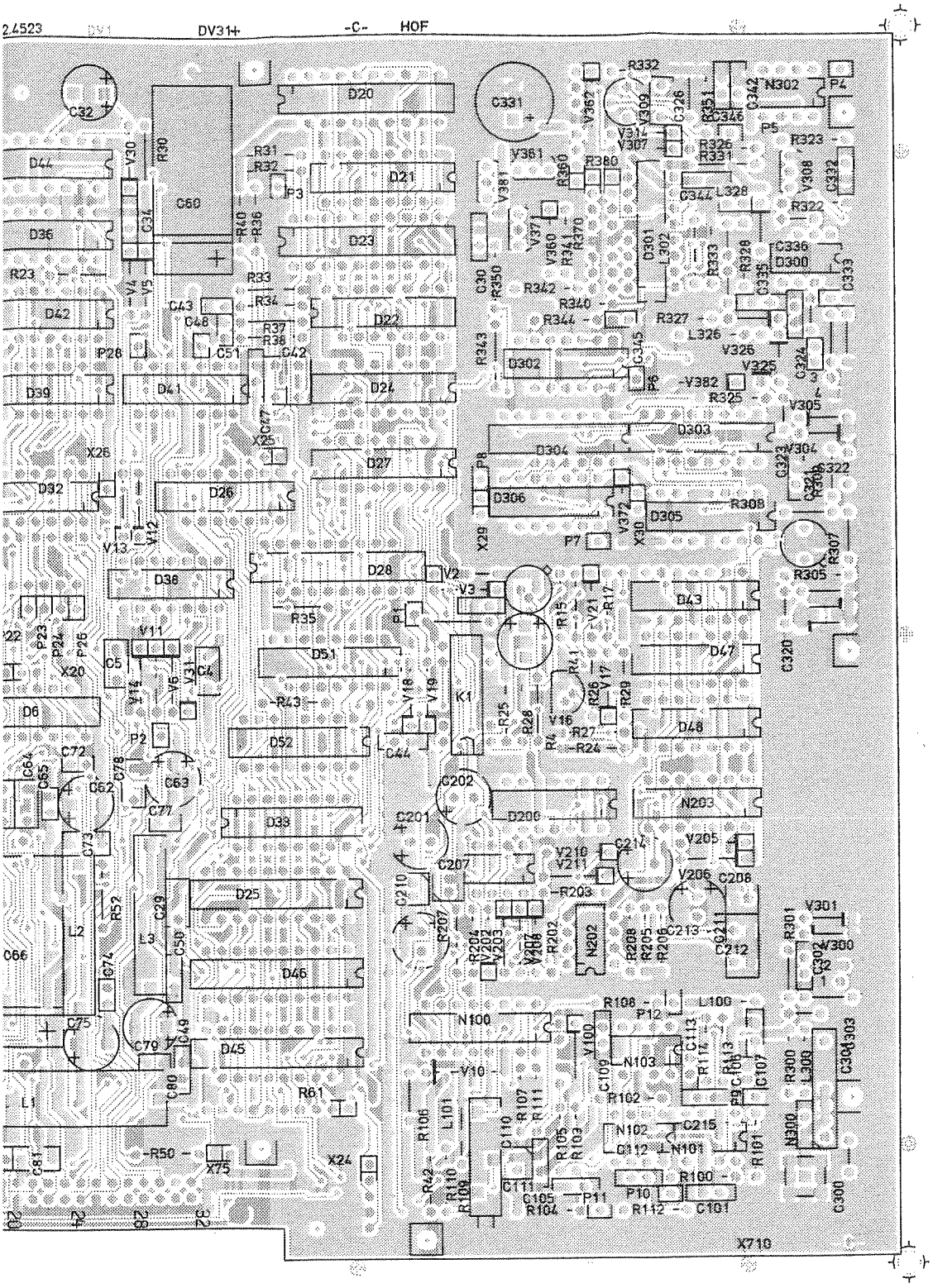

VARIANTENERKLÄRUNG/VERSION
VAR 02 – GRUNDAUSFÜHRUNG/BASIC MODEL

H	35533	09.86	HO	Maße ohne Toleranzangabe	Maßstab 1 : 1	
					Halbzeug, Werkstoff	
				1KSA / Tag / Name	Benennung	
				Bearb. 09.86 HO	DIGITALTEIL	Z
				Gepr.	DIGITALSECTION	
				Norm		
				ROHDE&SCHWARZ	Zeichn.-Nr. 802.4517.01 EE	Blatt-Nr. 3 v. Bl.
Änd. Zust.	Änderungs-Mitteilung	Tag	Name	zu Gerät CMT	reg. i. V. 802.2014 V	erste Z.

07 6001 81

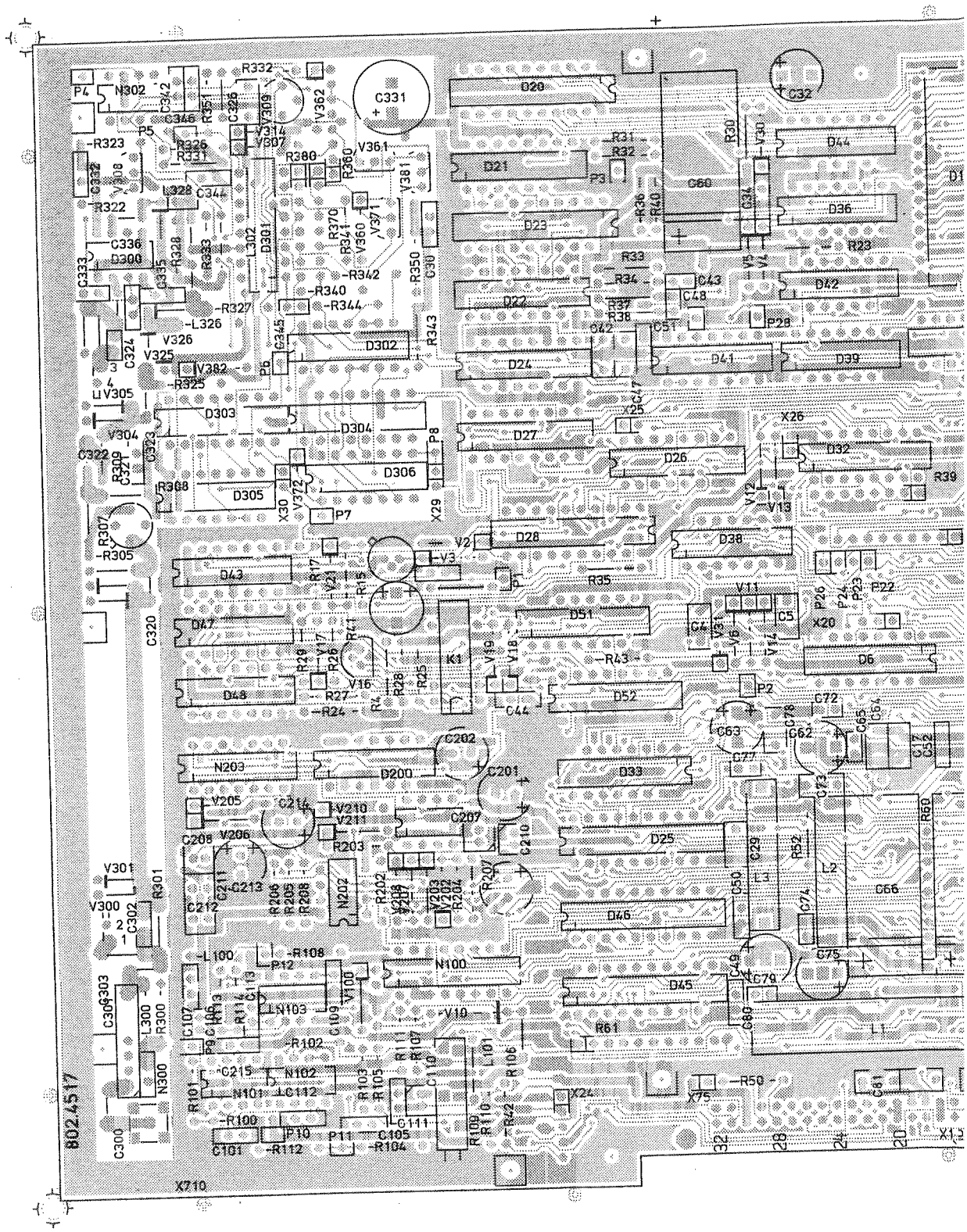

Ansicht und Leitungsführung. Bauteilseite
View of tracks on component side

(hierzu HVC 250)

ACHTUNG. EGB!
Elektrostatisch gefährde
Bauelemente erfordern
besondere Handhabung.

ATTENTION ESD!
Electrostatic sensitive
devices require a specia
handling.

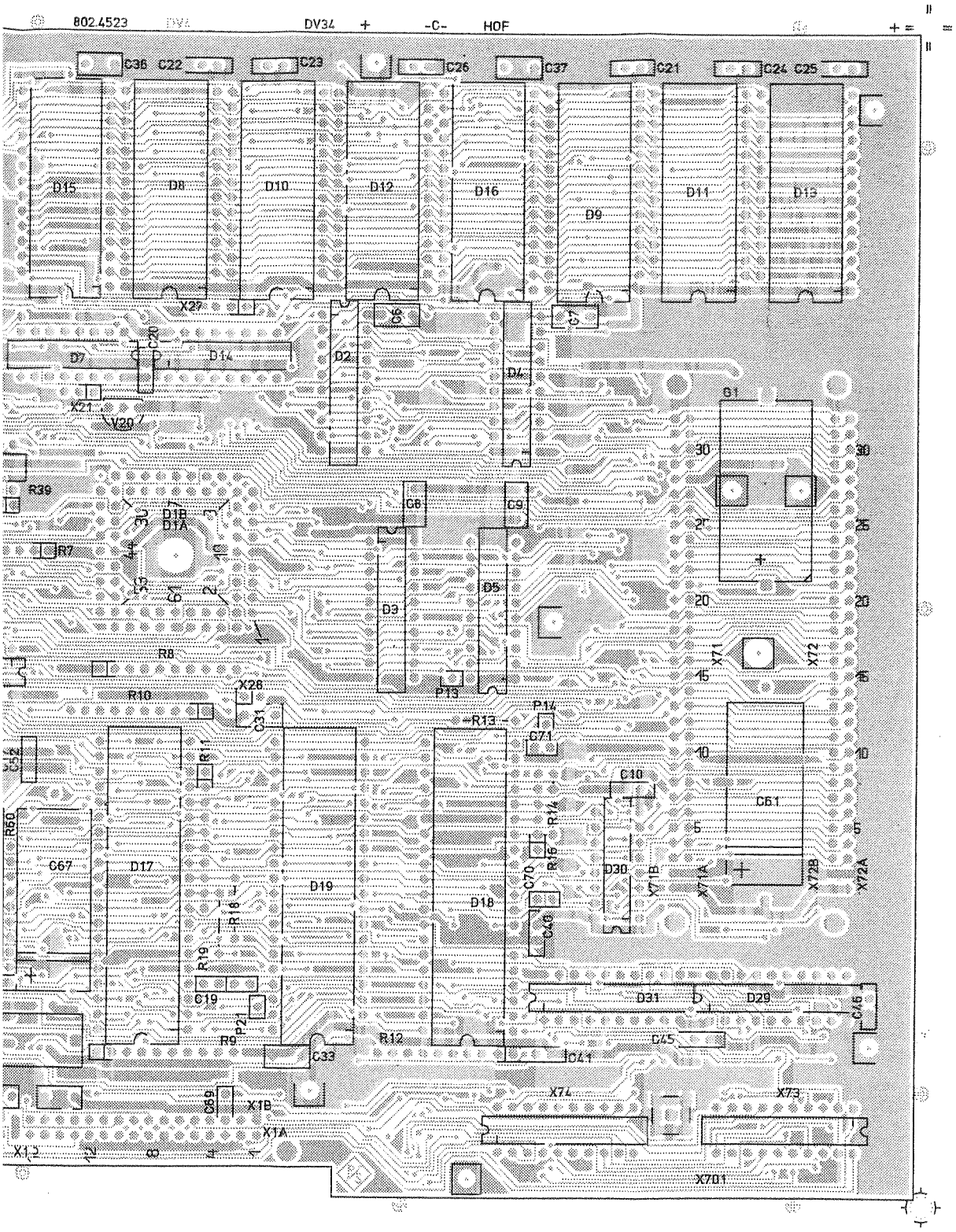

VARIANTENERKLÄRUNG/VERSION
VAR 02 – GRUNDAUSFÜHRUNG/BASIC MODEL

H	35533	09.86	HO	Maße ohne Toleranzangabe	Maßstab 1 : 1	
					Halbzeug, Werkstoff	
				1KSA / Tag / Name	Benennung	
				Bearb. 09.86 HO	DIGITALTEIL	Z
				Gepr.	DIGITALSECTION	
				Norm		
Änd. Zust.	Änderungs-Mitteilung	Tag	Name	ROHDE&SCHWARZ	Zeichn.-Nr. 802.4517.01	EE
				zu Gerät CMT	reg. i. V. 802.2014 V	erste Z.

Blatt-Nr. 2 v. Bl.

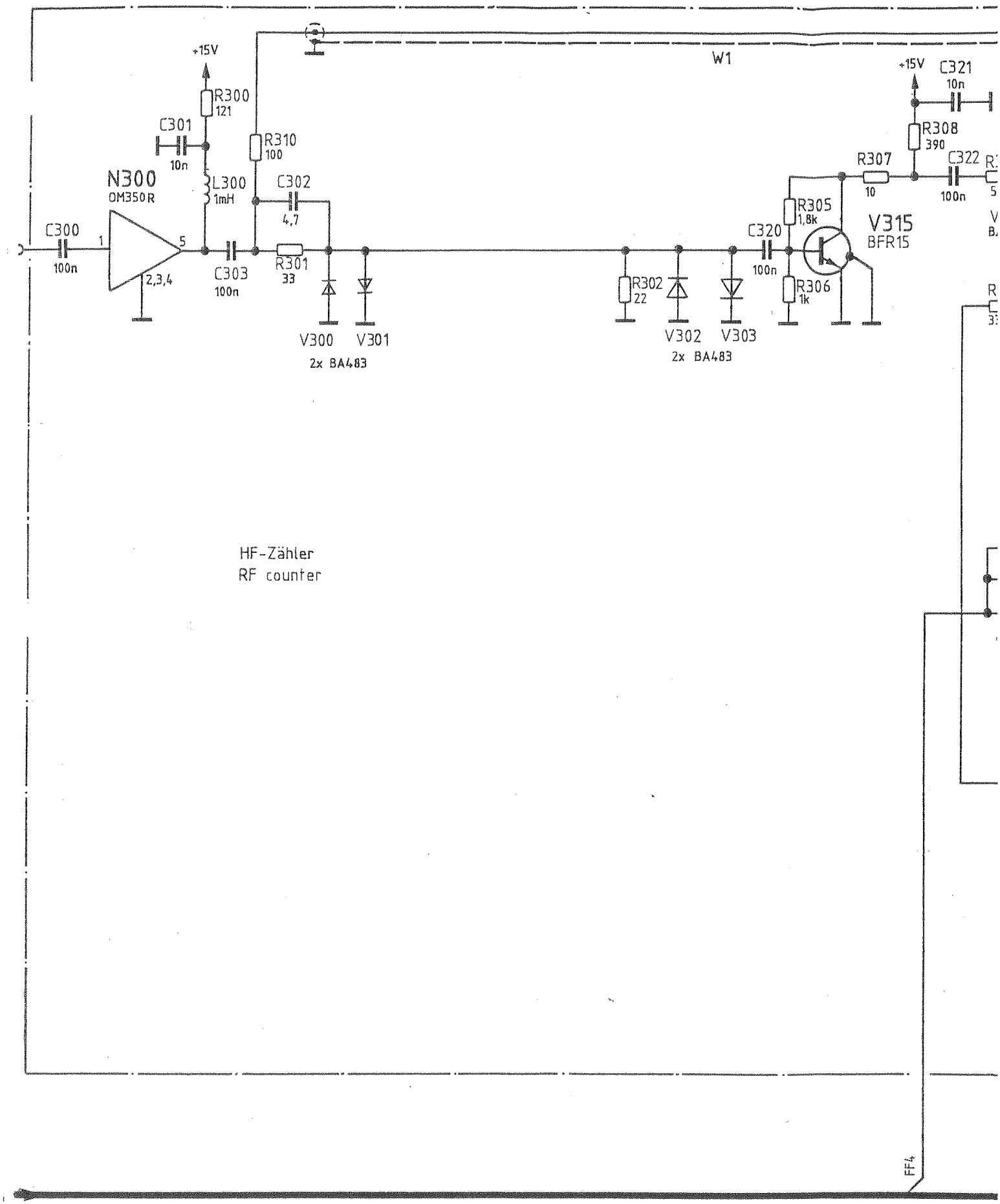
+15V
R300
121
C301
10n
N300
OM350R
L300
1mH
R310
100
C302
4,7
C300
100n
1
5
2,3,4
C303
100n
R301
33
V300
V301
2x BA483
W1
R302
22
V302
V303
2x BA483
C320
100n
R305
1,8k
R306
1k
V315
BFR15
R307
10
+15V
C321
10n
R308
390
C322
100n
HF-Zähler
RF counter
FF4

1 2 3 4

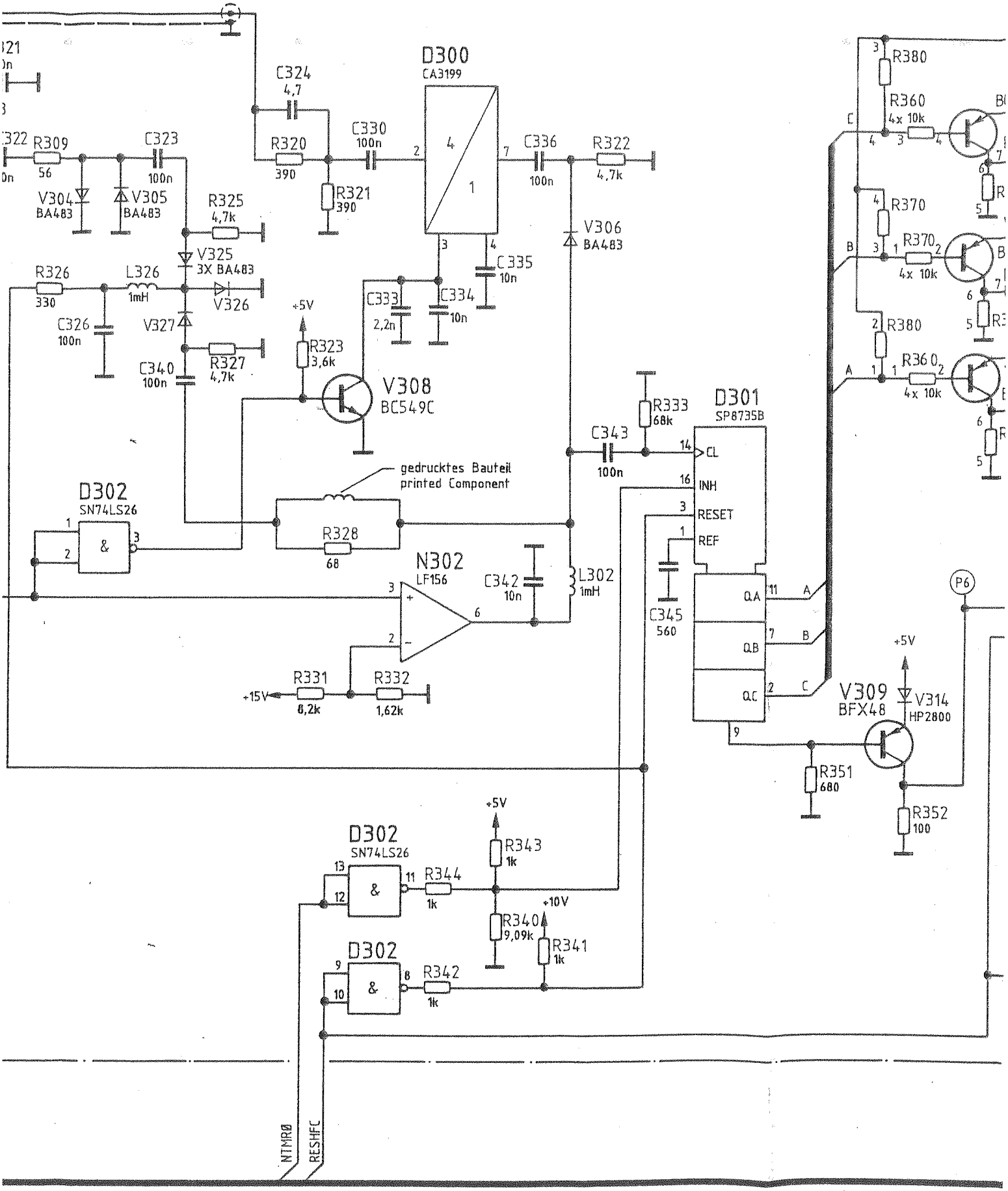
D300
CA3199
C324
4,7
R320
390
C330
100n
R321
390
C336
100n
R322
4,7k
R309
56
C323
100n
V304
BA483
V305
BA483
R325
4,7k
V325
3X BA483
R326
330
L326
1mH
V326
C326
100n
V327
R327
4,7k
C340
100n
+5V
R323
3,6k
V308
BC549C
C333
2,2n
C334
10n
C335
10n
V306
BA483
R333
68k
C343
100n
D301
SP8735B
CL
INH
RESET
REF
C345
560
Q.A
Q.B
Q.C
D302
SN74LS26
gedrucktes Bauteil
printed Component
R328
68
N302
LF156
C342
10n
L302
1mH
R331
8,2k
R332
1,62k
+15V
R380
R360
4x 10k
R370
R370
4x 10k
R380
R360
4x 10k
P6
+5V
V309
BFX48
V314
HP2800
R351
680
R352
100
D302
SN74LS26
R343
1k
R344
1k
+10V
R340
9,09k
R341
1k
D302
R342
1k
NTMR0
RESHFC

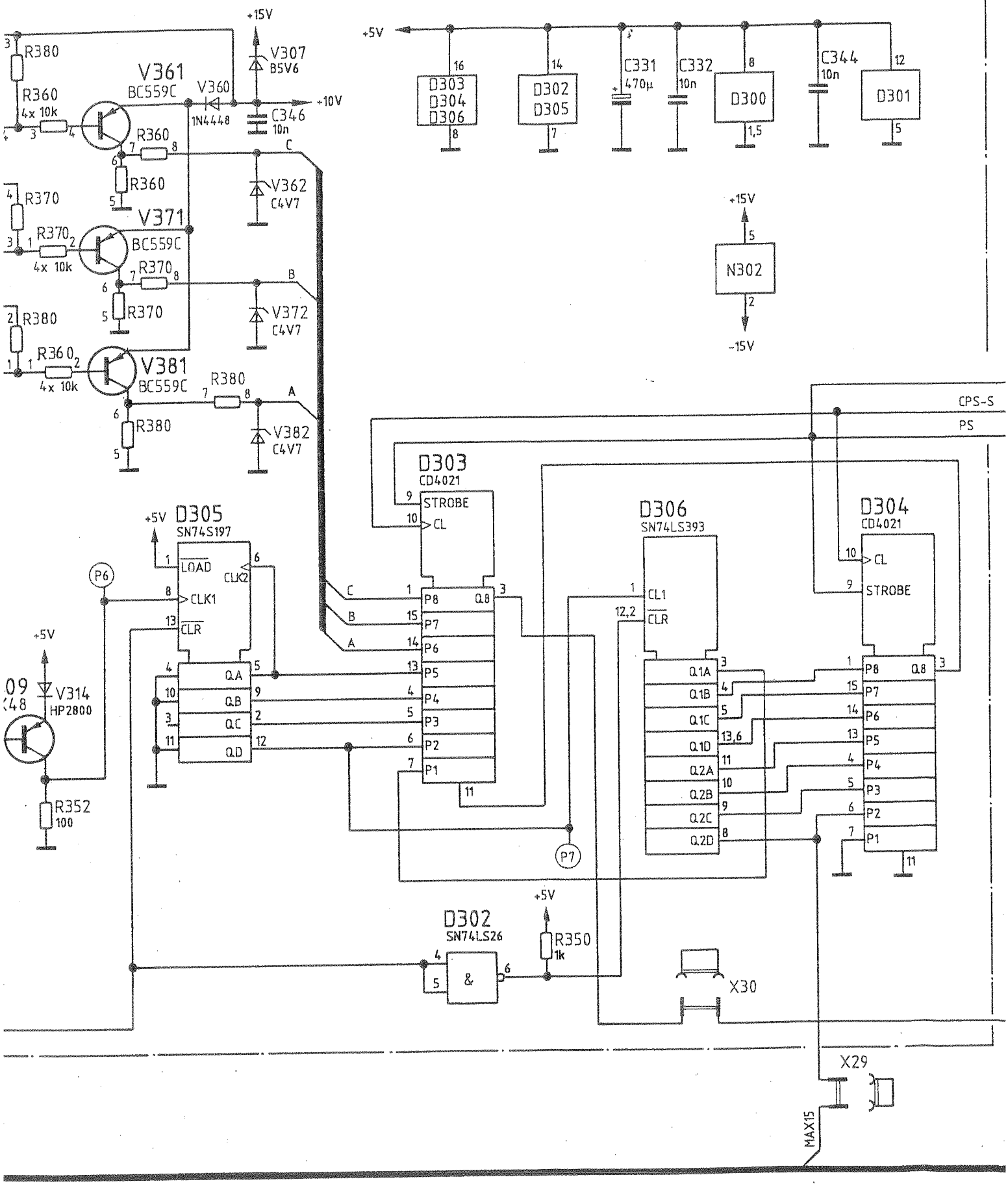
8
10
11
+15V
V307
B5V6
+10V
C346
10n
V360
1N4448
V361
BC559C
R380
R360
4x 10k
R360
R360
V362
C4V7
R370
V371
BC559C
R370
4x 10k
R370
R370
V372
C4V7
R380
R360
V381
BC559C
4x 10k
R380
R380
V382
C4V7
+5V
D303
D304
D306
D302
D305
C331
470µ
C332
10n
D300
C344
10n
D301
N302
-15V
CPS-S
PS
D303
CD4021
STROBE
CL
D305
SN74S197
LOAD
CLK1
CLR
CLK2
Q.A
Q.B
Q.C
Q.D
P6
P7
V314
HP2800
R352
100
D306
SN74LS393
CL1
CLR
Q.1A
Q.1B
Q.1C
Q.1D
Q.2A
Q.2B
Q.2C
Q.2D
D304
CD4021
D302
SN74LS26
R350
1k
X30
X29
MAX15

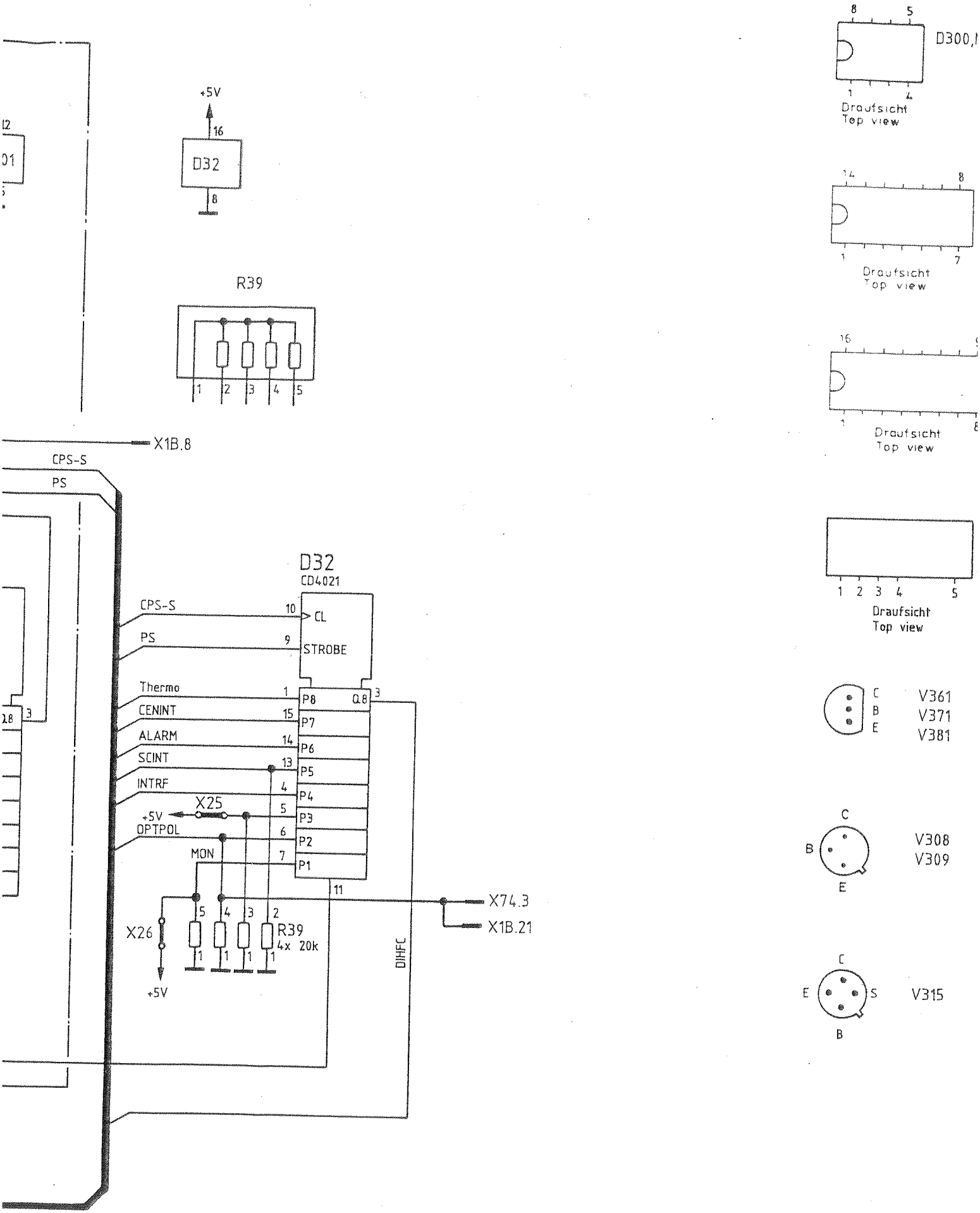

Stromlauf zu Digitalteil / Digital section		Z	Zeichn.-Nr. 802.4517
CMT	reg. i. V. 802.2020 V	erste Z. 802.2020	

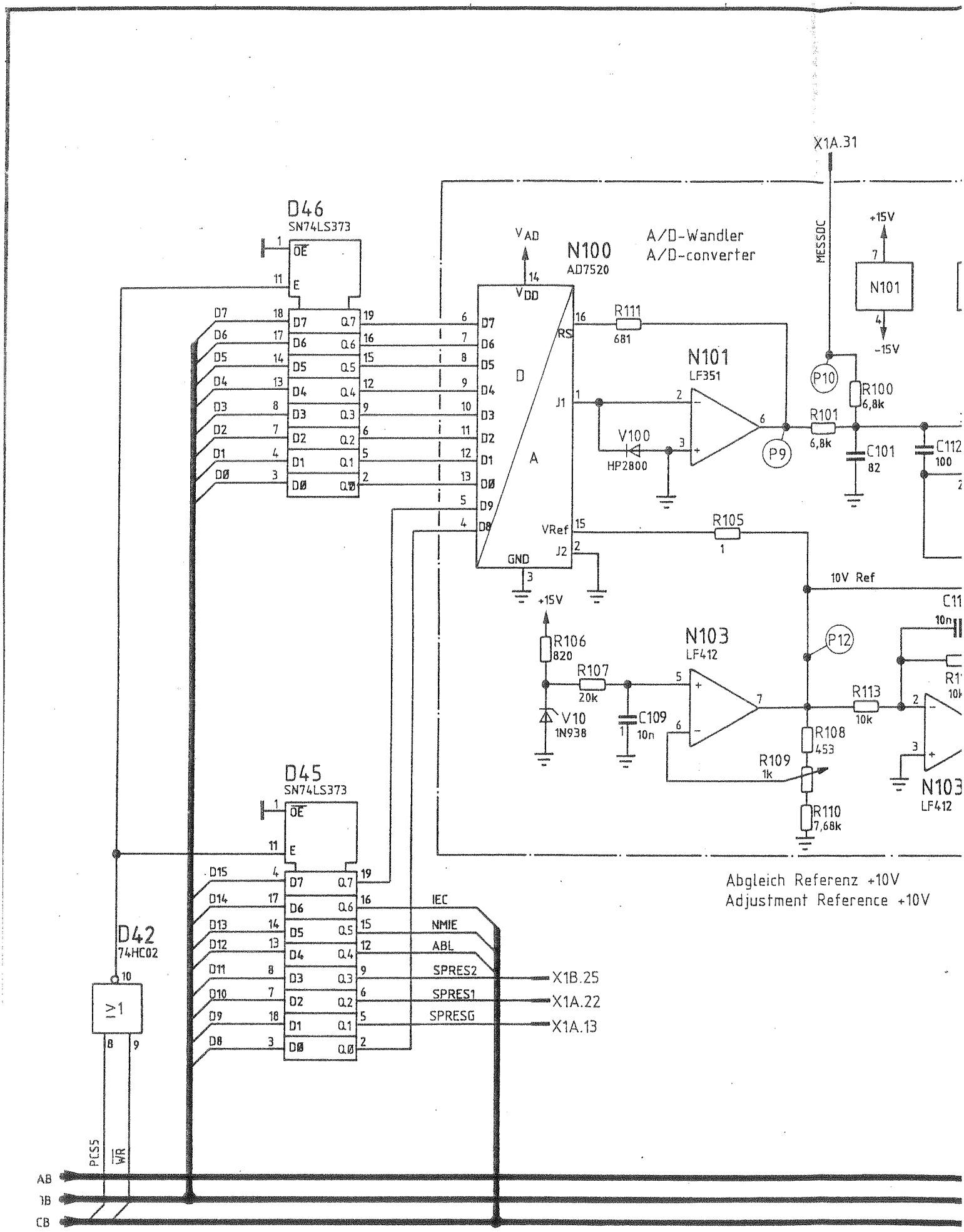
D46
SN74LS373
OE
E
D7
D6
D5
D4
D3
D2
D1
DØ
Q7
Q6
Q5
Q4
Q3
Q2
Q1
QØ
VAD
VDD
N100
AD7520
A/D-Wandler
A/D-converter
D
A
RS
J1
J2
VRef
GND
R111
681
N101
LF351
V100
HP2800
R101
6,8k
R100
6,8k
C101
82
C112
100
P10
P9
MESSDC
X1A.31
+15V
-15V
N101
R105
1
10V Ref
R106
820
R107
20k
V10
1N938
C109
10n
N103
LF412
P12
R113
10k
R108
453
R109
1k
R110
7,68k
N103
LF412
Abgleich Referenz +10V
Adjustment Reference +10V
D45
SN74LS373
D15
D14
D13
D12
D11
D10
D9
D8
IEC
NMIE
ABL
SPRES2
SPRES1
SPRESG
X1B.25
X1A.22
X1A.13
D42
74HC02
PCS5
WR
AB
DB
CB

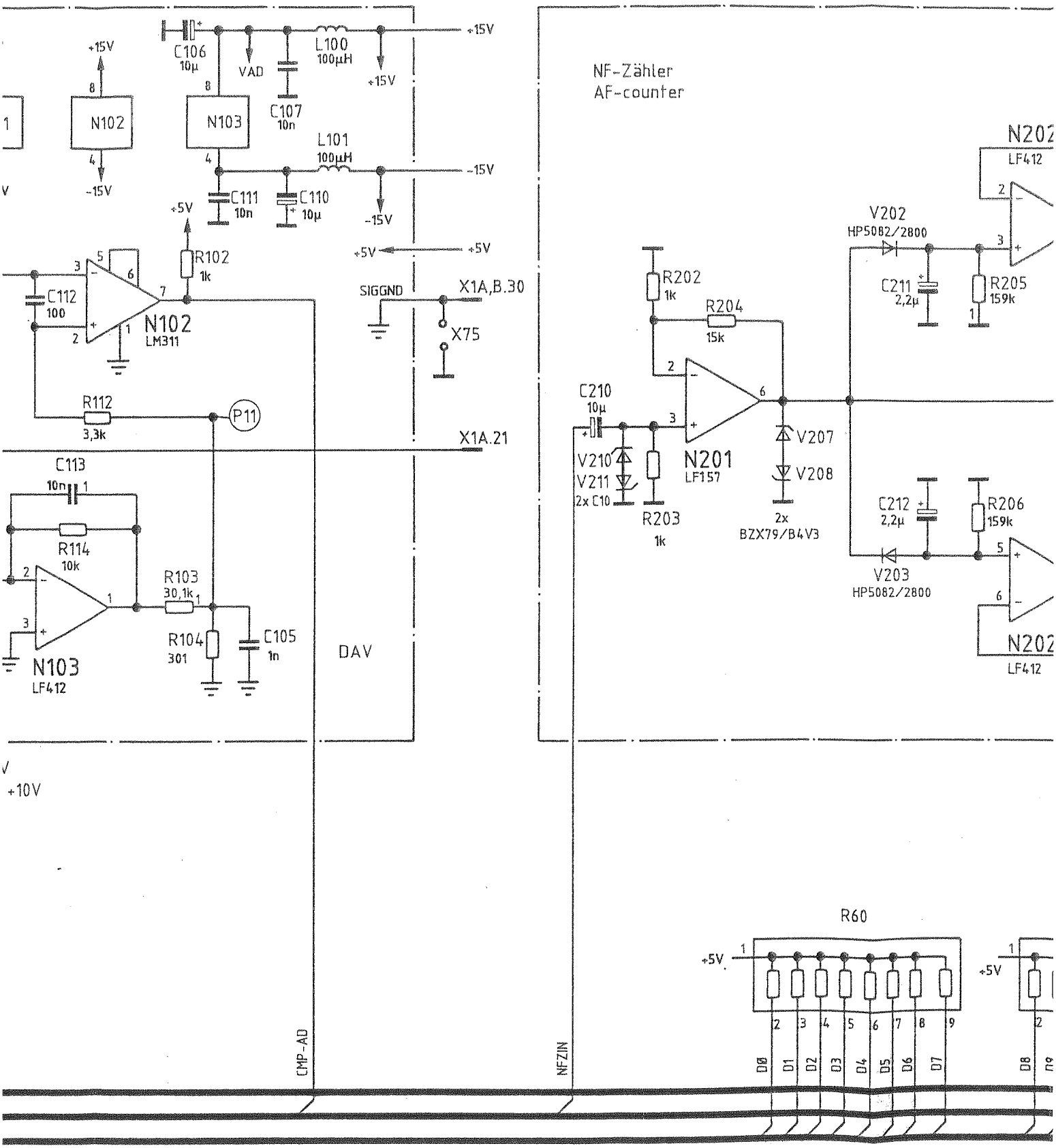
NF-Zähler
AF-counter
+15V
-15V
C106
10µ
VAD
C107
10n
L100
100µH
L101
100µH
N102
N103
C111
10n
C110
10µ
+5V
R102
1k
C112
100
N102
LM311
SIGGND
X1A,B.30
X75
R112
3,3k
P11
X1A.21
C113
10n
R114
10k
R103
30,1k
R104
301
C105
1n
N103
LF412
DAV
CMP-AD
NFZIN
R202
1k
R204
15k
C210
10µ
V210
V211
2x C10
R203
1k
N201
LF157
V207
V208
2x
BZX79/B4V3
V202
HP5082/2800
C211
2,2µ
R205
159k
C212
2,2µ
R206
159k
V203
HP5082/2800
N202
LF412
R60
D0
D1
D2
D3
D4
D5
D6
D7
D8

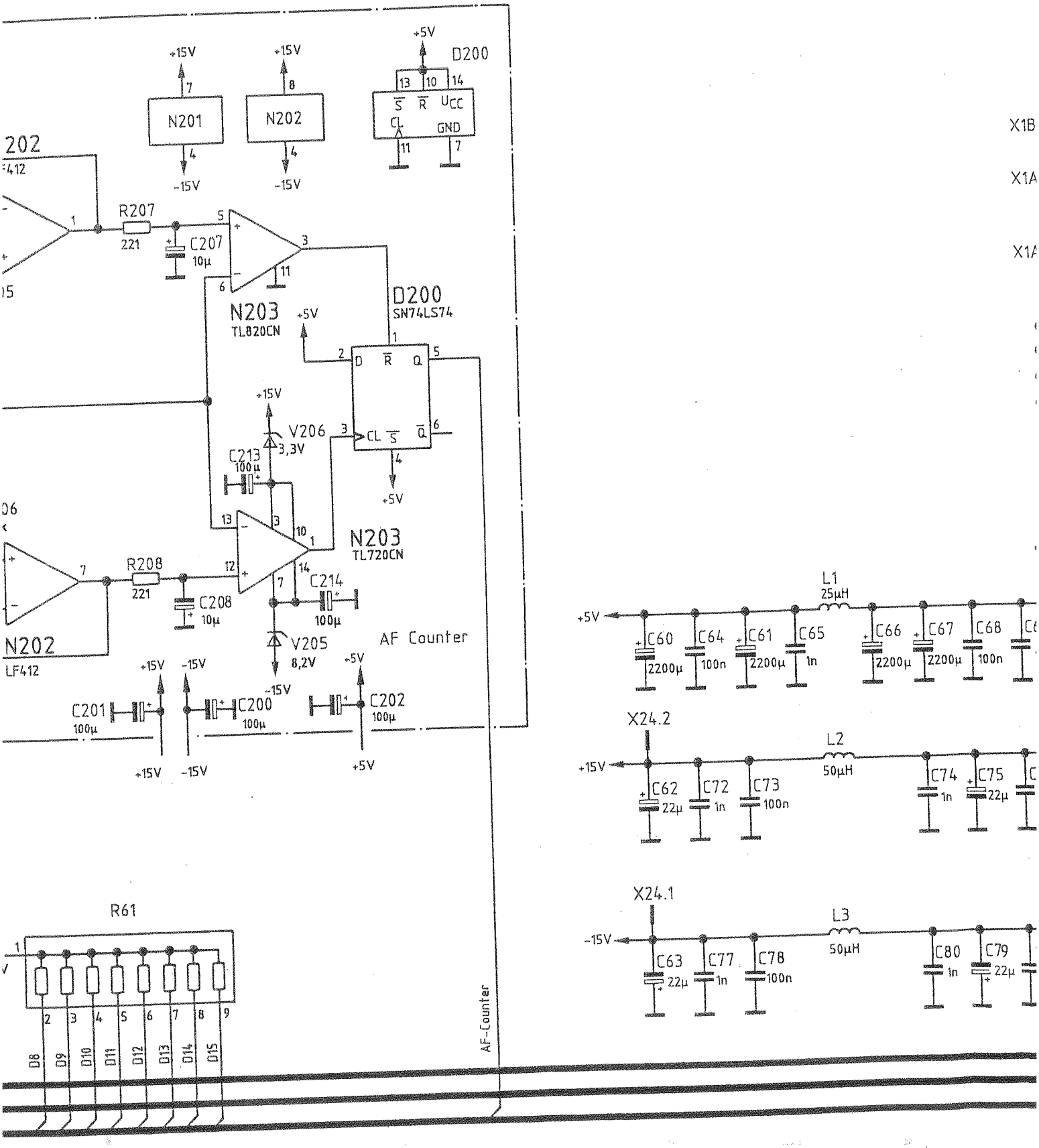

Klebekante für Druckerzeugnis, durch diese Zone möglichst nur Leitungen führen.

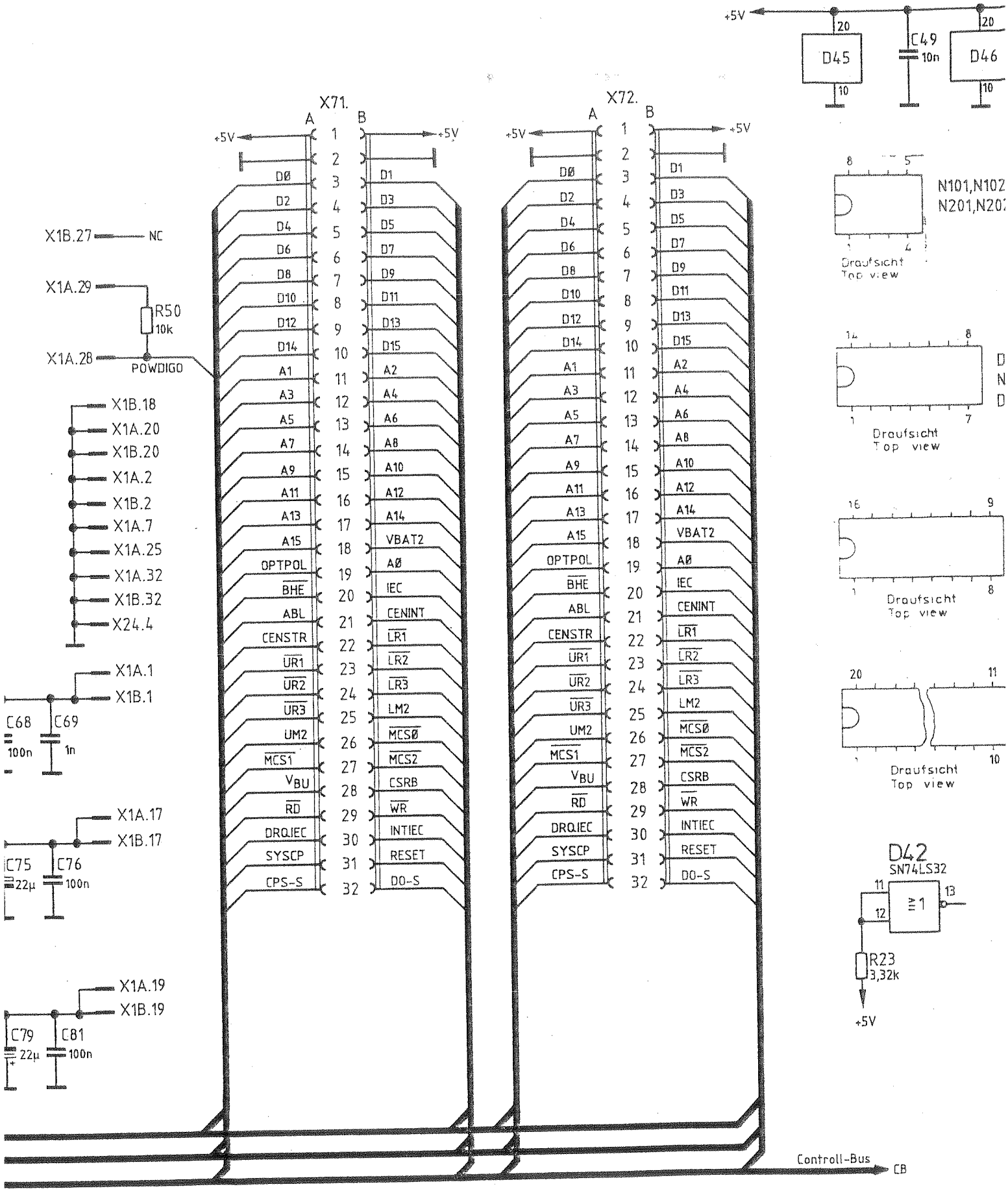

Stromlauf zu	Digitalteil/ Digital section	Z	Zeichn.-Nr. 802.4517
CMT	reg. i. V. 802.2020 V	erste Z. 802.2020	

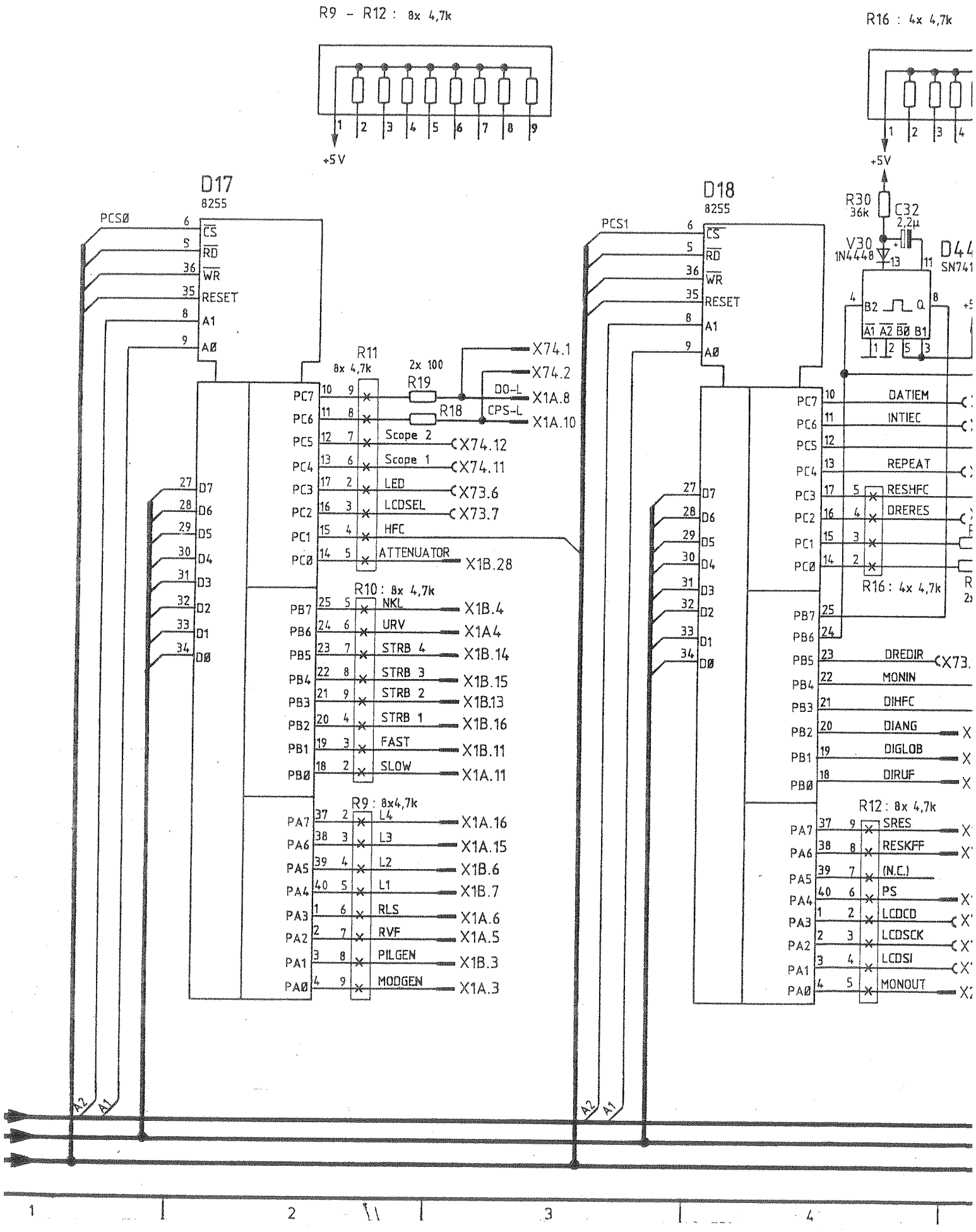
R9 - R12 : 8x 4,7k
+5V
R16 : 4x 4,7k
D17
8255
PCS0
CS
RD
WR
RESET
A1
A0
D7
D6
D5
D4
D3
D2
D1
D0
R11
8x 4,7k
2x 100
R19
R18
X74.1
X74.2
DO-L
CPS-L
X1A.8
X1A.10
PC7
PC6
PC5
PC4
PC3
PC2
PC1
PC0
Scope 2
Scope 1
LED
LCDSEL
HFC
ATTENUATOR
X74.12
X74.11
X73.6
X73.7
X1B.28
R10 : 8x 4,7k
PB7
PB6
PB5
PB4
PB3
PB2
PB1
PB0
NKL
URV
STRB 4
STRB 3
STRB 2
STRB 1
FAST
SLOW
X1B.4
X1A4
X1B.14
X1B.15
X1B.13
X1B.16
X1B.11
X1A.11
R9 : 8x4,7k
PA7
PA6
PA5
PA4
PA3
PA2
PA1
PA0
L4
L3
L2
L1
RLS
RVF
PILGEN
MODGEN
X1A.16
X1A.15
X1B.6
X1B.7
X1A.6
X1A.5
X1B.3
X1A.3
D18
8255
PCS1
R30
36k
C32
2,2µ
V30
1N4448
D44
SN741
B2
Q
A1 A2 B0 B1
DATIEM
INTIEC
REPEAT
RESHFC
DRERES
R16 : 4x 4,7k
DREDIR
MONIN
DIHFC
DIANG
DIGLOB
DIRUF
R12 : 8x 4,7k
SRES
RESKFF
(N.C.)
PS
LCDCD
LCDSCK
LCDSI
MONOUT
A2
A1
1
2
3
4

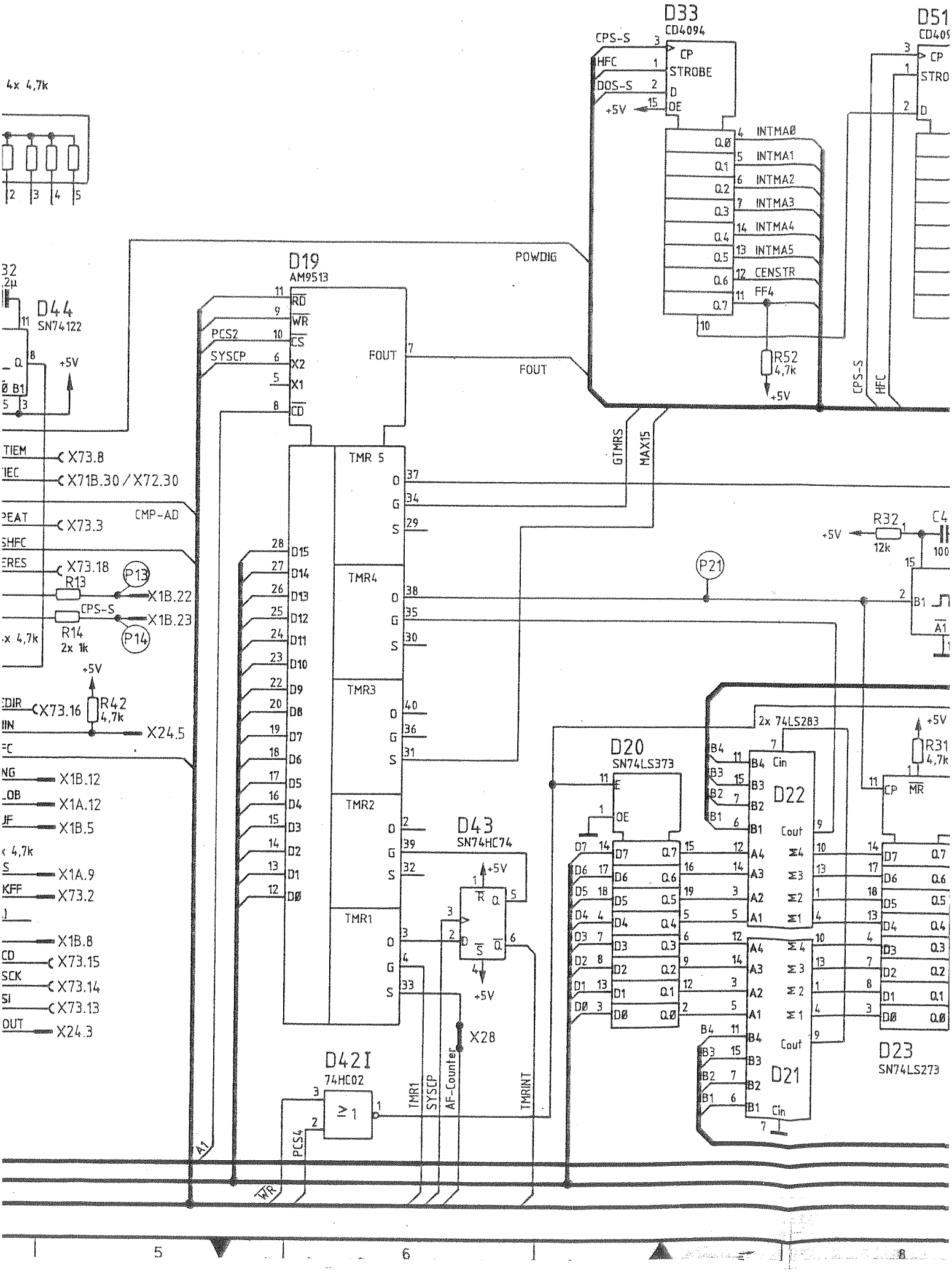
D33
CD4094
CPS-S
HFC
DOS-S
+5V
CP
STROBE
D
OE
INTMA0
INTMA1
INTMA2
INTMA3
INTMA4
INTMA5
CENSTR
FF4
R52
4,7k
D51
CD409
CP
STRO
D
CPS-S
HFC
4x 4,7k
D44
SN74122
+5V
POWDIG
D19
AM9513
RD
WR
CS
X2
X1
CD
PCS2
SYSCP
FOUT
FOUT
TMR 5
TMR4
TMR3
TMR2
TMR1
D15
D14
D13
D12
D11
D10
D9
D8
D7
D6
D5
D4
D3
D2
D1
D0
GTMRS
MAX15
TIEM
X73.8
X71B.30 / X72.30
CMP-AD
X73.3
X73.18
R13
P13
X1B.22
CPS-S
X1B.23
R14
2x 1k
P14
X73.16
R42
4,7k
X24.5
X1B.12
X1A.12
X1B.5
X1A.9
X73.2
X1B.8
X73.15
X73.14
X73.13
X24.3
R32
12k
P21
2x 74LS283
D20
SN74LS373
D22
D21
D23
SN74LS273
R31
4,7k
MR
D43
SN74HC74
X28
D42I
74HC02
TMR1
SYSCP
AF-Counter
TMRINT
PCS4
A1
WR

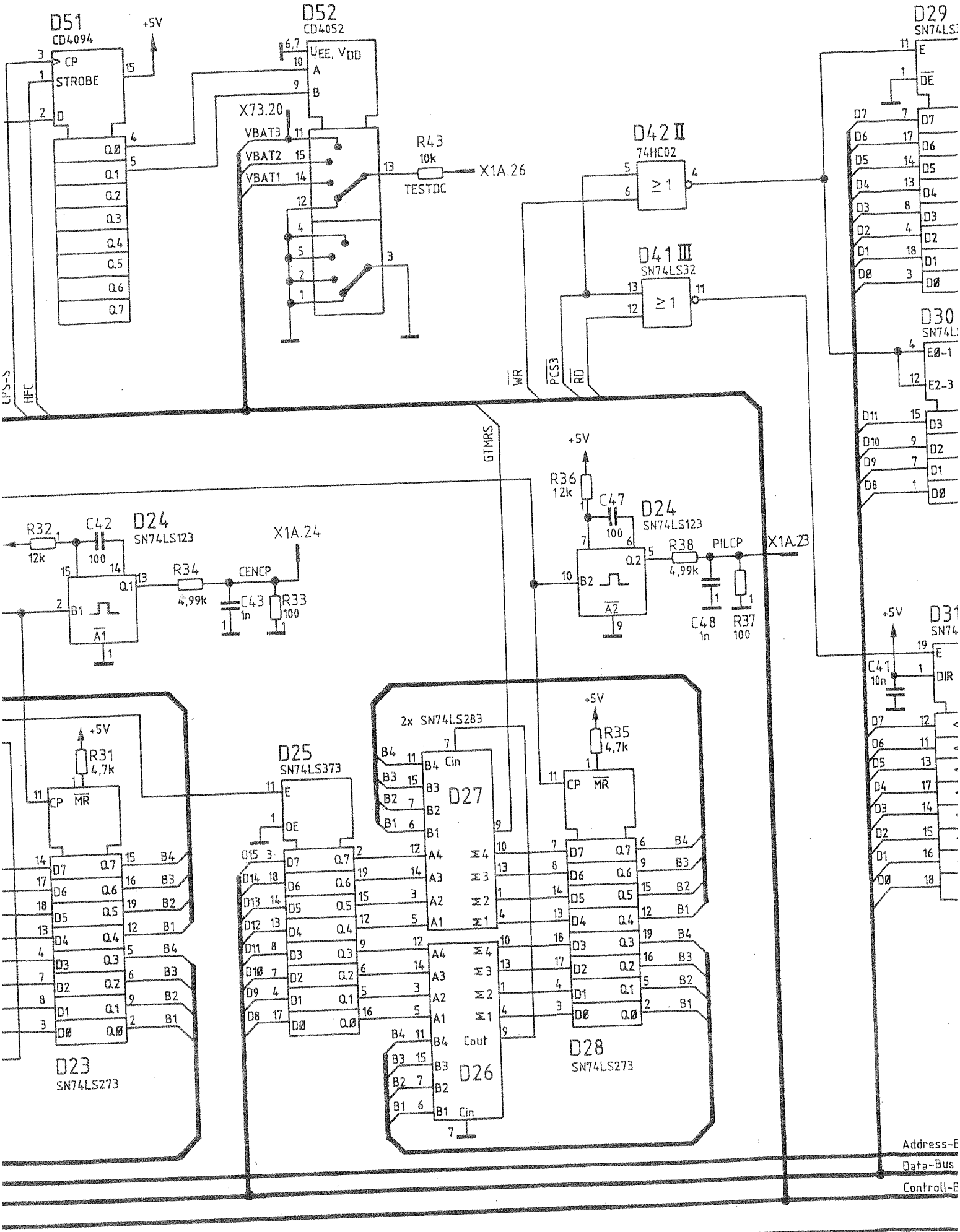

Klebekante für Druckerzeugnis · durch diese Zone möglichst nur Leitungen führen.

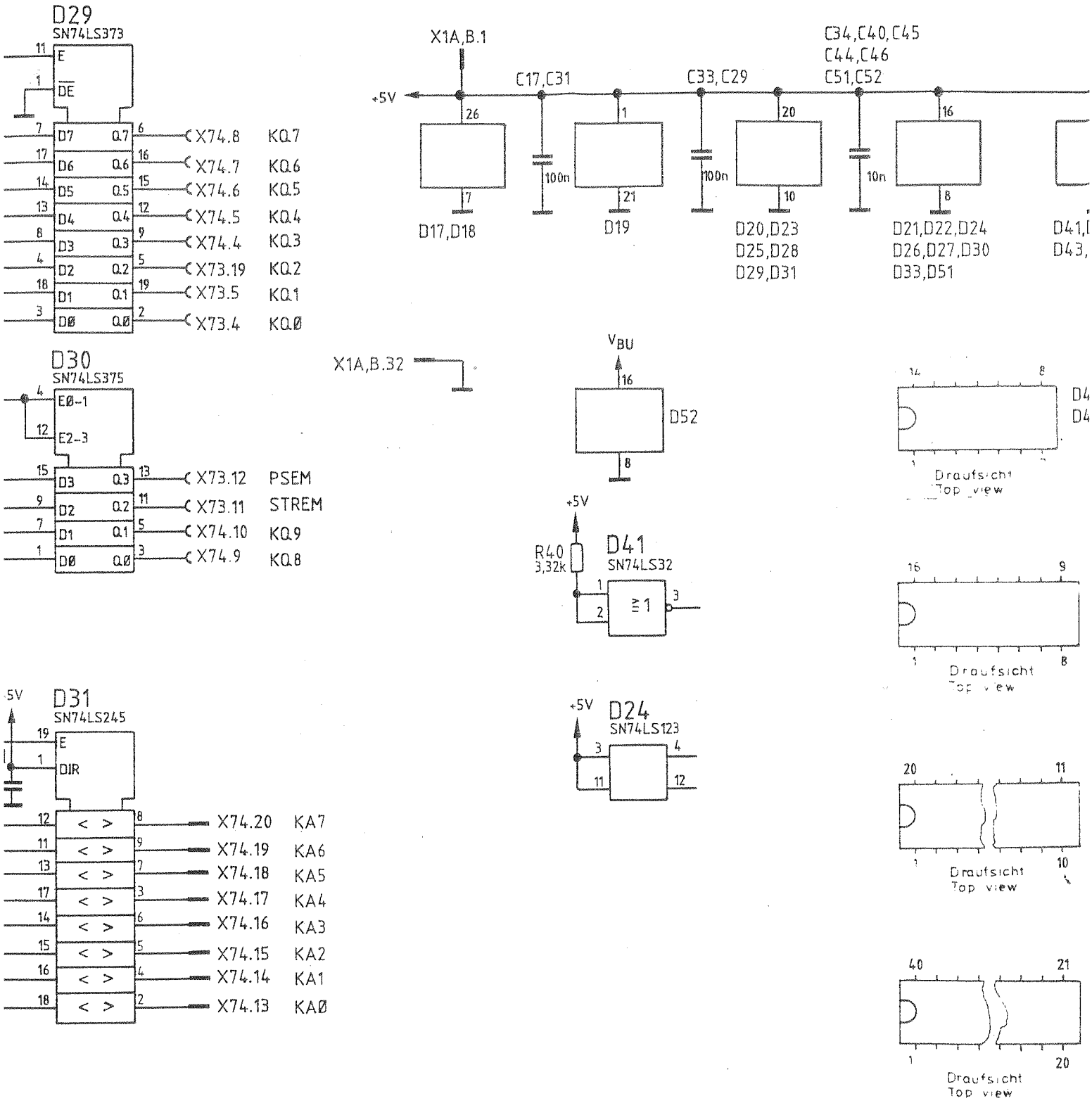

Address-Bus → AB
Data-Bus → DB
Controll-Bus → CB

Stromlauf zu
CMT Digitalteil / Digital section

Z

Zeichn.-Nr. 802.451

CMT | reg. i. V. 802.2020 V | erste Z. _____

12 13 14

PF 095 415-0480

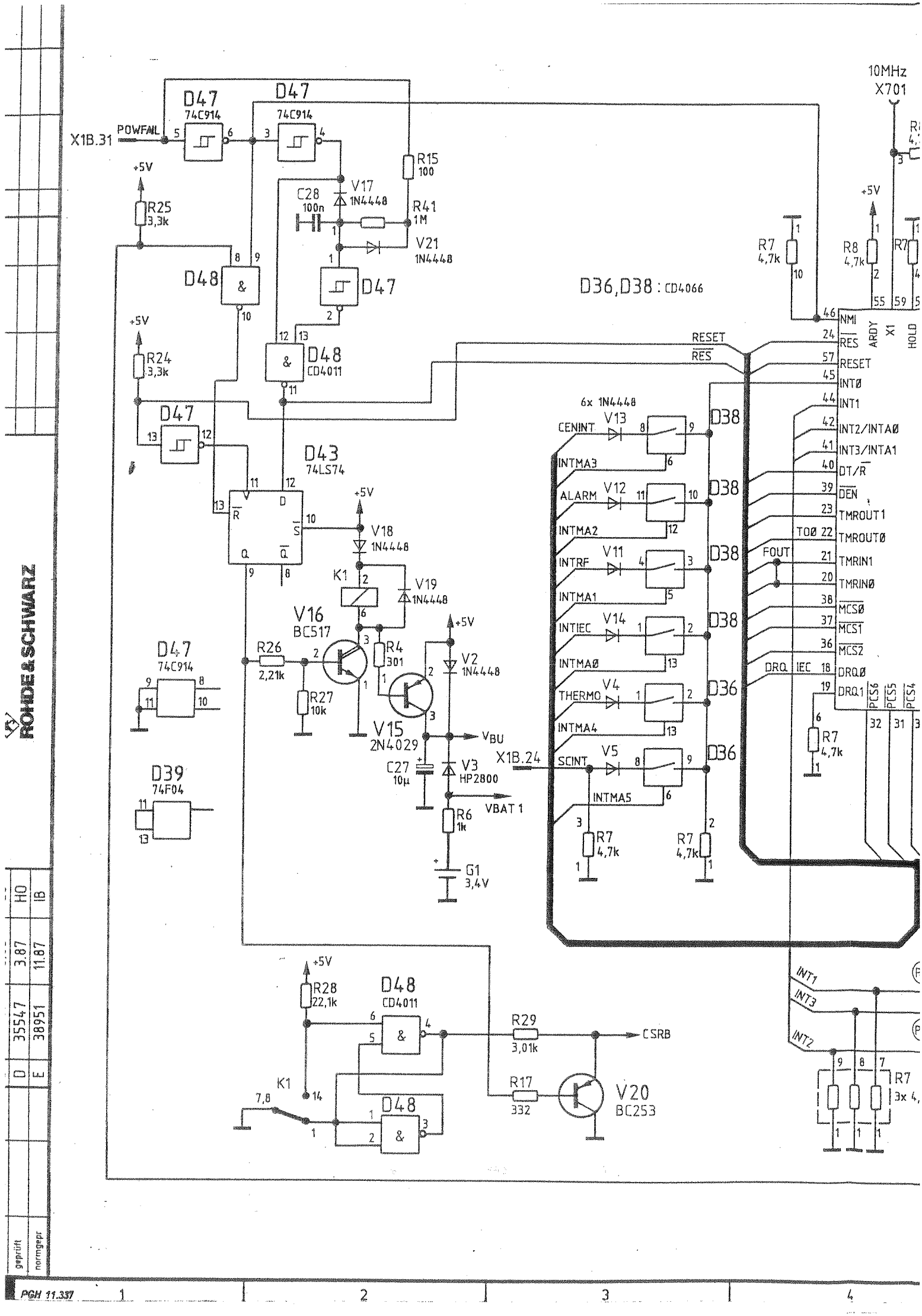

ROHDE & SCHWARZ

D	35547	3.87	HO
E	38951	11.87	IB

geprüft

normgepr

PGH 11.337

1 2 3 4

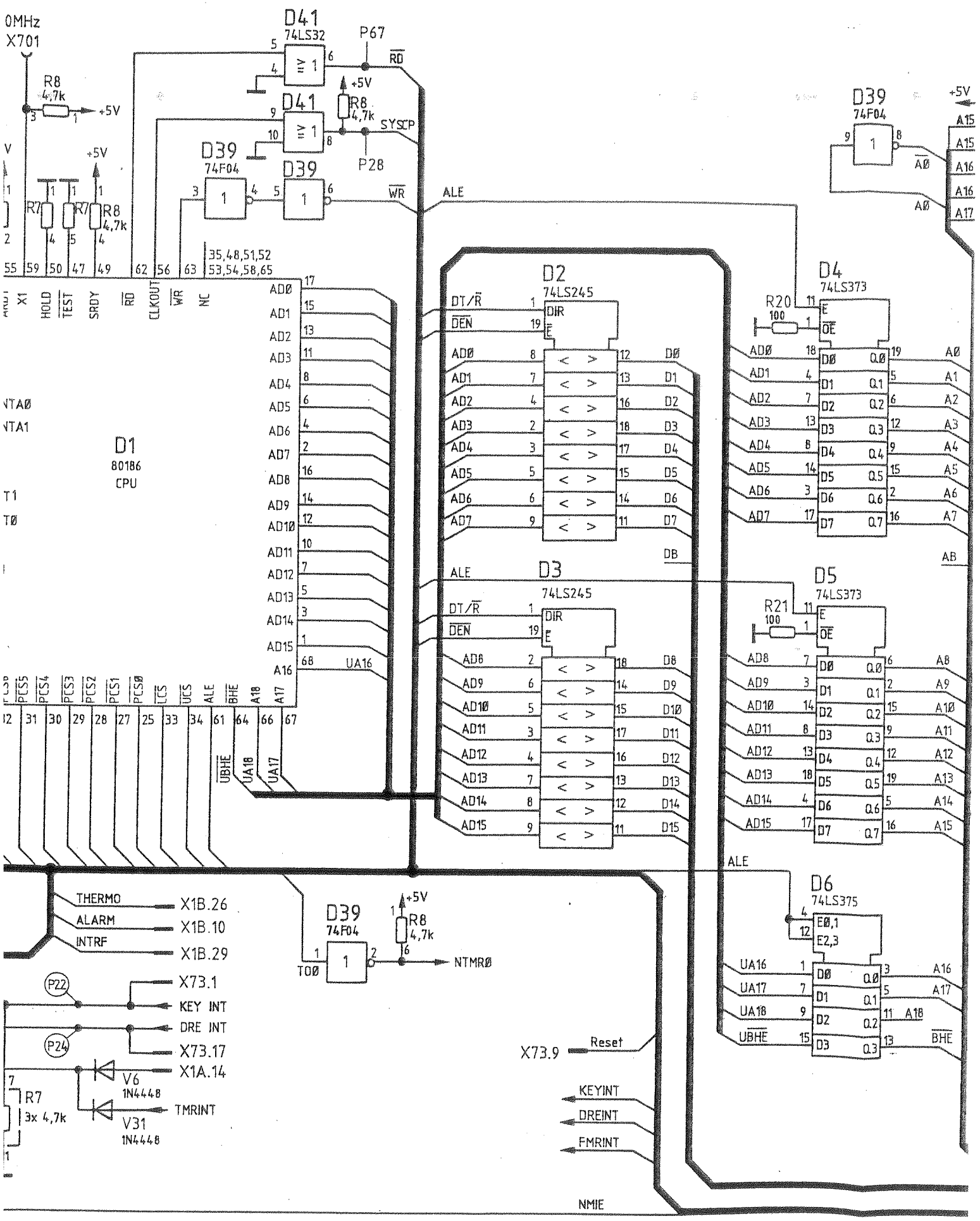
0MHz
X701
R8
4,7k
+5V
D41
74LS32
P67
RD
D41
SYSCP
P28
D39
74F04
WR
ALE
R7
R8
4,7k
35,48,51,52
53,54,58,65
X1
HOLD
TEST
SRDY
RD
CLKOUT
WR
NC
D1
80186
CPU
AD0
AD1
AD2
AD3
AD4
AD5
AD6
AD7
AD8
AD9
AD10
AD11
AD12
AD13
AD14
AD15
A16
UA16
PCS5
PCS4
PCS3
PCS2
PCS1
PCS0
LCS
UCS
ALE
BHE
A18
A17
UBHE
UA18
UA17
D2
74LS245
DT/R
DEN
DIR
E
D0
D1
D2
D3
D4
D5
D6
D7
DB
D3
74LS245
D4
74LS373
R20
100
OE
Q0
Q1
Q2
Q3
Q4
Q5
Q6
Q7
A0
A1
A2
A3
A4
A5
A6
A7
AB
D5
74LS373
R21
100
A8
A9
A10
A11
A12
A13
A14
A15
D6
74LS375
E0,1
E2,3
A16
A17
A18
BHE
THERMO
ALARM
INTRF
X1B.26
X1B.10
X1B.29
D39
74F04
TO0
NTMR0
P22
X73.1
KEY INT
DRE INT
P24
X73.17
X1A.14
V6
1N4448
TMRINT
V31
1N4448
R7
3x 4,7k
X73.9
Reset
KEYINT
DREINT
FMRINT
NMIE

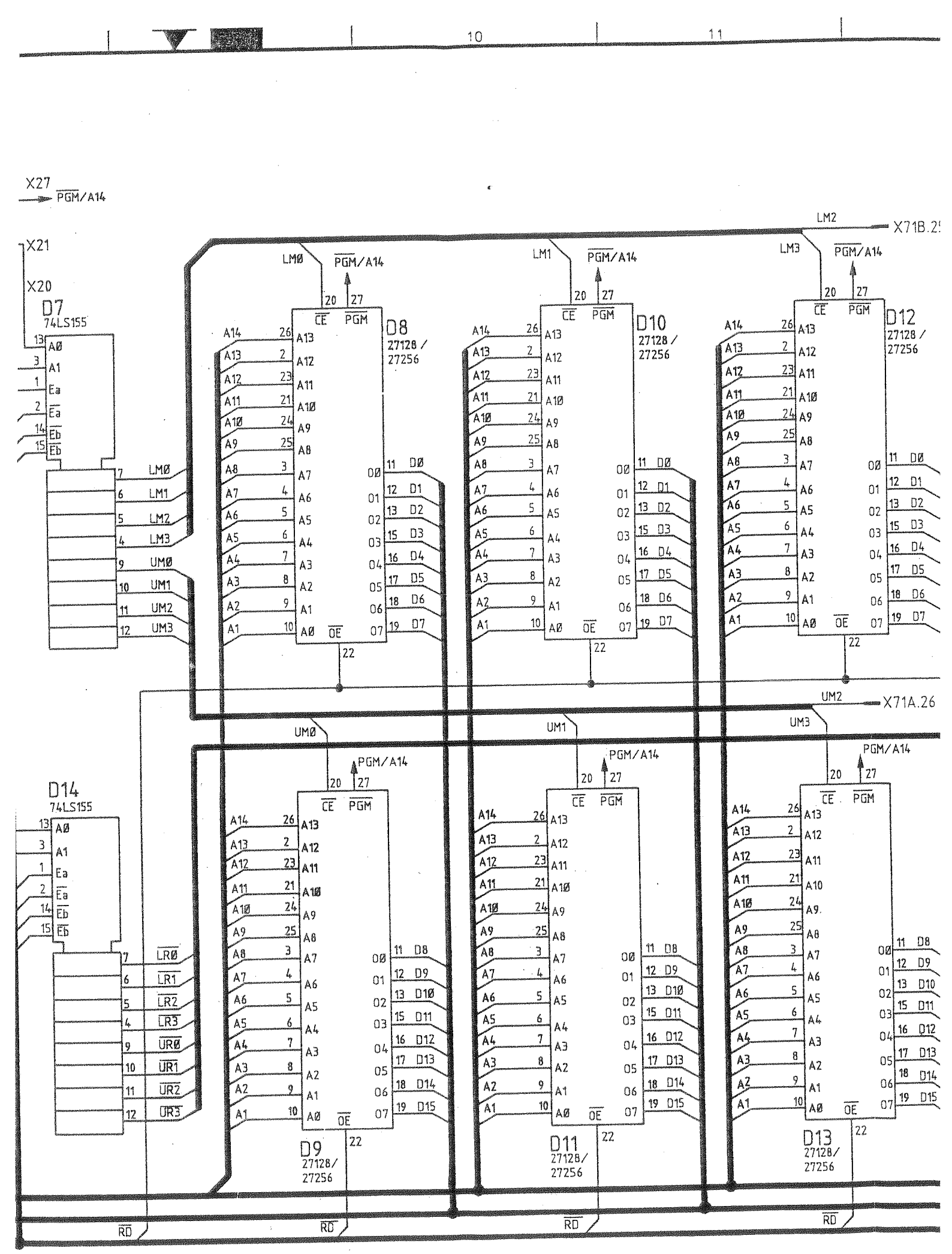
10
11
X27
PGM/A14
X21
X20
D7
74LS155
A0
A1
Ea
Ea
Eb
Eb
LM0
LM1
LM2
LM3
UM0
UM1
UM2
UM3
X71B.25
X71A.26
D8
27128 /
27256
D10
27128 /
27256
D12
27128 /
27256
D14
74LS155
LR0
LR1
LR2
LR3
UR0
UR1
UR2
UR3
D9
27128/
27256
D11
27128/
27256
D13
27128/
27256
CE
PGM
OE
RD

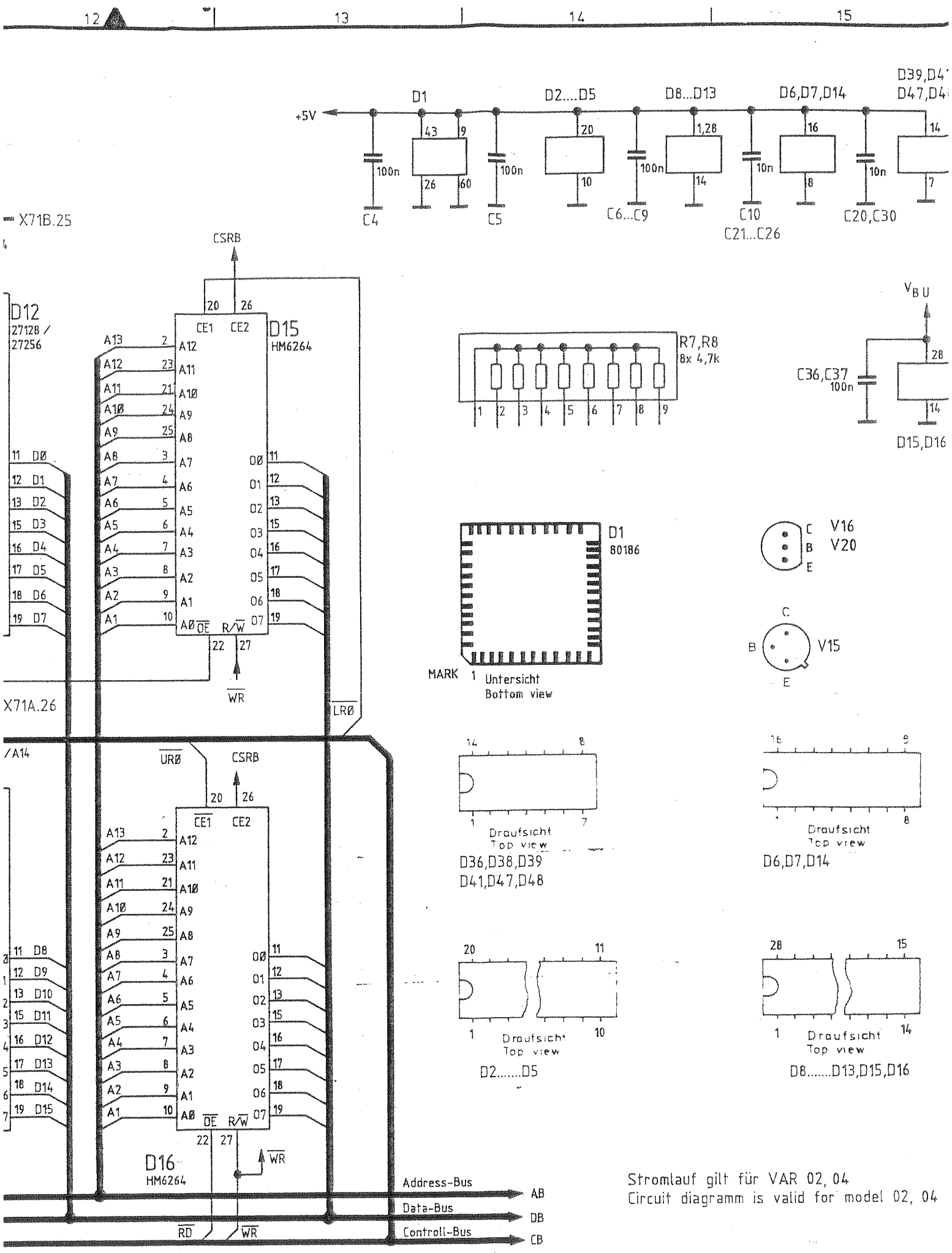

Stromlauf gilt für VAR 02, 04
Circuit diagramm is valid for model 02, 04

Stromlauf zu Digitalteil / Digital section		Z	Zeichn.-Nr. 802.4517 S
CMT	reg. i. V. 802.2020 V	erste Z.	

ROHDE & SCHWARZ

SERVICE INSTRUCTIONS

1st Modulation Generator Module

802.5713.02

Printed in West Germany

Contents

5 Service Manual of 1st Modulation Generator Module

(See circuit diagram 802.5713 S)

5.1 Function Description

The module consists of two function units: AF synthesizer and modulation control unit.

5.1.1 AF Synthesizer

The AF synthesizer covers the frequency range from 20 Hz to 25 kHz. It does not contain an oscillator and is driven at input GENCP via a TTL signal whose frequency is 32 times the desired AF and whose High level is divided from 5 V down to 100 mV before it is applied to the input comparator N100 of the AF synthesizer which is set to a threshold voltage of 50 mV.

The TTL signal regenerated in this manner clocks the shift registers D2 and D3 connected as a sinewave generator so that a stepped sinewave with 32 steps per cycle is generated. The change in polarity after 16 steps is achieved by the frequency divider D1 which divides the input frequency by 32 and thus loads the shift chain with 16 Low levels and 16 High levels per AF cycle. The stepped sinewave is balanced-to-earth at the output of adder N1 and has an amplitude of 2.5 V.

Three parallel, active Butterworth lowpass filters with different cut-off frequencies are then connected to smoothen the stepped sinewave. The first filter is used for frequencies from 20 Hz to 300 Hz, the second from >300 Hz to 4 kHz and the third from >4 kHz to 25 kHz. This prevents the distortion from being increased to a non-permissible level at low frequencies. The automatically selected filter is connected via N6.

A signal generated in the same manner from the same frequency range and with the same level (V_{rms} = 1.77 V) can be added (double tone) at the summing input PILINT (N7).

The circuit then contains three digital level attenuators with which the output level can be finely adjusted. These attenuators are the D/A converter N8 for 256 steps, the fine range attenuator N10 with 8 steps and the coarse attenuator 1:10 following amplifier N11 with V = 2.9.

Switchover between the signal reduced 10 times and the connected signal takes place at output X3 of the AF synthesizer using a relay because of the high maximum possible level of V_{rms} = 5.1 V.

5.1.2 Modulation Control Unit

The second function unit on the module is the modulation controller where different internal and external signals are combined and drive the AM and FM modulators at two outputs.

An external signal whose level can be modified in 8 steps (Gain = 0.4 to 10), in order to achieve V_{rms} = approx. 1 V, is applied to X4. The signal obtained can be routed to a peak-value meter by N16 (internal output MODMES). N17 is used to select between the external signal and the signal of the AF synthesizer which is available here with a constant level. The internal input EXTMOD (X1.B24) is not used.

The connection of the adder N20 is selected such that the two internally generated signals "Pilot tone" and "AF synthesizer" have a maximum level of V_{rms} = 1 V (AF synthesizer constant, pilot tone adjustable). These three signals can be distributed individually or combined to an AM path and an FM path via N21 (1st signal distribution) where the AM path is directly connected to the AM output and the following signal conditioning is possible with the FM path:

- A programmable level attenuator is used to adjust to various operating points on the FM modulator characteristic depending on the selected centre frequency.

- A second level divider is used to set the frequency deviation in 256 steps.

  Optionally:

  - Internal preemphasis for ΦM generation with 20 dB/decade (0 dB at 10 kHz, -20 dB at 1 kHz) or

  - Direct output for FM.

5.2 Testing and Adjustment

5.2.1 Testing the Input Stage

X1.A22 (GENCP): $f = 32 \times f_{AF}$, i.e. 640 Hz $\leq f \leq$ 800 kHz, squarewave voltage (V_{Low} = 0 V, V_{High} = 100 mV) but distorted above $f \geq$ 100 kHz by series-connected lowpass; $V_{max.}$ remains at 100 mV.

P1: TTL signal with $f = 32 \times f_{AF}$

5.2.2 Testing the Sinewave Generator

D1/3: TTL signal with $f = f_{AF}$

P4: Stepped sinewave (32 steps/cycle) with $f = f_{AF}$, v = 2.5 V ±1%.

5.2.3 Testing the Reference Voltage

P3: DC voltage V = +5 V ±0.3%.

5.2.4 Testing the Filter

P5: Sinewave signal with $f = f_{AF}$ and V_{rms} = 1.768 V ±1%

5.2.5 Testing and Adjustment of the Level Attenuator (Input Attenuator)

Set the following AF levels on the instrument with f = 1 kHz.
Set 5.10 V AF level. Using R51 adjust voltage at X505 to 5.10 V_{rms} ± 5 mV.

Measure the voltages at P6.

AF level [V]	V_{rms} [V] at P6
2.54	0.877
2.56	0.884
3.84	1.326 ±2%
4.48	1.547 ±2%
4.80	1.657 ±2%
4.96	1.713 ±2%
5.04	1.740 ±2%
5.08	1.754 ±2%
5.10	1.761 ±2%

5.2.6 Testing the Fine Attenuator

Set the following AF levels on the instrument with f = 1 kHz.

Measure the voltages at P7.

AF level [V]	V_{rms} [V] at P7
4.00	4.00 ±2%
2.00	2.00 ±2%
1.00	1.00 ±2%
0.40	0.40 ±2%
0.20	0.20 ±2%
0.10	0.10 ±2%

5.2.7 Testing the Coarse Attenuator

Set the following AF levels on the instrument with f = 1 kHz.

Measure the voltages at X505.

AF level [mV]	V_{rms} [mV] at X505
50.0	50.0 ±2%
50.5	50.5 ±2%

5.2.8 Testing the Amplifier for External Modulation

Apply the following AF levels to X504 with f = 1 kHz.

Measure the voltages at P8.

V_{rms} [mV] at X504	V_{rms} [mV] at P8
2500	1000 Tolerance: ±1.5%
1560	1000
1000	1000
625	1000
385	1000
250	1000
156	1000
100	1000

5.2.9 Testing the Signal Selection

Apply a sinewave signal with f = 1 kHz and V_{rms} = 1 V to X504.

Setting	Key sequence (receiver test)	Monitoring using oscilloscope	
		At N18/7	At N20/6
two-tone AM via EXT and INT1 (3 kHz)	50% EXT 3 kHz AF INT1 50% INT1	———	EXT signal (1 kHz) AF synth. signal (3 kHz)
AM via INT1	OFF 50% INT1	———	AF synth. signal (3 kHz)
Double modulation: AM via INT1 (3 kHz) FM via EXT	50% INT1 2 kHz EXT	EXT signal (1 kHz)	AF synth. signal (3 kHz)
AM via EXT	OFF 50% EXT	EXT signal (1 kHz)	———

5.2.10 Testing the 1st Signal Distribution

Apply a sinewave signal with f = 1 kHz and V_{rms} = 1 V to X504.

Setting	Key sequence (receiver test)	Monitoring using oscilloscope	
		At N22/6	At N23/7 = P9
Double modulation: AM via EXT (1 kHz) FM via INT1 (3 kHz)	50% EXT 2 kHz INT1	EXT signal (1 kHz)	INT1 signal (3 kHz)
Double modulation: AM via INT1 (3 kHz) FM via EXT	50% INT1 2 kHz EXT	INT1 signal (3 kHz)	EXT signal (1 kHz)
FM via INT1	OFF 2 kHz INT1	———	INT1 signal (3 kHz)

5.2.11 Testing the FM Characteristic Correction

- Set 25 kHz FM modulation.
- Vary the carrier frequency in the range 1 MHz to 1 GHz.

The measured deviation may deviate by ±2%.

5.2.12 Testing the FM Deviation Setting

- Set FM modulation; carrier frequency 500 MHz.
- Vary the deviation in the range 100 Hz to 100 kHz; AF = 1 kHz.

The error may be ± 1.5 %.

5.2.13 Testing the Preemphasis

- Set phase modulation, fixed centre frequency, fixed phase deviation.

When varying f_{AF}, the voltage at X1.B31 must change in the same direction and proportional to f_{AF}.

5.2.14 Testing the 2nd Signal Distribution

- Set any FM modulation. The voltage at X1.B31 must remain constant when varying f_{AF}.

- Set any phase modulation. The voltage at X1.B31 must change proportionally to f_{AF} when the latter is changed.

ROHDE & SCHWARZ
MÜNCHEN

Schaltteillisten
Stromläufe
Bestückungspläne

Parts lists
Circuit diagrams
Components plans

R 29500 Bl. 2

ROHDE&SCHWARZ	Äl	Datum Date	Schaltteilliste für Parts list for	Sachnummer Stock No.	Blatt Page
	16	0387	EE 1.MODULATIONSGENERATOR 1ST MOD.GENERATOR	802.5713.01 SA	1

Kennzeichen Component No.	Benennung/Beschreibung Designation	Sachnummer Stock No.	enthalten in contained in
C1	CE 100UF+-20%25V 8RDX9,5 ELECTROLYTIC CAPACITOR MATSUSHITA ECE-A1ESS-101	803.0580	
C2	CE 100UF+-20%25V 8RDX9,5 ELECTROLYTIC CAPACITOR MATSUSHITA ECE-A1ESS-101	803.0580	
C3	CE 22UF+-20%16V5RDX5RAD.A ELECTROLYTIC CAPACITOR NCC SRE 22UF/16V+-20%	358.6062	
C4	CE 100UF+-20%25V 8RDX9,5 ELECTROLYTIC CAPACITOR MATSUSHITA ECE-A1ESS-101	803.0580	
C5	CE 22UF+-20%16V5RDX5RAD.A ELECTROLYTIC CAPACITOR NCC SRE 22UF/16V+-20%	358.6062	
C6	CE 100UF+-20%25V 8RDX9,5 ELECTROLYTIC CAPACITOR MATSUSHITA ECE-A1ESS-101	803.0580	
C7	CE 100UF+-20%25V 8RDX9,5 ELECTROLYTIC CAPACITOR MATSUSHITA ECE-A1ESS-101	803.0580	
C8	CE 22UF+-20%16V5RDX5RAD.A ELECTROLYTIC CAPACITOR NCC SRE 22UF/16V+-20%	358.6062	
C9	CE 100UF+-20%25V 8RDX9,5 ELECTROLYTIC CAPACITOR MATSUSHITA ECE-A1ESS-101	803.0580	
C10	CE 22UF+-20%16V5RDX5RAD.A ELECTROLYTIC CAPACITOR NCC SRE 22UF/16V+-20%	358.6062	
C11	CK 15NF+-1%63V7,5QUX13 KP CAPACITOR SIEMENS B33531-A5153-F	CK 340.8063	
C12	CK 10NF+-1%63V7,5QUX13 KP CAPACITOR SIEMENS B33531-A5103-F	CK 340.9076	
C13	CK 22NF+-5%63V5RM MKT CAPACITOR WIMA MKS2/63/0,022UF/5%	CK 099.2881	
C14	CK 10NF+-1%63V7,5QUX13 KP CAPACITOR SIEMENS B33531-A5103-F	CK 340.9076	
C15	CK 39NF+-1%63V10QUX13 KP CAPACITOR SIEMENS B33531-A5393-F	CK 099.1940	
C16	CK 2,4NF+-1%63V,3QUX11KP CAPACITOR SIEMENS B33531-A5242-F	CK 334.5637	
C17	CC 100NF+-10%50V5K1200VIE CAPACITOR UNION CARB CK05BX104K	CC 084.5350	
C18	CK 6,8NF+-2,5%63V RM5 KP POLYPROPYLENE CAPACITOR WIMA FKP2 6800/2,5%/63V	CK 099.6170	

Für diese Unterlag halten wir uns alle Re /or

Kennzeichen Component No.	Benennung/Beschreibung Designation	Sachnummer Stock No.	enthalten in contained in
C19	CK 4,7NF+-1%63V6,3X11 KP PLASTIC-FOIL CAPACITOR SIEMENS B33531-A5472-F	CK 283.1701	
C20	CK 6,8NF+-2,5%63V RM5 KP POLYPROPYLENE CAPACITOR WIMA FKP2 6800/2,5%/63V	CK 099.6170	
C21	CK 3,3NF+-1%63V6,3QUX11KP CAPACITOR SIEMENS B33531-A5332-F	CK 340.9030	
C22	CK 15NF+-1%63V7,5QUX13 KP CAPACITOR SIEMENS B33531-A5153-F	CK 340.8063	
C23	CK 1NF+-2,5%63V RM5 KP POLYPROPYLENE CAPACITOR WIMA FKP2 1000/2,5%/63V	CK 099.6129	
C24	CK 1,5NF+-2,5%63V RM5 KP POLYPROPYLENE CAPACITOR WIMA FKP2 1500/2,5%/63V	CK 099.6135	
C25	CK 1NF+-2,5%63V RM5 KP POLYPROPYLENE CAPACITOR WIMA FKP2 1000/2,5%/63V	CK 099.6129	
C26	CK 3,3NF+-2,5%63V RM5 KP POLYPROPYLENE CAPACITOR WIMA FKP2 3300/2,5%/63V	CK 099.6158	
C27	CK 470PF+-2,5%63V RM5 KP POLYPROPYLENE CAPACITOR WIMA FKP2 470/2,5%/63V	CK 099.6106	
C28	CC 10NF-20+50%7X8R4000 CAPACITOR VALVO 2222 63051 64051103	CC 087.7525	
C29	CC 10NF-20+50%7X8R4000 CAPACITOR VALVO 2222 63051 64051103	CC 087.7525	
C30	CC 100NF+-10%50V5K1200VIE CAPACITOR UNION CARB CK05BX104K	CC 084.5350	
C31	CC 100NF+-10%50V5K1200VIE CAPACITOR UNION CARB CK05BX104K	CC 084.5350	
C32	CC 100NF+-10%50V5K1200VIE CAPACITOR UNION CARB CK05BX104K	CC 084.5350	
C33	CC 10NF-20+50%7X8R4000 CAPACITOR VALVO 2222 63051 64051103	CC 087.7525	
C34	CC 10NF-20+50%7X8R4000 CAPACITOR VALVO 2222 63051 64051103	CC 087.7525	
C35	CC 10NF-20+50%7X8R4000 CAPACITOR VALVO 2222 63051 64051103	CC 087.7525	
C37	CK 2,7NF+-1%63V6,3QUX11KP CAPACITOR SIEMENS B33531-A5272-F	CK 340.6754	
C38	CK 3,3NF+-2,5%63V RM5 KP POLYPROPYLENE CAPACITOR WIMA FKP2 3300/2,5%/63V	CK 099.6158	

ROHDE&SCHWARZ	Äl	Datum Date	Schaltteilliste für Parts list for	Sachnummer Stock No.	Blatt Page
	16	0387	EE 1.MODULATIONSGENERATOR 1ST MOD.GENERATOR	802.5713.01 SA	3

Kennzeichen Component No.	Benennung/Beschreibung Designation	Sachnummer Stock No.	enthalten in contained in
C39	CK 3,3NF+-2,5%63V RM5 KP POLYPROPYLENE CAPACITOR WIMA FKP2 3300/2,5%/63V	CK 099.6158	
C40	CE 22UF+-20%16V5RDX5RAD.A ELECTROLYTIC CAPACITOR NCC SRE 22UF/16V+-20%	358.6062	
C41	CE 2,2UF+-20%50V 4RDX5 ELEKTROLYTIC CAPACITOR NATIONAL ECE-A1HKS-2R2	803.0944	
C42	CE 100UF+-20%25V 8RDX9,5 ELECTROLYTIC CAPACITOR MATSUSHITA ECE-A1ESS-101	803.0580	
D1	BL CD4520BE 2XBIN.COUNT COUNTER RCA CD4520BE	BL 299.6908	
D2	BL CD4015BE 2X4B.SH.REG SHIFT REGISTER RCA CD4015BE	BL 086.7044	
D3	BL CD4015BE 2X4B.SH.REG SHIFT REGISTER RCA CD4015BE	BL 086.7044	
D4	BL CD4094BE 8BIT SH.REG SHIFT REGISTER RCA CD4094BE	BL 586.7726	
BIS/TO D9			
K14	SR 5V2000HM 1MAL UM 1 REED RELAY ELECTROL RA 3042-1051-02	SR 267.5364	
N1	BO LF412CN 2XFET OPAMP OPERATIONAL AMPLIFIER NSC LF412CN	356.0521	
N2	BO LF412CN 2XFET OPAMP OPERATIONAL AMPLIFIER NSC LF412CN	356.0521	
BIS/TO N5			
N6	BL CD4053BE 3X2CH. MUX MULTIPLEXER RCA CD4053BE	BL 565.3080	
N7	BO LF412CN 2XFET OPAMP OPERATIONAL AMPLIFIER NSC LF412CN	356.0521	
N8	BJ AD7523JN 8B.D/A-CONV D/A CONVERTER MICRO POW. MP-7523JN	801.8219	
N9	BO LF351N BIFET OPAMP OPERATIONAL AMPLIFIER NSC LF351N	BO 301.6105	
N10	BL CD4051BE 8CH. MUX MULTIPLEXER RCA CD4051BE	BL 339.4174	

Kennzeichen Component No.	Benennung/Beschreibung Designation	Sachnummer Stock No.	enthalten in contained in
N11	BO LF351N BIFET OPAMP OPERATIONAL AMPLIFIER NSC LF351N	BO 301.6105	
N12	BJ TL601CP 2X ANALOGSCH ANALOG SWITCH TEXAS TL601CP MJG	BJ 213.4530	
N13	BO NE5532FE 2XL.N.OPAMP OPERATIONAL AMPLIFIER VALVO NE5532FE	BO 332.0444	
N15	BO LF412CN 2XFET OPAMP OPERATIONAL AMPLIFIER NSC LF412CN	356.0521	
N16	BJ TL601CP 2X ANALOGSCH ANALOG SWITCH TEXAS TL601CP MJG	BJ 213.4530	
N17	BL CD4053BE 3X2CH. MUX MULTIPLEXER RCA CD4053BE	BL 565.3080	
N18	BO LF412CN 2XFET OPAMP OPERATIONAL AMPLIFIER NSC LF412CN	356.0521	
N19	BO LF412CN 2XFET OPAMP OPERATIONAL AMPLIFIER NSC LF412CN	356.0521	
N20	BO LF351N BIFET OPAMP OPERATIONAL AMPLIFIER NSC LF351N	BO 301.6105	
N21	BL CD4052BE 2X4CHAN.MUX MULTIPLEXER/DEMULTIPLEXER MOTOROLA MC14052BCP	BL 243.1200	
N22	BO LF351N BIFET OPAMP OPERATIONAL AMPLIFIER NSC LF351N	BO 301.6105	
N23	BO LF412CN 2XFET OPAMP OPERATIONAL AMPLIFIER NSC LF412CN	356.0521	
N24	BL CD4052BE 2X4CHAN.MUX MULTIPLEXER/DEMULTIPLEXER MOTOROLA MC14052BCP	BL 243.1200	
N25	BJ AD7523JN 8B.D/A-CONV D/A CONVERTER MICRO POW. MP-7523JN	801.8219	
N26	BJ AD7523JN 8B.D/A-CONV D/A CONVERTER MICRO POW. MP-7523JN	801.8219	
N27	BO LF351N BIFET OPAMP OPERATIONAL AMPLIFIER NSC LF351N	BO 301.6105	
N28	BO LF412CN 2XFET OPAMP OPERATIONAL AMPLIFIER NSC LF412CN	356.0521	
N29	BO LM310N VOLT.FOLLOW VOLTAGE FOLLOWER NSC LM310N	266.0923	
N30	BO LM310N VOLT.FOLLOW VOLTAGE FOLLOWER NSC LM310N	266.0923	

Kennzeichen Component No.	Benennung/Beschreibung Designation	Sachnummer Stock No.	enthalten in contained in
N31	BL CD4051BE 8CH. MUX MULTIPLEXER RCA CD4051BE	BL 339.4174	
N100	BO LM311N COMPAR COMPARATOR NSC LM311N	BO 394.8755	
P1 BIS/TO P16	VL WIRE-WRAP PIN WIRE-WRAP PIN BERG NR. 75 403-001	VL 088.4507	
R1	RL 0,35W2,21 OHM+-1%TK50 METALFILMRESISTOR RESISTA MK2 2,21 OHM 1% TK50	RL 099.7948	
R2	RL 0,35W2,21 OHM+-1%TK50 METALFILMRESISTOR RESISTA MK2 2,21 OHM 1% TK50	RL 099.7948	
R3	RL 0,35W 10,0 OHM+-1%TK50 RESISTOR DRALORIC SMA0207/10OHM-F-D	RL 082.8852	
R4	RL 0,35W 100 OHM+-1%TK50 METALFILM-RESISTOR DRALORIC SMA0207/100/HM-F-D	RL 082.6543	
R5	RL 0,35W2,21 OHM+-1%TK50 METALFILMRESISTOR RESISTA MK2 2,21 OHM 1% TK50	RL 099.7948	
R6	RL 0,35W2,21 OHM+-1%TK50 METALFILMRESISTOR RESISTA MK2 2,21 OHM 1% TK50	RL 099.7948	
R7	RL 0,35W 1KOHM+-1%TK50 RESISTOR DRALORIC SMA0207/1K-F-C	RL 082.2160	
R8	RL 0,35W 1KOHM+-1%TK50 RESISTOR DRALORIC SMA0207/1K-F-C	RL 082.2160	
R9	RL 0,35W 10,0KOHM+-1%TK50 RESISTOR DRALORIC SMA0207/10K-F-D	RL 083.1297	
R10	RL 0,35W 10,0KOHM+-1%TK50 RESISTOR DRALORIC SMA0207/10K-F-D	RL 083.1297	
R11	RL 0,35W 100 OHM+-1%TK50 METALFILM-RESISTOR DRALORIC SMA0207/100/HM-F-D	RL 082.6543	
R12	RL 0,35W 4,75KOHM+-1%TK50 RESISTOR DRALORIC SMA0207/4,75K-F-D	RL 083.1097	
R13	RL 0,35W 1KOHM+-1%TK50 RESISTOR DRALORIC SMA0207/1K-F-C	RL 082.2160	
R14	RL 0,35W 178 KOHM+-1%TK50 RESISTOR DRALORIC SMA/207/178K-F-C	RL 083.2187	

Kennzeichen Component No.	Benennung/Beschreibung Designation	Sachnummer Stock No.	enthalten in contained in
R15	RL 0,35W 60,4KOHM+-1%TK50 RESISTOR DRALORIC SMA0207/60,4K-F-C	RL 083.1851	
R16	RL 0,35W 36,5KOHM+-1%TK50 RESISTOR DRALORIC SMA0207/36,5K-F-C	RL 083.1716	
R17	RL 0,35W 27,4KOHM+-1%TK50 RESISTOR DRALORIC SMA 0207/27,4K-F-C	RL 082.2583	
R18	RL 0,35W22,6KOHM+-1%TK50 RESISTOR DRALORIC SMA0207/22,6K-F-C	RL 082.2219	
R19	RL 0,35W 19,6KOHM+-1%TK50 RESISTOR DRALORIC SMA/207/19,6K-F-C	RL 083.1516	
R20	RL 0,35W 18,2KOHM+-1%TK50 RESISTOR DRALORIC SMA/207/18,2K-F-C	RL 083.1480	
R21	RL 0,35W 17,4KOHM+-1%TK50 RESISTOR DRALORIC SMA0207/17,4K-F-C	RL 083.1468	
R22	RL 0,35W 17,4KOHM+-1%TK50 RESISTOR DRALORIC SMA 0207/17,4K-F-C	RL 083.1468	
R23	RL 0,35W 18,2KOHM+-1%TK50 RESISTOR DRALORIC SMA/207/18,2K-F-C	RL 083.1480	
R24	RL 0,35W 19,6KOHM+-1%TK50 RESISTOR DRALORIC SMA/207/19,6K-F-C	RL 083.1516	
R25	RL 0,35W22,6KOHM+-1%TK50 RESISTOR DRALORIC SMA0207/22,6K-F-C	RL 082.2219	
R26	RL 0,35W 27,4KOHM+-1%TK50 RESISTOR DRALORIC SMA 0207/27,4K-F-C	RL 082.2583	
R27	RL 0,35W 36,5KOHM+-1%TK50 RESISTOR DRALORIC SMA0207/36,5K-F-C	RL 083.1716	
R28	RL 0,35W 60,4KOHM+-1%TK50 RESISTOR DRALORIC SMA0207/60,4K-F-C	RL 083.1851	
R29	RL 0,35W 178 KOHM+-1%TK50 RESISTOR DRALORIC SMA/207/178K-F-C	RL 083.2187	
R30	RL 0,35W 10,2KOHM+-1%TK50 RESISTOR DRALORIC SMA/207/10,2K-F-C	RL 082.2331	
R31	RL 0,35W 1,74KOHM+-1%TK50 RESISTOR DRALORIC SMA0207/1,74K-F-D	RL 083.0784	
R32	RL 0,35W 10,0KOHM+-1%TK50 RESISTOR DRALORIC SMA0207/10K-F-D	RL 083.1297	
R33	RL 0,35W 10,0KOHM+-1%TK50 RESISTOR DRALORIC SMA0207/10K-F-D	RL 083.1297	

Kennzeichen Component No.	Benennung/Beschreibung Designation	Sachnummer Stock No.	enthalten in contained in
R34	RL 0,35W 10,0KOHM+-1%TK50 RESISTOR DRALORIC SMA0207/10K-F-D	RL 083.1297	
R35	RL 0,35W 17,4KOHM+-1%TK50 RESISTOR DRALORIC SMA0207/17,4K-F-C	RL 083.1468	
R36	RL 0,35W 57,6KOHM+-1%TK50 RESISTOR DRALORIC SMA0207/57,6K-F-C	RL 083.6830	
R37	RL 0,35W 19,1KOHM+-1%TK50 RESISTOR DRALORIC SMA/207/19,1K-F-C	RL 083.1500	
R38	RL 0,35W 35,7KOHM+-1%TK50 RESISTOR DRALORIC SMA0207/35,7K-F-C	RL 083.1700	
R39	RL 0,35W 30,1KOHM+-1%TK50 RESISTOR DRALORIC SMA0207/30,1K-F-C	RL 083.1639	
R40	RL 0,35W 53,6KOHM+-1%TK50 RESISTOR DRALORIC SMA 0207/53,6K-F-C	RL 082.2590	
R41	RL 0,35W 2,61KOHM+-1%TK50 RESISTOR DRALORIC SMA0207/2,61K-F-D	RL 083.0903	
R42	RL 0,35W 8,06KOHM+-1%TK50 RESISTOR DRALORIC SMA0207/8,06K-F-D	RL 083.1222	
R43	RL 0,35W4,64KOHM+-1%TK50 RESISTOR DRALORIC SMA0207/4,64K-F-C	RL 082.1687	
R44	RL 0,35W 6,49KOHM+-1%TK50 RESISTOR DRALORIC SMA0207/6,49K-F-D	RL 083.1168	
R45	RL 0,35W 6,34KOHM+-1%TK50 RESISTOR DRALORIC SMA0207/6,34K-F-D	RL 083.1151	
R46	RL 0,35W 7,15KOHM+-1%TK50 RESISTOR DRALORIC SMA0207/7,15K-F-D	RL 083.1174	
R47	RL 0,35W 1,21KOHM+-1%TK50 RESISTOR DRALORIC SMA0207/1,21K-F-D	RL 083.0655	
R48	RL 0,35W 3,40KOHM+-1%TK50 RESISTOR DRALORIC SMA0207/3,40K-F-D	RL 083.1000	
R49	RL 0,35W 1,69KOHM+-1%TK50 RESISTOR DRALORIC SMA0207/1,69K-F-D	RL 083.0778	
R50	RL 0,35W 2,37KOHM+-1%TK50 RESISTOR DRALORIC SMA0207/2,37K-F-D	RL 083.0878	
R51	RS 0,3W 5KOHM+-10%CERMET TRIMMING POTENTIOMETER BOURNS 3296W-1- 5KOHM+-10%	RS 006.6698	
R52	RL 0,35W 2,00KOHM+-1%TK50 RESISTOR DRALORIC SMA0207/2,00K-F-D	RL 083.0826	

Kennzeichen Component No.	Benennung/Beschreibung Designation	Sachnummer Stock No.	enthalten in contained in
BIS/TO			
R54			
R55	RL 0,35W 1KOHM+-1%TK50 RESISTOR DRALORIC SMA0207/1K-F-C	RL 082.2160	
R56	RL 0,35W 499 OHM+-1%TK50 RESISTOR DRALORIC SMA0207/499OHM-F-D	RL 083.0410	
R57	RL 0,35W 301 OHM+-1%TK50 RESISTOR DRALORIC SMA0207/301OHM-F-D	RL 083.0210	
R58	RL 0,35W 100 OHM+-1%TK50 METALFILM-RESISTOR DRALORIC SMA0207/100/HM-F-D	RL 082.6543	
R59	RL 0,35W 49,9 OHM+-1%TK50 RESISTOR RESISTA MK2	RL 082.9520	
R60	RL 0,35W30,10 OHM+-1%TK50 RESISTOR DRALORIC SMA0207/30,10HM-F-D	RL 082.9313	
R61	RL 0,35W 10,0 OHM+-1%TK50 RESISTOR DRALORIC SMA0207/10OHM-F-D	RL 082.8852	
R62	RL 0,35W 10,0 OHM+-1%TK50 RESISTOR DRALORIC SMA0207/10OHM-F-D	RL 082.8852	
R63	RL 0,35W 3,83KOHM+-1%TK50 RESISTOR DRALORIC SMA0207/3,83K-F-D	RL 082.6614	
R64	RL 0,35W 2,00KOHM+-1%TK50 RESISTOR DRALORIC SMA0207/2,00K-F-D	RL 083.0826	
R65	RL 0,35W 200KOHM+-1%TK50 RESISTOR DRALORIC SMA0207/200K-F-D	RL 083.2235	
R66	RL 0,35W 200KOHM+-1%TK50 RESISTOR DRALORIC SMA0207/200K-F-D	RL 083.2235	
R67	RL 0,35W18,20 OHM+-1%TK50 RESISTOR DRALORIC SMA0207/18,20HM-F-D TRIMMWERT/SELECTED	RL 082.9107	
R68	RL 0,35W2,00 OHM+-1%TK50 METALFILMRESISTOR RESISTA MK2 2,00 OHM 1%TK50	RL 099.7931	
R69	RL 0,35W 6,81KOHM+-1%TK50 RESISTOR DRALORIC SMA 0207/6,81K-F-C	RL 082.2560	
R70	RG 1,62KOHM+-1%TK100 1206 CHIP RESISTOR DRALORIC CGB 3216 1,62KOHM 1%	RG 006.9997	
R71	RL 0,35W 10,0KOHM+-1%TK50 RESISTOR DRALORIC SMA0207/10K-F-D	RL 083.1297	
R72	RL 0,35W3,97KOHM+-0,1%T25 RESISTOR DRALORIC SMA0207	RL 084.2297	

Kennzeichen Component No.	Benennung/Beschreibung Designation	Sachnummer Stock No.	enthalten in contained in
	TRIMMWERT/SELECTED		
R73	RL 0,35W 453 OHM+-1%TK50 RESISTOR DRALORIC SMA0207/453OHM-F-D	RL 083.0378	
R74	RL 0,35W 267 OHM+-1%TK50 RESISTOR DRALORIC SMA0207/267OHM-F-D	RL 083.0161	
R75	RL 0,35W 178 OHM+-1%TK50 RESISTOR DRALORIC SMA0207/178OHM-F-D	RL 083.0003	
R76	RL 0,35W 115 OHM+-1%TK50 RESISTOR DRALORIC SMA0207/115OHM-F-D	RL 082.9836	
R77	RL 0,35W 64,9 OHM+-1%TK50 RESISTOR DRALORIC SMA0207/64,9OHM-F-D	RL 082.9620	
R78	RL 0,35W 45,3 OHM+-1%TK50 RESISTOR DRALORIC SMA0207/45,3OHM-F-D	RL 082.9488	
R79	RL 0,35W26,70 OHM+-1%TK50 RESISTOR DRALORIC SMA0207/26,7OHM-F-D	RL 082.9265	
R80	RL 0,35W 47,5 OHM+-1%TK50 RESISTOR DRALORIC SMA0207/47,5OHM-F-D	RL 082.9507	
R81	RL 0,35W 100 OHM+-1%TK50 METALFILM-RESISTOR DRALORIC SMA0207/100/HM-F-D	RL 082.6543	
R82	RL 0,35W 2,00KOHM+-1%TK50 RESISTOR DRALORIC SMA0207/2,00K-F-D	RL 083.0826	
R83	RL 0,35W 2,00KOHM+-1%TK50 RESISTOR DRALORIC SMA0207/2,00K-F-D	RL 083.0826	
R84	RL 0,35W 3,57KOHM+-1%TK50 RESISTOR DRALORIC SMA0207/3,57K-F-D	RL 083.1022	
R85	RL 0,35W 2,00KOHM+-1%TK50 RESISTOR DRALORIC SMA0207/2,00K-F-D	RL 083.0826	
R86	RL 0,35W 1KOHM+-1%TK50 RESISTOR DRALORIC SMA0207/1K-F-C	RL 082.2160	
R87	RL 0,35W 3,57KOHM+-1%TK50 RESISTOR DRALORIC SMA0207/3,57K-F-D	RL 083.1022	
R88	RL 0,35W 2,00KOHM+-1%TK50 RESISTOR DRALORIC SMA0207/2,00K-F-D	RL 083.0826	
R89	RL 0,35W 3,57KOHM+-1%TK50 RESISTOR DRALORIC SMA0207/3,57K-F-D	RL 083.1022	
R90	RL 0,35W 1KOHM+-1%TK50 RESISTOR DRALORIC SMA0207/1K-F-C	RL 082.2160	

Kennzeichen Component No.	Benennung/Beschreibung Designation	Sachnummer Stock No.	enthalten in contained in
R91	RL 0,35W 5,62KOHM+-1%TK50 RESISTOR DRALORIC SMA0207/5,62K-F-C	RL 082.2190	
R92	RL 0,35W 5,90KOHM+-1%TK50 RESISTOR DRALORIC SMA0207/5,90K-F-D TRIMMWERT/SELECTED	RL 083.1145	
R93	RL 0,35W 1,74KOHM+-1%TK50 RESISTOR DRALORIC SMA0207/1,74K-F-D	RL 083.0784	
R94	RL 0,35W 100KOHM+-1%TK50 RESISTOR DRALORIC SMA0207/100K-F-C	RL 082.1764	
V1	AE BZX79/C9V1 0,5W Z-DI ZENER DIODE VALVO BZX79/C9V1	AE 012.2503	
V2	AD 1N4448 75V 0,15A UDI DIODE TEXAS INST 1N4448 GEGURTET	AD 012.0700	
V3	AD 1N4448 75V 0,15A UDI DIODE TEXAS INST 1N4448 GEGURTET	AD 012.0700	
V4	AE BZX79/C4V3 0,5W Z-DI ZENER DIODE VALVO BZX79/C4V3	AE 012.2426	
BIS/TO V9			
V10	AK BCY59IX NPN 45V 200MA TRANSISTOR SIEMENS BCY59IX	AK 010.5163	
V11	AE BZX79/C4V3 0,5W Z-DI ZENER DIODE VALVO BZX79/C4V3	AE 012.2426	
V12	AE BZX79/C4V3 0,5W Z-DI ZENER DIODE VALVO BZX79/C4V3	AE 012.2426	
V15	AD 1N4448 75V 0,15A UDI DIODE TEXAS INST 1N4448 GEGURTET	AD 012.0700	
W1	DX KABEL CABLE	802.5888	
X1	FP STECKERL.INDIR.64POLIG 64-PIN INSERT PANDUIT 100-064-033/999	FP 084.6470	
X2	FP BUCHSENLEISTE64P.ABGEW PANDUIT 100-064-533/999	FP 099.0614	
X504	FJ EINBAUSTECKER SYST.SMB FIXED CONNECTOR ROSENBERG 59S601-200D2	FJ 063.5116	
X505	FJ EINBAUSTECKER SYST.SMB FIXED CONNECTOR ROSENBERG 59S601-200D2	FJ 063.5116	

ROHDE & SCHWARZ	Äl	Datum Date	Schaltteilliste für Parts list for	Sachnummer Stock No.	Blatt Page
	16	0387	EE 1.MODULATIONSGENERATOR 1ST MOD.GENERATOR	802.5713.01 SA	11

Kennzeichen Component No.	Benennung/Beschreibung Designation	Sachnummer Stock No.	enthalten in contained in
X3A	VL WIRE-WRAP PIN WIRE-WRAP PIN BERG NR. 75 403-001	VL 088.4507	
X3B	VL WIRE-WRAP PIN WIRE-WRAP PIN BERG NR. 75 403-001	VL 088.4507	
X4A	VL WIRE-WRAP PIN WIRE-WRAP PIN BERG NR. 75 403-001	VL 088.4507	
X4B	VL WIRE-WRAP PIN WIRE-WRAP PIN BERG NR. 75 403-001	VL 088.4507	
			- ENDE -

Ansicht und Leitungsführung Lötseite
View of tracks on solder side

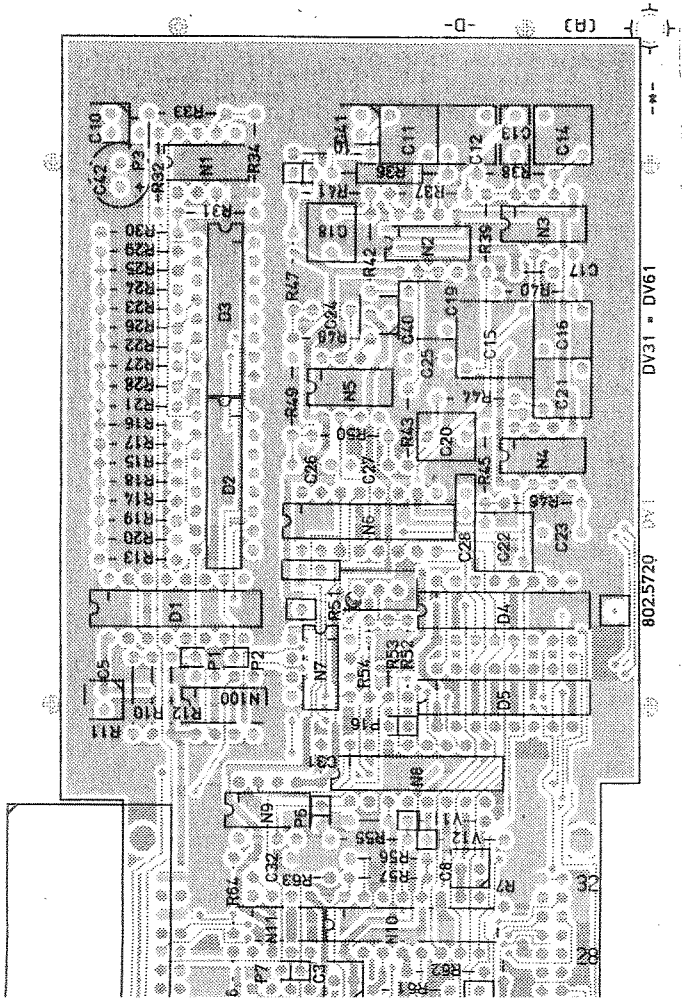

Ansicht und Leitungsführung Bauteilseite
View of tracks on component side

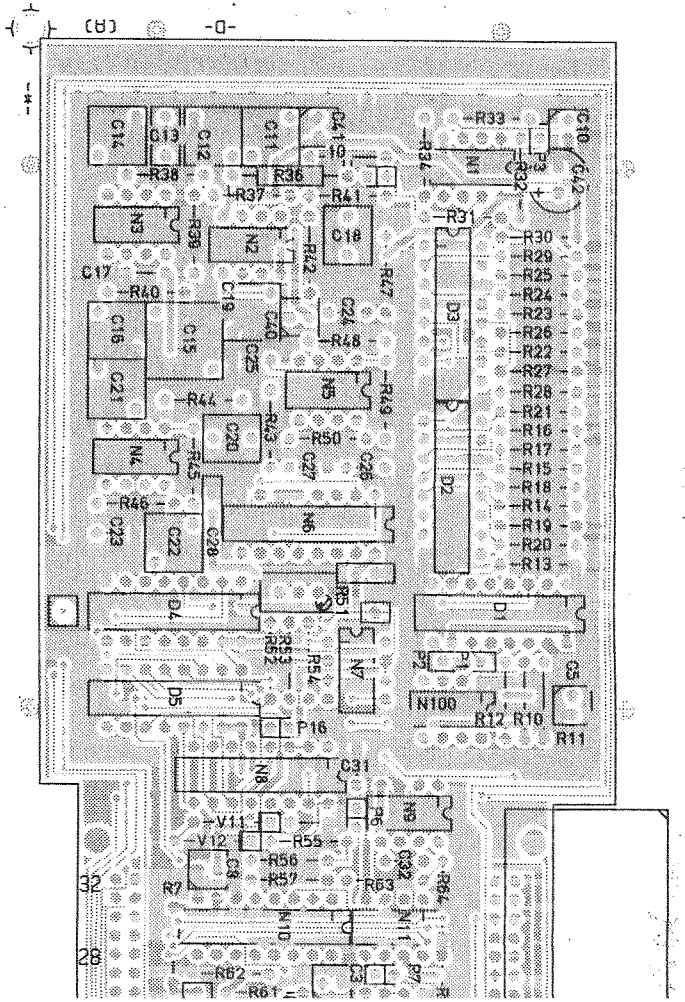

(hierzu HVC 250)

ACHTUNG: EGB!
Elektrostatisch gefährdete Bauelemente erfordern eine besondere Handhabung.

ATTENTION ESD!
Electrostatic sensitive devices require a special handling.

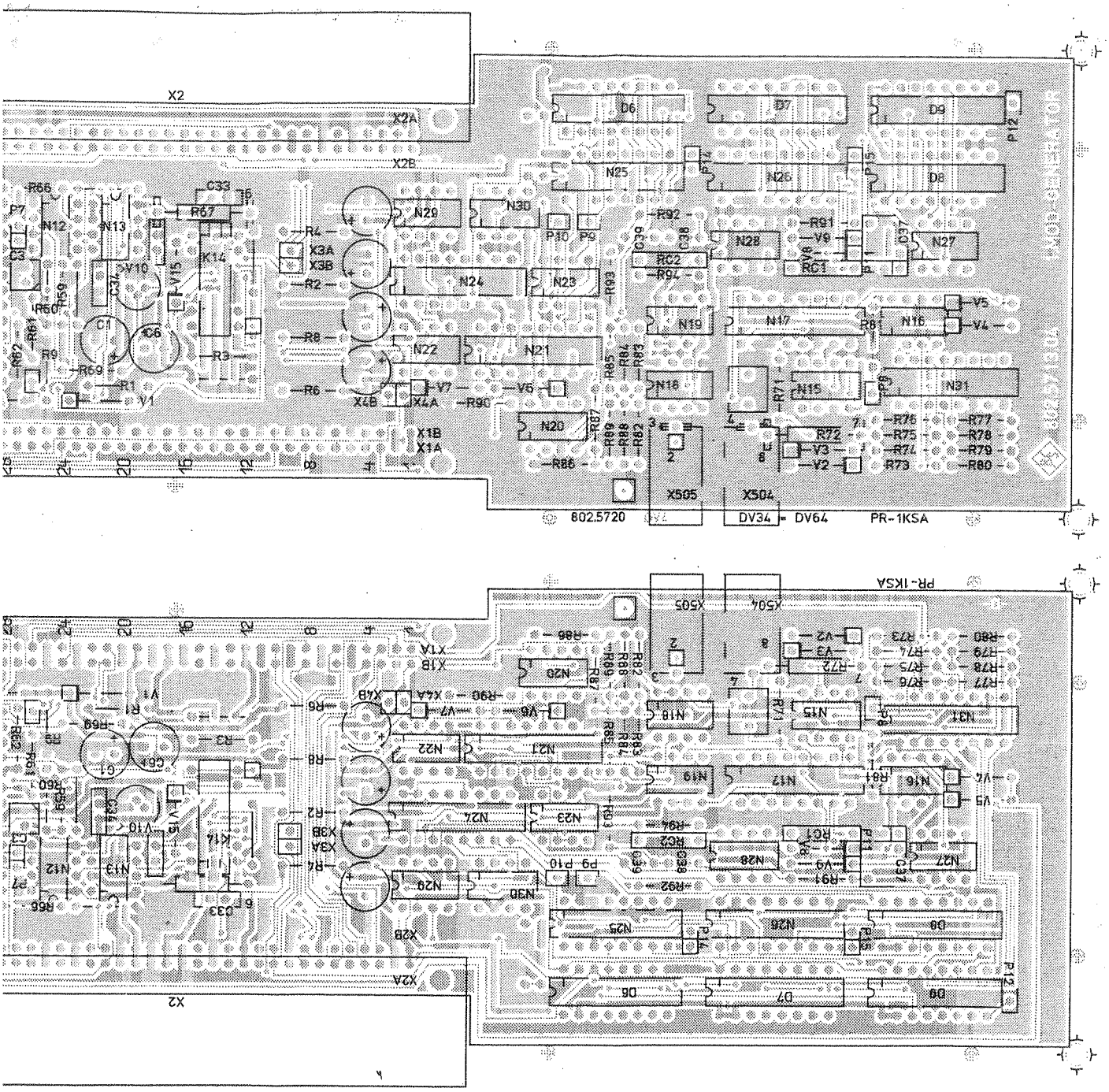

VARIANTENERKLÄRUNG/VERSION
VAR02 - GRUNDAUSFÜHRUNG/BASIC MODEL
VAR04 - AUSFUEHRUNG MIT C-NETZ MODIFKATION

I	35547	12.86	PR	Maße ohne Toleranzangabe		Maßstab 1 : 1
K	38951	11.87	IB			Halbzeug, Werkstoff
				1KSA	Tag	Name
				Bearb.	12.86	PR
				Gepr.		
				Norm		
Änd. Zust.	Änderungs-Mitteilung	Tag	Name	ROHDE & SCHWARZ		
				zu Gerät	CMT	

Benennung: Modulations Generator

Z

Zeichn.-Nr. 802.5713.01 EE

Blatt-Nr. 2 v. 2 Bl.

reg. i. V. 802.2020 V erste Z.

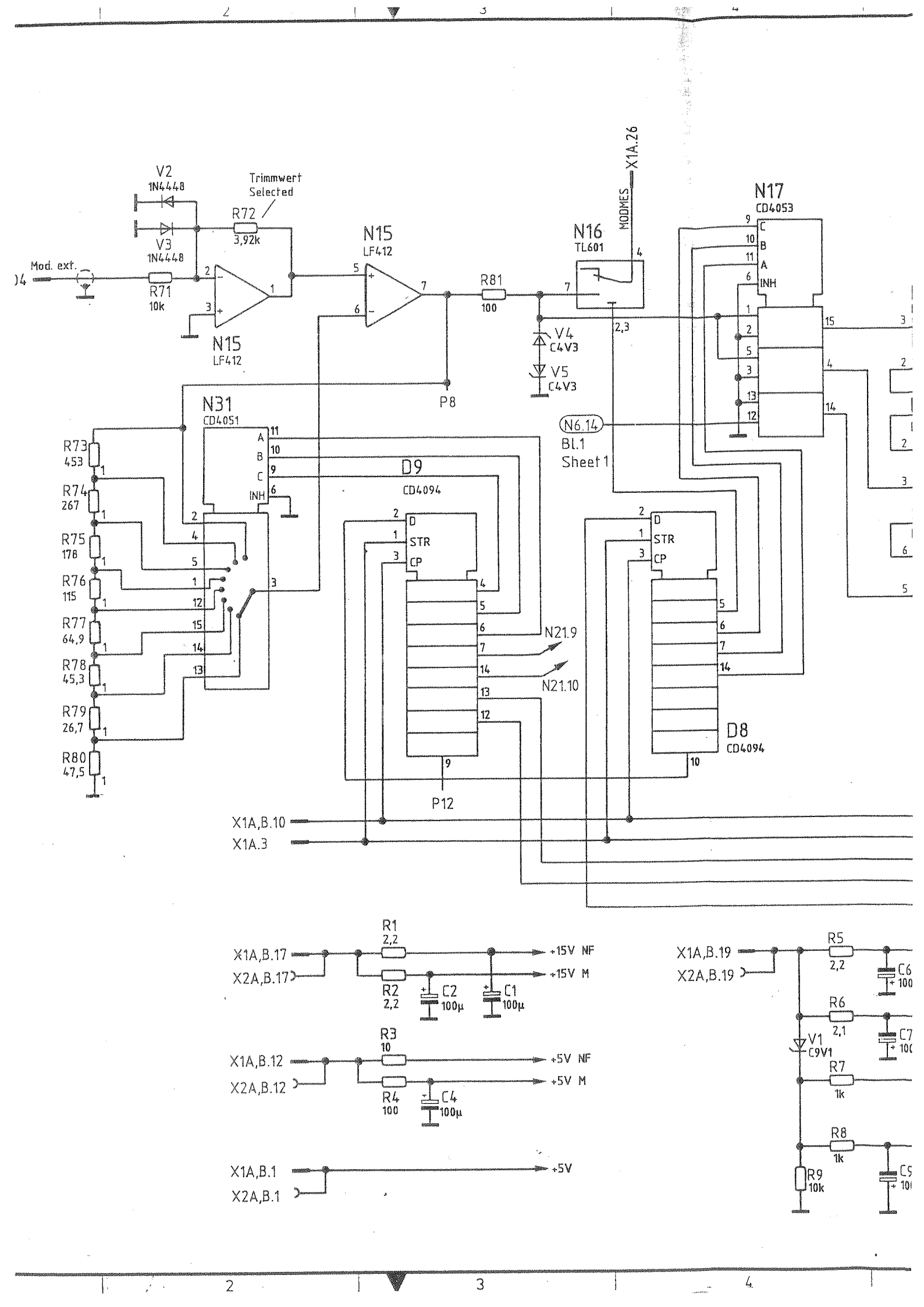
V2
1N4448
V3
1N4448
Trimmwert
Selected
R72
3,92k
Mod. ext.
R71
10k
N15
LF412
N15
LF412
R81
100
N16
TL601
MODMES
X1A.26
N17
CD4053
V4
C4V3
V5
C4V3
P8
N31
CD4051
R73
453
R74
267
R75
178
R76
115
R77
64,9
R78
45,3
R79
26,7
R80
47,5
N6.14
Bl.1
Sheet 1
D9
CD4094
D8
CD4094
N21.9
N21.10
P12
X1A,B.10
X1A.3
R1
2,2
R2
2,2
C2
100µ
C1
100µ
X1A,B.17
X2A,B.17
+15V NF
+15V M
R3
10
R4
100
C4
100µ
X1A,B.12
X2A,B.12
+5V NF
+5V M
X1A,B.1
X2A,B.1
+5V
X1A,B.19
X2A,B.19
R5
2,2
R6
2,1
V1
C9V1
R7
1k
R8
1k
R9
10k

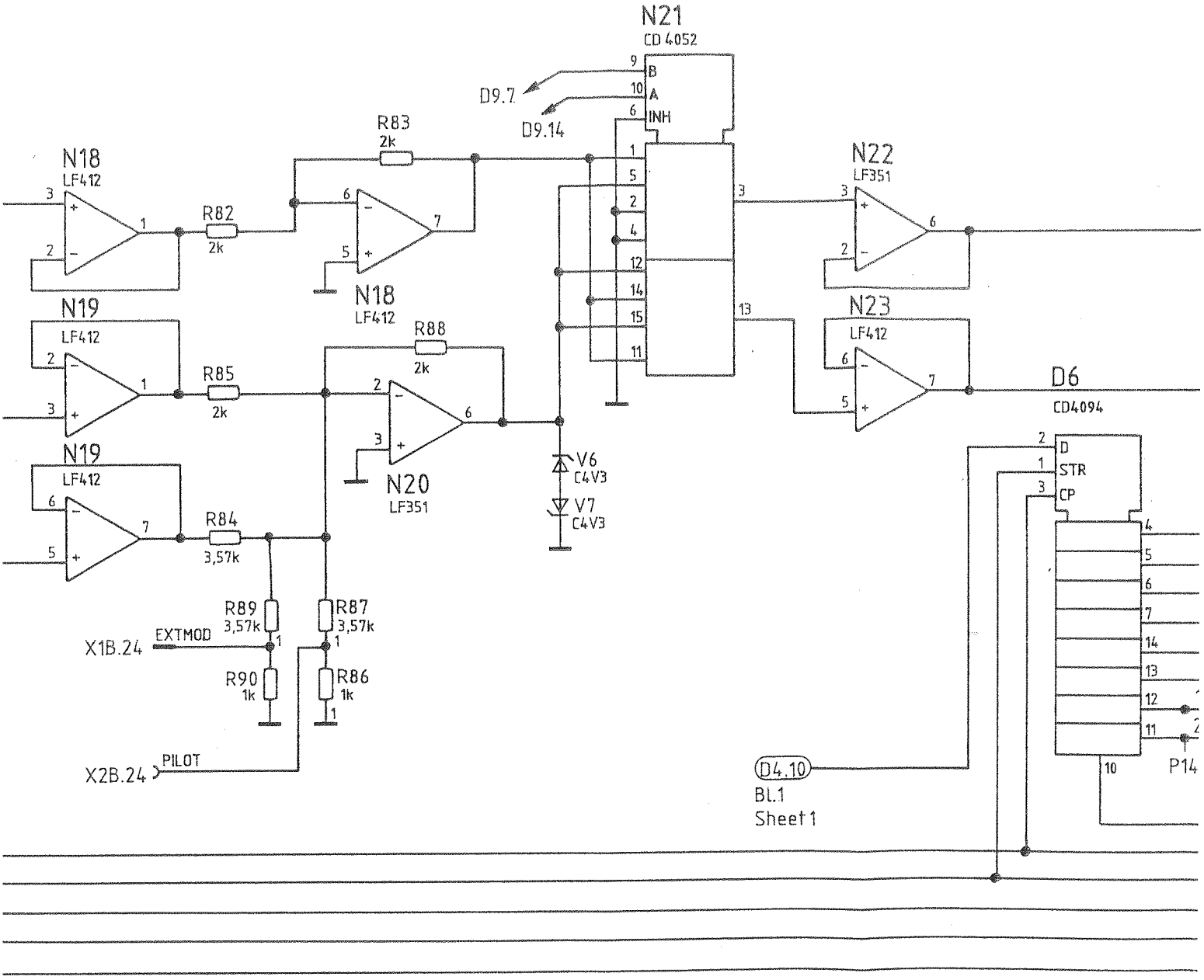
N21
CD 4052
B
A
INH
D9.7
D9.14
N18
LF412
R82
2k
R83
2k
N18
LF412
N19
LF412
R85
2k
R88
2k
N19
LF412
R84
3,57k
N20
LF351
V6
C4V3
V7
C4V3
N22
LF351
N23
LF412
D6
CD4094
D
STR
CP
P14
R89
3,57k
R87
3,57k
X1B.24
EXTMOD
R90
1k
R86
1k
X2B.24
PILOT
D4.10
BL.1
Sheet 1

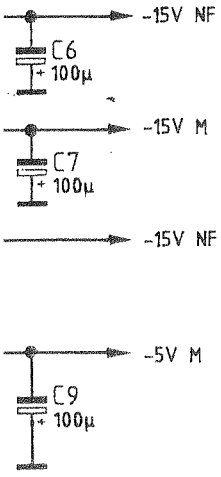
-15V NF
C6
100µ
-15V M
C7
100µ
-15V NF
-5V M
C9
100µ

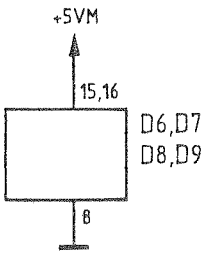
+5VM
15,16
D6,D7
D8,D9
8

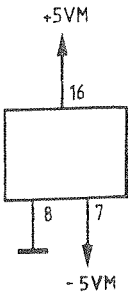
+5VM
16
N17,N21
N24,N31
8
7
-5VM

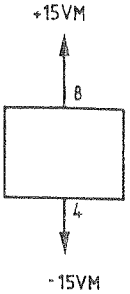
+15VM
8
N15,N18
N19,N23
N28
4
-15VM

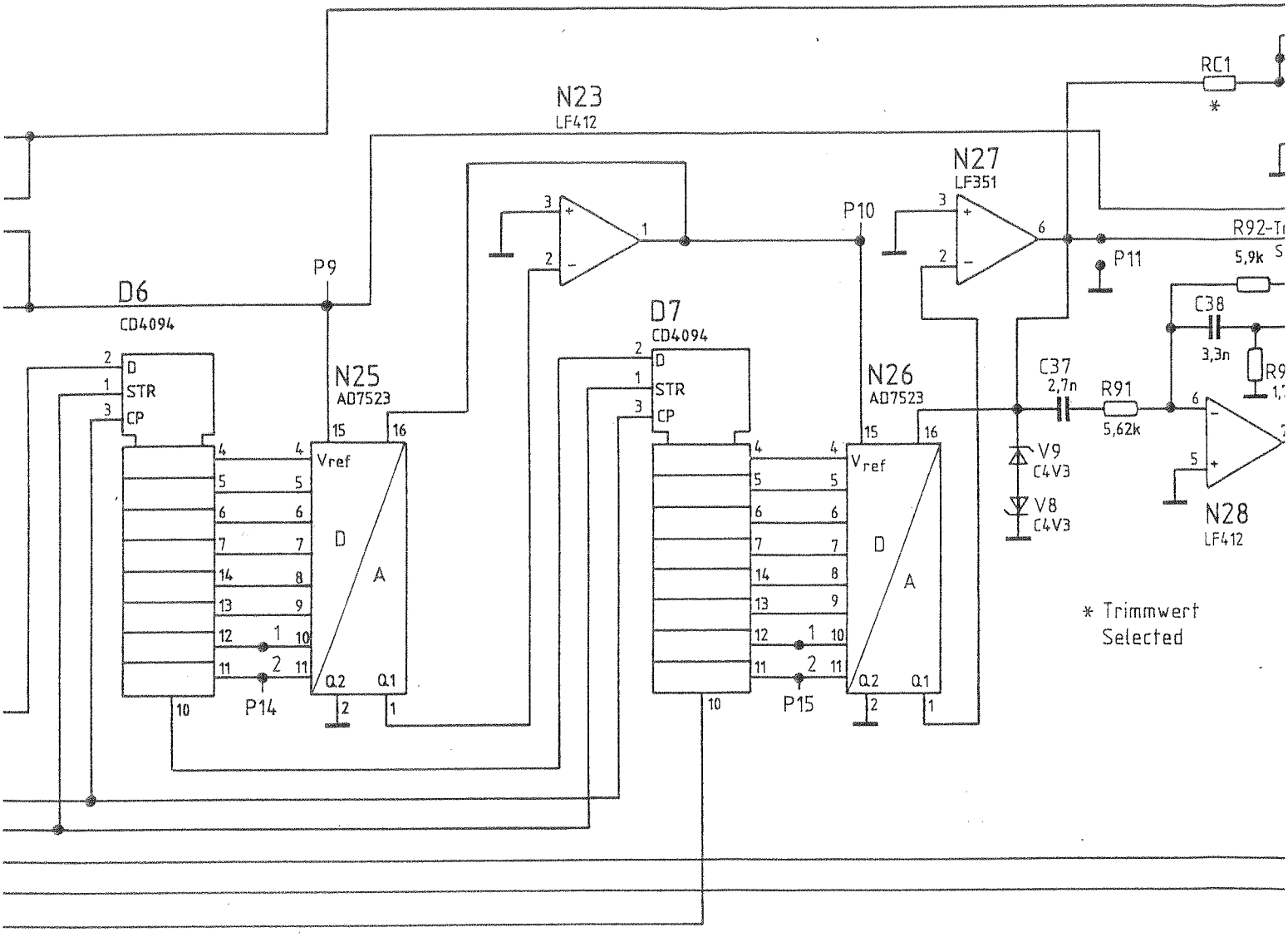

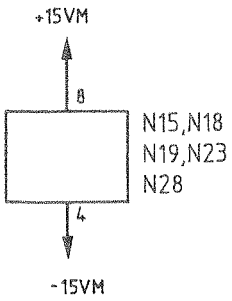

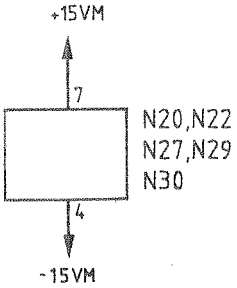

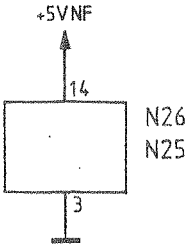

ROHDE & SCHWARZ

A		7.85	CO	D	35533	11.86	CO	1KSA	Tag
B	32954	11.85	CO	E	35547	05.87	IB	Bearb	7.85
C	35533	6.86	CO					Gepr	
Änd Zust	Änderungs-Mitteilung	Datum	Name	Änd Zust	Änderungs-Mitteilung	Datum	Name	Norm	

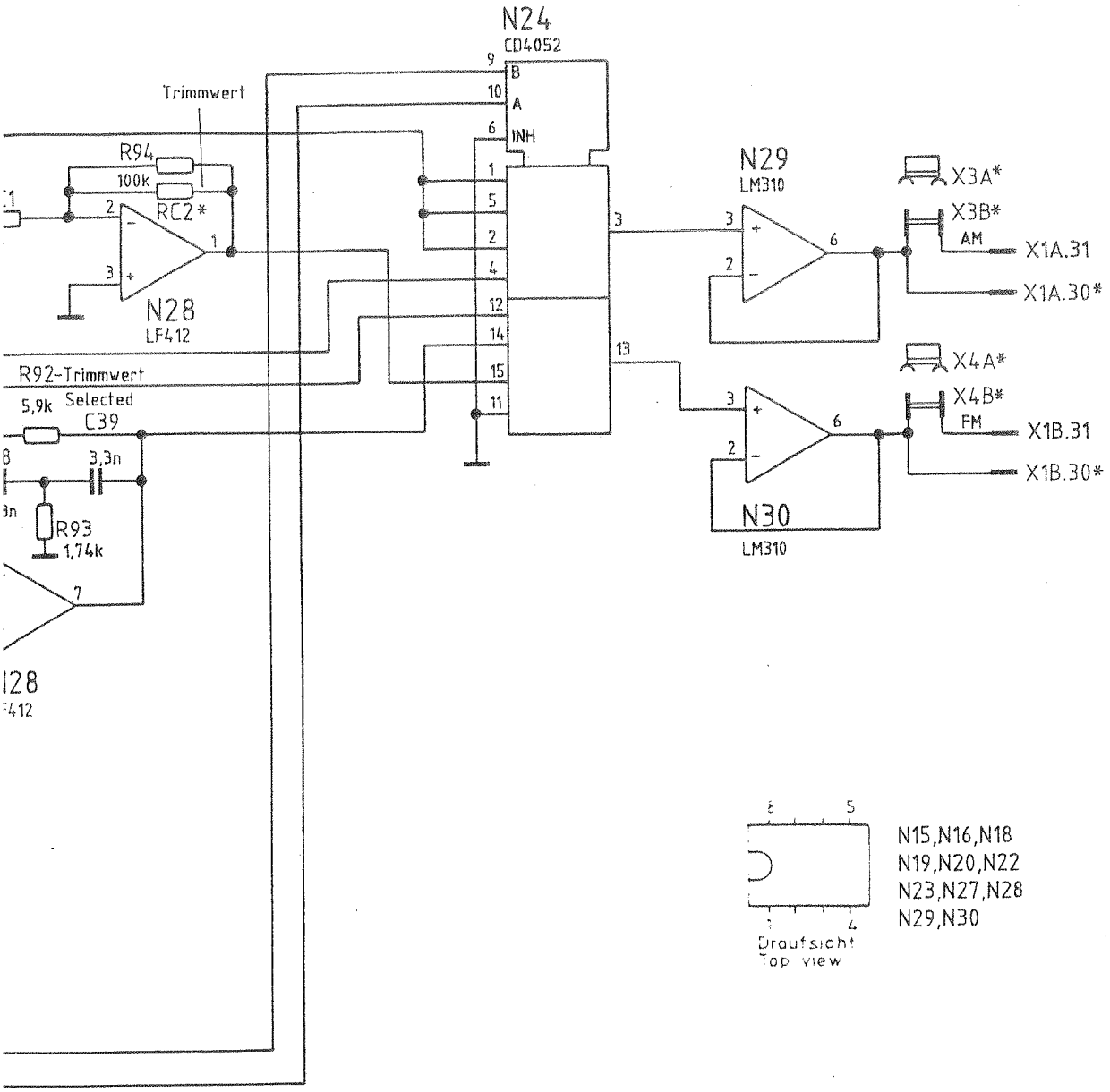

N15,N16,N18
N19,N20,N22
N23,N27,N28
N29,N30

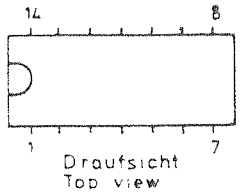

D6,D7,D8,D9
N17,N21,N24
N25,N26,N31

*) nur für VAR 04
only for model 04

Tag	Name	Benennung		Zeichn.-Nr
7.85	CO	1. Mod.-Generator / 1st Mod.-Generator	Z	802.5713 S
		zu Gerät CMT		reg. V 802.2020 V ersie Z

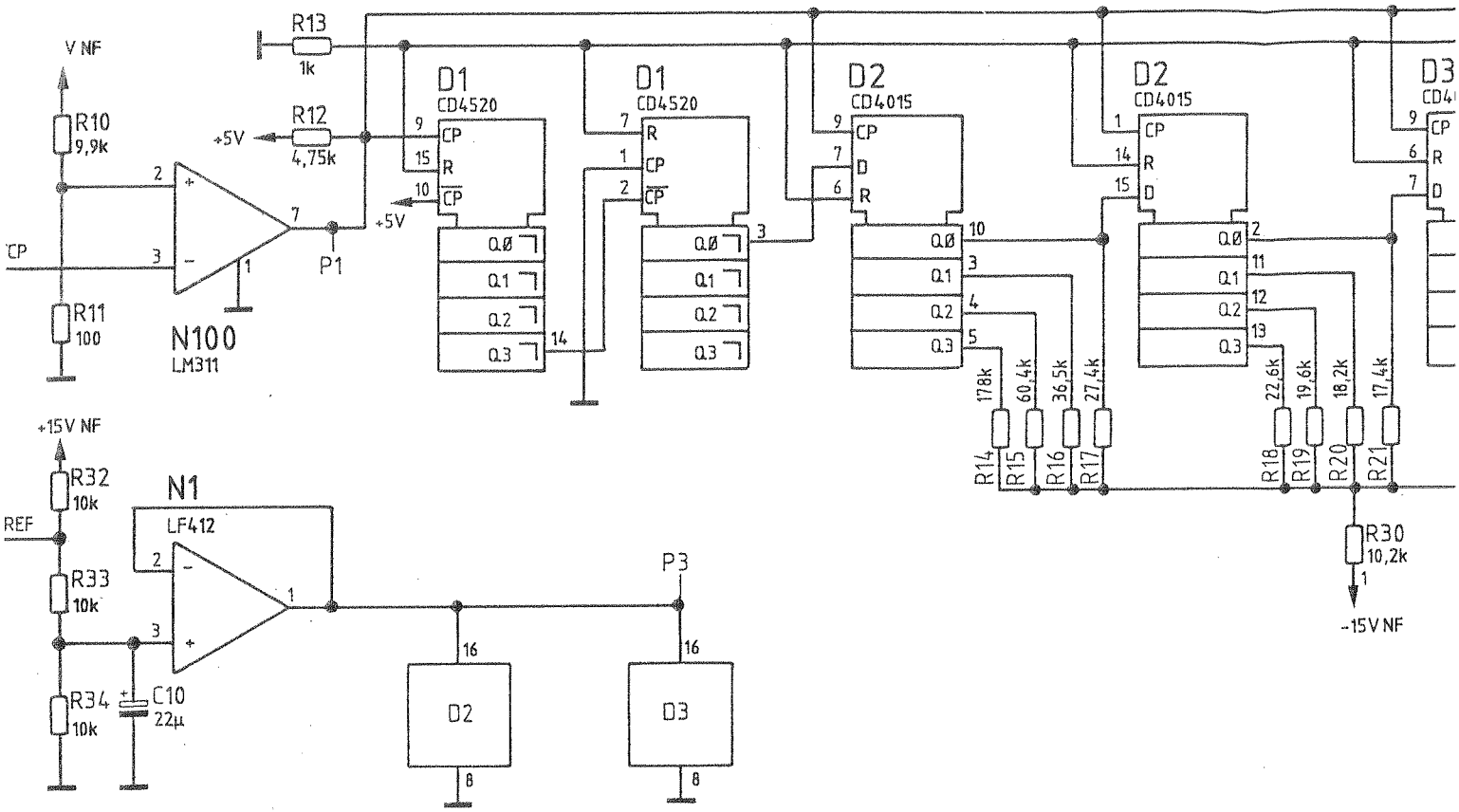
V NF
R10
9,9k
R11
100
CP
N100
LM311
R13
1k
R12
4,75k
+5V
P1
D1
CD4520
D2
CD4015
D3
CD4
Q.0
Q.1
Q.2
Q.3
178k
60,4k
36,5k
27,4k
22,6k
19,6k
18,2k
17,4k
R14
R15
R16
R17
R18
R19
R20
R21
R30
10,2k
-15V NF
+15V NF
R32
10k
REF
R33
10k
R34
10k
C10
22µ
N1
LF412
P3

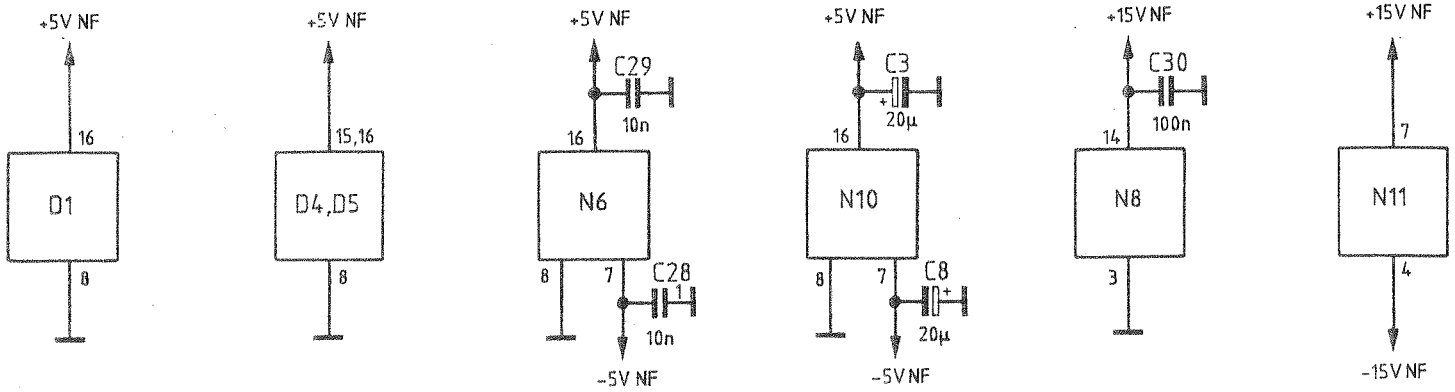
+5V NF
D1
D4,D5
C29
10n
N6
C28
10n
-5V NF
C3
20µ
N10
C8
20µ
+15V NF
C30
100n
N8
N11
-15V NF

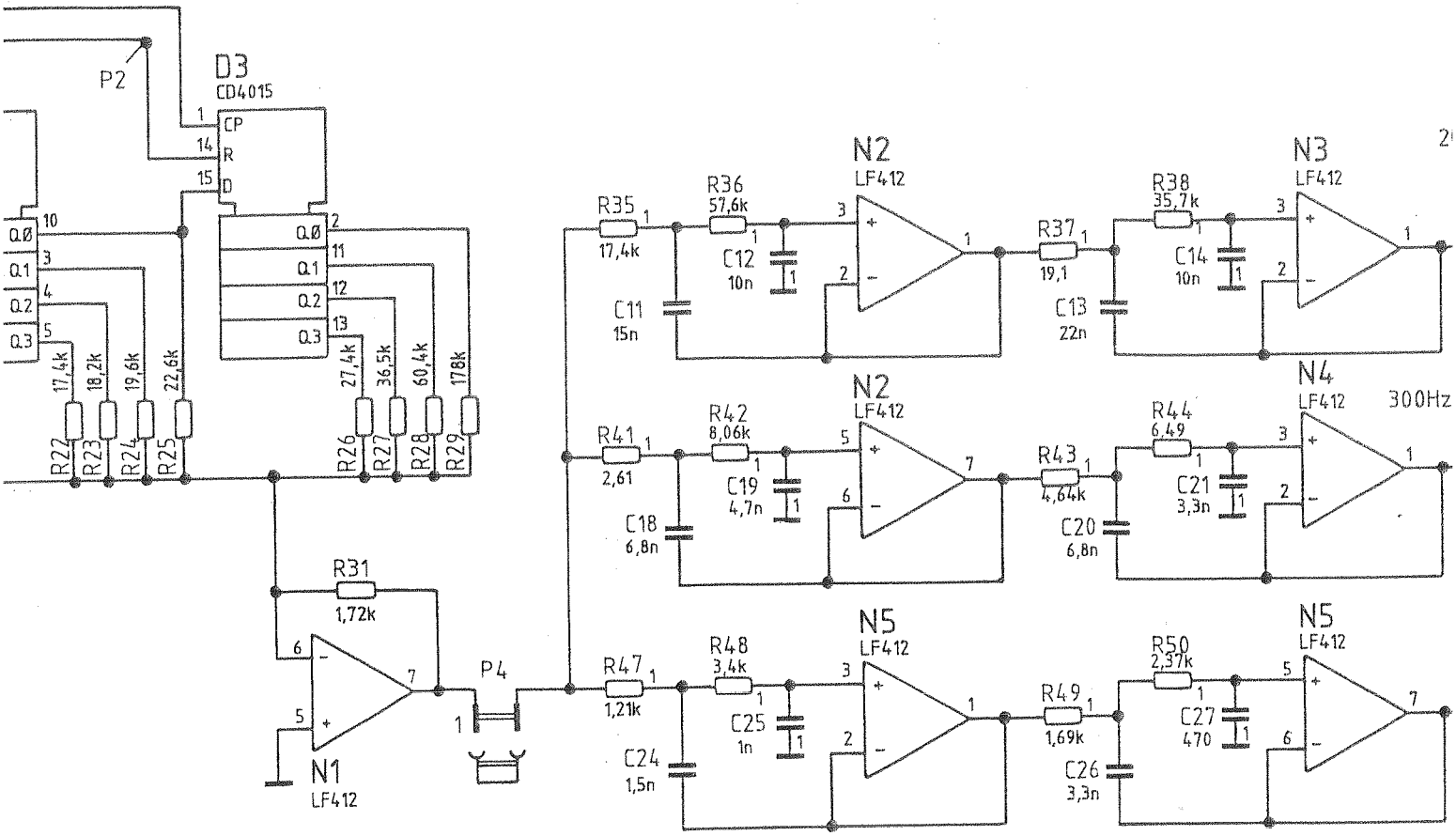

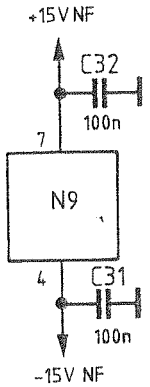

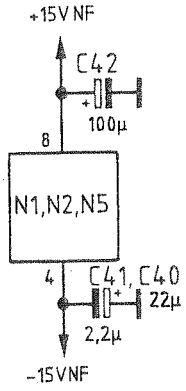

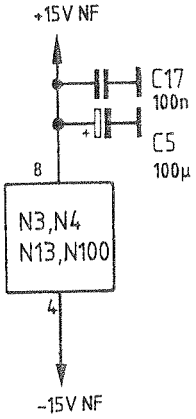

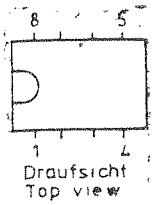

N1.....N5
N7,N9,N11
N12,N13

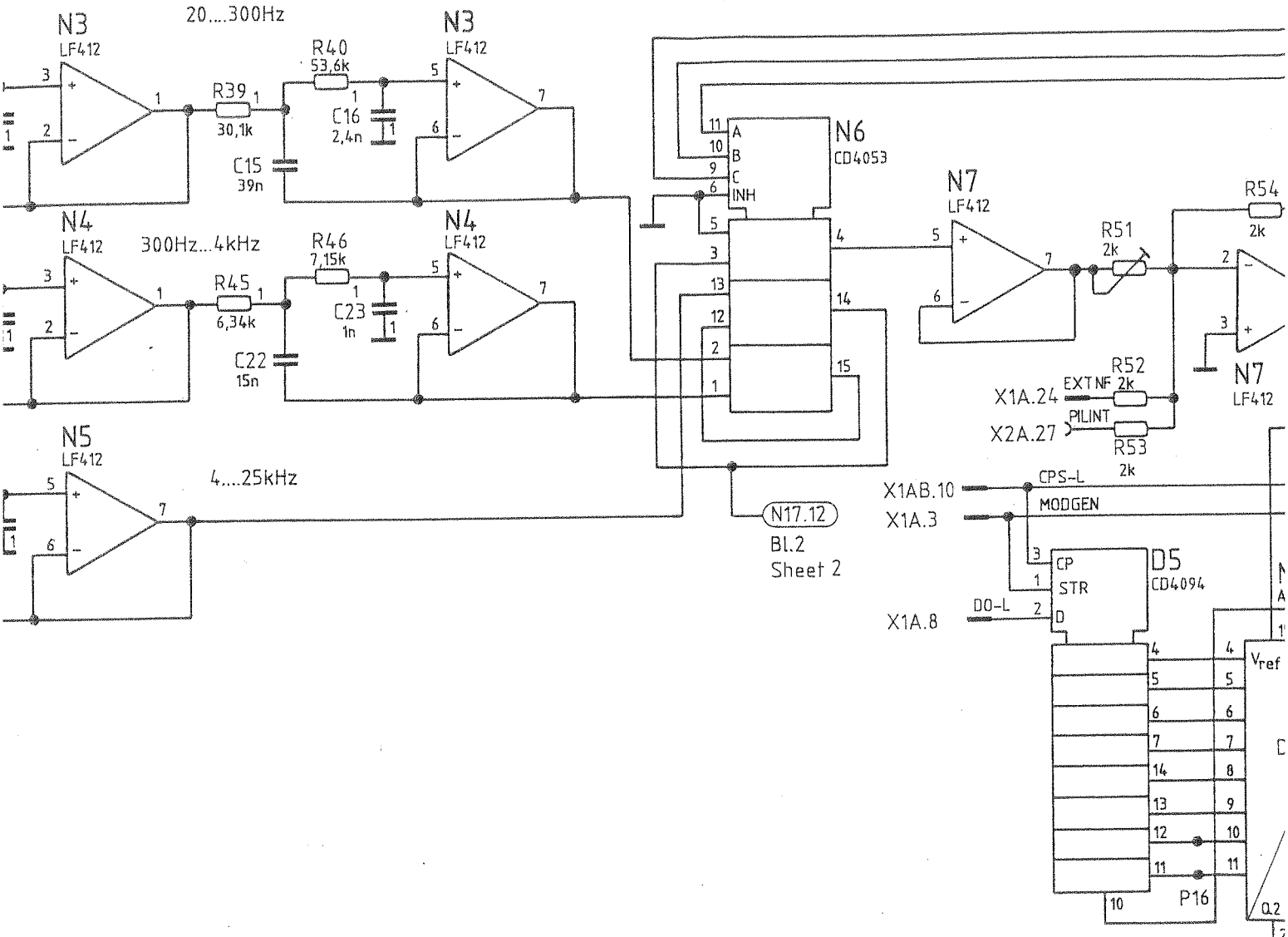

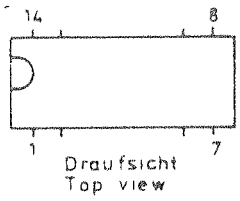

K14

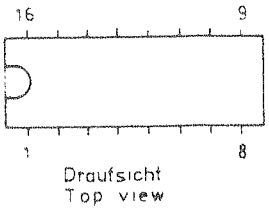

D1.....D5,N6,N8,N10

A		7.85	CO	E	35547	5.87	IB	1KSA	Tag
B	32954	4.86	CO					Bearb	7.85
D	35533	11.86	CO					Gepr	
Änd Zust	Änderungs-Mitteilung	Datum	Name	Änd Zust	Änderungs-Mitteilung	Datum	Name	Norm	

ROHDE & SCHWARZ

8 9 10

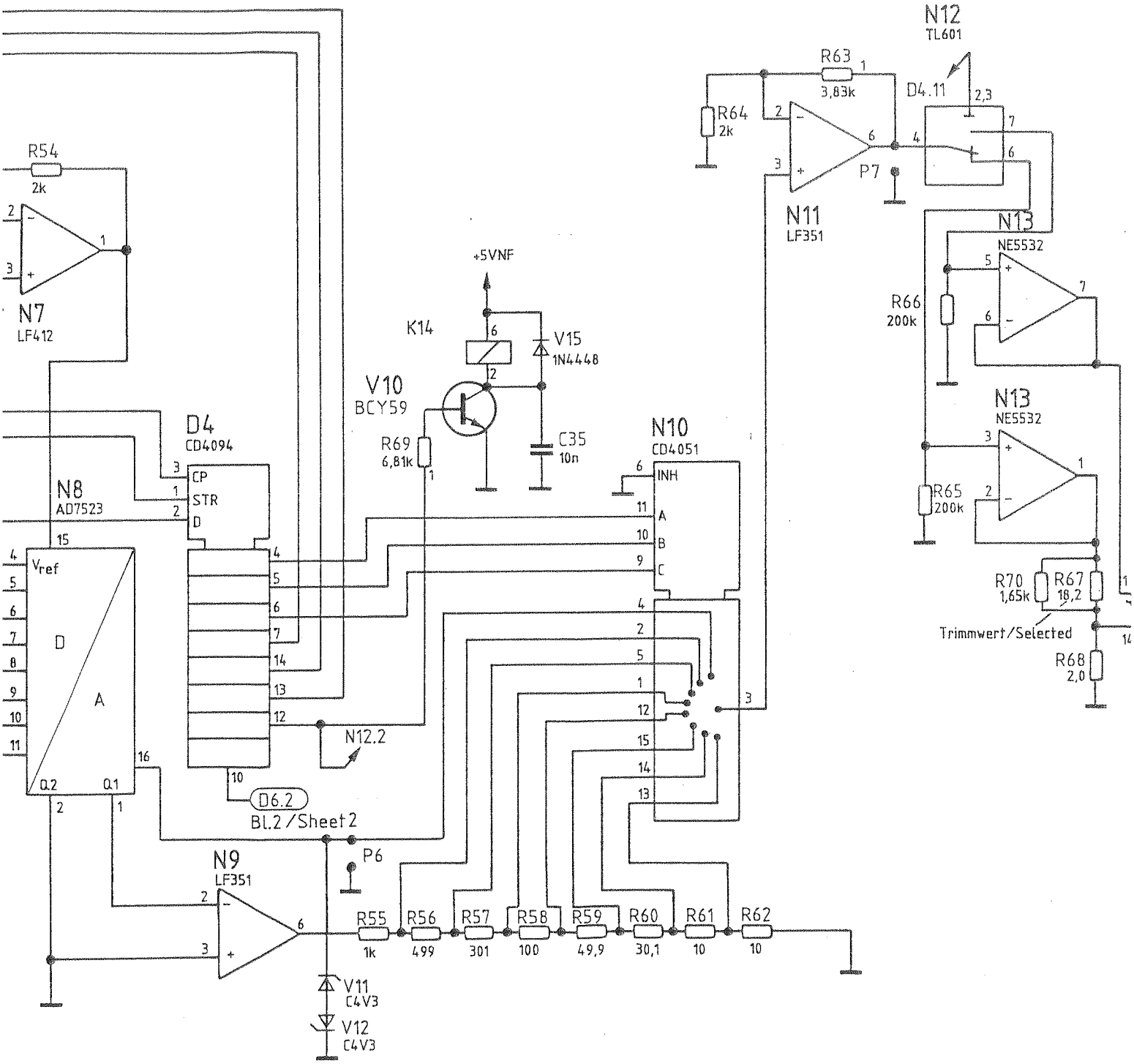

Stromlauf gilt für VAR 02, 04
Circuit diagram is valid for model 02, 04

Tag	Name	Benennung		Zeichn.-Nr
7.85	CO	1. MOD.-Generator / 1st MOD.-Generator	Z	802.5713 S
		zu Gerät CMT		reg. V 802.2020 V erste Z

11 12 13 14