ROHDE&SCHWARZ

SERVICE INSTRUCTIONS

RF Oscillator Module Including
Reference Oscillator Option (OCXO)
802.8835.02

Contents

Page

5 Service Manual for RF Oscillator Module Including Reference Oscillator Option (OCXO) 5.1

5.1 Function Description 5.1
5.1.1 Reference Section 5.1
5.1.2 VCXO Loop 5.2
5.1.3 RF Loop 5.3
5.1.4 Control and Diagnosis 5.4
5.2 Testing and Adjustment 5.6
5.2.1 Adjusting the 100-MHz Crystal Oscillator 5.6
5.2.2 Testing the Synchronization with an External 10-MHz Reference Frequency 5.6
5.2.3 Adjusting the Reference Oscillator Option (OCXO).. 5.6
5.2.4 Testing the VCXO Loop 5.7
5.2.5 Frequency Adjustment of the RF Oscillators 5.7
5.2.6 Testing the RF Loop 5.8
5.2.7 Testing the Spurious FM 5.8

5.3 Troubleshooting 5.9
5.3.1 DC Voltage Values 5.9
5.3.2 Signal Level 5.10
5.3.3 RF Level 5.10
5.3.4 Testing the Control Signals for the M Divider ... 5.11
5.3.5 Testing the Control Signals for the N Divider ... 5.11

5.4 Interfaces 5.12

Component lists
Circuit diagrams
Component layout diagrams

5 Service Manual for RF Oscillator Module Including Reference Oscillator Option (OCXO)

(See circuit diagram 802.8835 S and block diagram)

5.1 Function Description

The module contains a frequency synthesizer which delivers a frequency of 500 MHz to 1000 MHz with a resolution of 10 to 90 Hz. Two phase-locked loops are used for frequency synthesis. The individual loops are designated as RF loop and VCXO loop. The coarse spacing is generated in the RF loop and the fine spacing in the VCXO loop. The two phase-locked loops are synchronized with a crystal-stabilized reference frequency in order to obtain a stable output frequency. The output frequency is derived as follows:

$F=(M/N) \times 400000+M \times 200000$ where $M=2499$ to 4999
and $N=3333$ to 10000

If e.g. a frequency of 750 MHz is set, then M=3749 and N=7498.

A 100-MHz crystal oscillator generates the reference source for the frequency synthesis. All frequencies generated on the module are derived from this crystal oscillator. To obtain even greater stability, this crystal oscillator can be synchronized in a phase-locked loop with an external 10-MHz reference or an oven-stabilized 10-MHz crystal (option OXCO).

5.1.1 Reference Section

The tuning diode V512 is connected in series with the crystal (B500) in the 100-MHz crystal oscillator. The frequency can be adjusted within a small range using a tuning voltage which is adjustable with trimmer R632.

The oscillator frequency divided by 10 is compared with the 10-MHz signal of the external reference or the OCXO in the digital phase detector (D610) to bring it into synchronism. The pulses generated by the phase detector are integrated by a difference integrator (N620) into a DC voltage which is applied to the voltage-variable diode V512 as a tuning voltage. The tuning voltage is controlled such that the two 10-MHz signals at the phase detector always have the same phase. Switchover from self-oscillating to synchronized operation of the 100-MHz crystal oscillator takes place automatically when using the option (OCXO).

5.1.2 VCXO Loop

The 20-MHz signal from the reference unit is converted in the amplifier (V200) from ECL to TTL level and applied to the programmable N divider.

The N divider is a decadic counter with 4 digits. The counter is incremented with each clock pulse. The preset input of the individual counters is activated via the NAND gate (D202/2) when a count of 9999 is reached and the N divider is reset by the next clock pulse. Because a clock pulse is needed for loading the counter, it counts one step more than 9999. The required divider ratio at the output of the divider is therefore 10000 minus the initial count. If e.g. the divider ratio is to be N = 7498, (10000-7498) = 2502 must be loaded into the counter. This value is stored in BCD in the shift registers (D205, D206). The output signal of the N divider (2 to 6 kHz) is then mixed in the subsequent phase locked mixer to 10.002 to 10.006 MHz.

The voltage-controlled crystal oscillator (VCXO) consists of the oscillating transistor V230 and the resonant circuit elements B230, V232, L230, C232 and C233. The voltage-variable diode V232 enables the frequency to be tuned in the range from 10.002 MHz to 10.006 MHz. The oscillator signal is converted into a TTL level by D250. The output of D250 pin 10 is used to drive the divider D255 (100:1). The signal is applied from pin 1 of D250 to an active mixer D262 where it is converted down with 10 MHz from the reference section. The low intermediate frequency is applied via the lowpass filter R264, C264, R265, C265 to the comparator N260 which converts the signal to TTL level for the digital phase detector.

The phase detector, consisting of D210 and D202/4, compares the phase at pins 12 and 9. The signal at pin 12 is the output frequency of the N divider. The phase detector generates positive pulses at pin 5 if the frequency at pin 9 is higher than that at pin 12. These pulses cause the tuning voltage to drop following the inverting integrator N220 in order to reestablish synchronization. If the phase-locked loop has locked, only very narrow pulses are present at pins 2 and 5 of phase detector D210.

5.1.3 RF Loop

The output frequency range from 500 to 1000 MHz is generated in the RF loop. This range is divided amongst three oscillators.

Range in MHz		Transistor
Osc. 1	500 to 655	V30
Osc. 2	655 to 825	V60
Osc. 3	825 to 1000	V90

With negative impedance at its base, the oscillating transistor reduces the damping of a series resonant circuit. The inductance of the resonant circuit is generated using a coaxial cable in order to keep the microphony as low as possible. A voltage-variable diode is used for the tuning. The tuning voltage is applied to the cathode and the FM signal to the anode of the voltage-variable diode via RF chokes. The output power of the oscillator is set by the oscillating transistor using the adjustable constant current. A switching stage with two transistors driven at TTL level switches on the operating voltage for the oscillator as well as a switching diode to decouple the RF in the forward direction. The decoupling amplifier (V158) increases the output power of the oscillators from 0 dBm to 10 dBm. Following the decoupling amplifier, the signal is applied via an attenuator pad (R160, R161) to output connector X310 and via a second pad (R164, R165) and a hybrid amplifier (N300) to the M divider.

The M divider is a programmable high-frequency divider with a fixed divider (D310) and a selectable divider (D315). D310 divides the oscillator frequency by 4 down to between 125 and 250 MHz. D315 with the internal selector 11/10 operates together with auxiliary counter (D330) as a decadic counter stage in the 4-digit M divider.

D315 commences with the divider ratio of 11:1. The counters (D330 and D331) are incremented simultaneously after 11 input pulses. Once 9 has been reached on the auxiliary counter (D330), it switches the divider (D315) to a ratio 10:1. The auxiliary counter remains at its final value. The pulses divided by 10:1 are then only counted by the main counter (D331, D332 and D333). Once the main counter has also reached 9, the divider is again set to 11:1 by a reset pulse and the other dividers are set to the entered ratio. A new counting cycle can then commence. For example, if the dividing factor is 2654, the auxiliary counter and the main counter count 4 pulses and then the divider is switched from 11 to 10. The divider divides the input frequency by 10 for the remaining factor of the main counter (=261). The input frequency must deliver 4 x 11+(265-4) x 10 = 2654 pulses for the complete counting cycle; this corresponds to the above dividing factor.

The M divider must be loaded with the difference between the final count and the dividing factor because it counts upwards. Ten additional input pulses are used because the loading of the counters requires 1 clock pulse and the divider is set to a factor of 10 during this period. For example, if the divider ratio is to be M = 2654, then (10009-2654)=7355 must be loaded into the counter. This value is stored in BCD code in the shift registers (D360 and D365).

With FM switched off, the output signal of the M divider (approx. 50 kHz) is directly applied to the phase detector (D390) via a gate (D371). The phase detector compares this signal with the frequency of the VCXO loop divided by 200 and readjusts the RF oscillator using the subsequent integrator (N400) if there is a difference in phase. If FM is switched on, the control bandwidth should be small to enable frequency modulation with low modulation frequencies. This is achieved by switching over the integrator time constants and reducing the phase detector current. Furthermore, the input frequency of the phase detector is divided by 5 using divider (D370).

5.1.4 Control and Diagnosis

The module is controlled via a serial interface. The data for a complete setting are stored in 6 shift register ICs (D360, D365, D205, D206, D2, D18).

Eight different test points on the module can be polled by the multiplexer (D15) for diagnostic purposes. The tuning voltages of the oscillators are also constantly monitored by window discriminators (N240, N440, N660) and the loop-OK line is set to Low if the limits are violated.

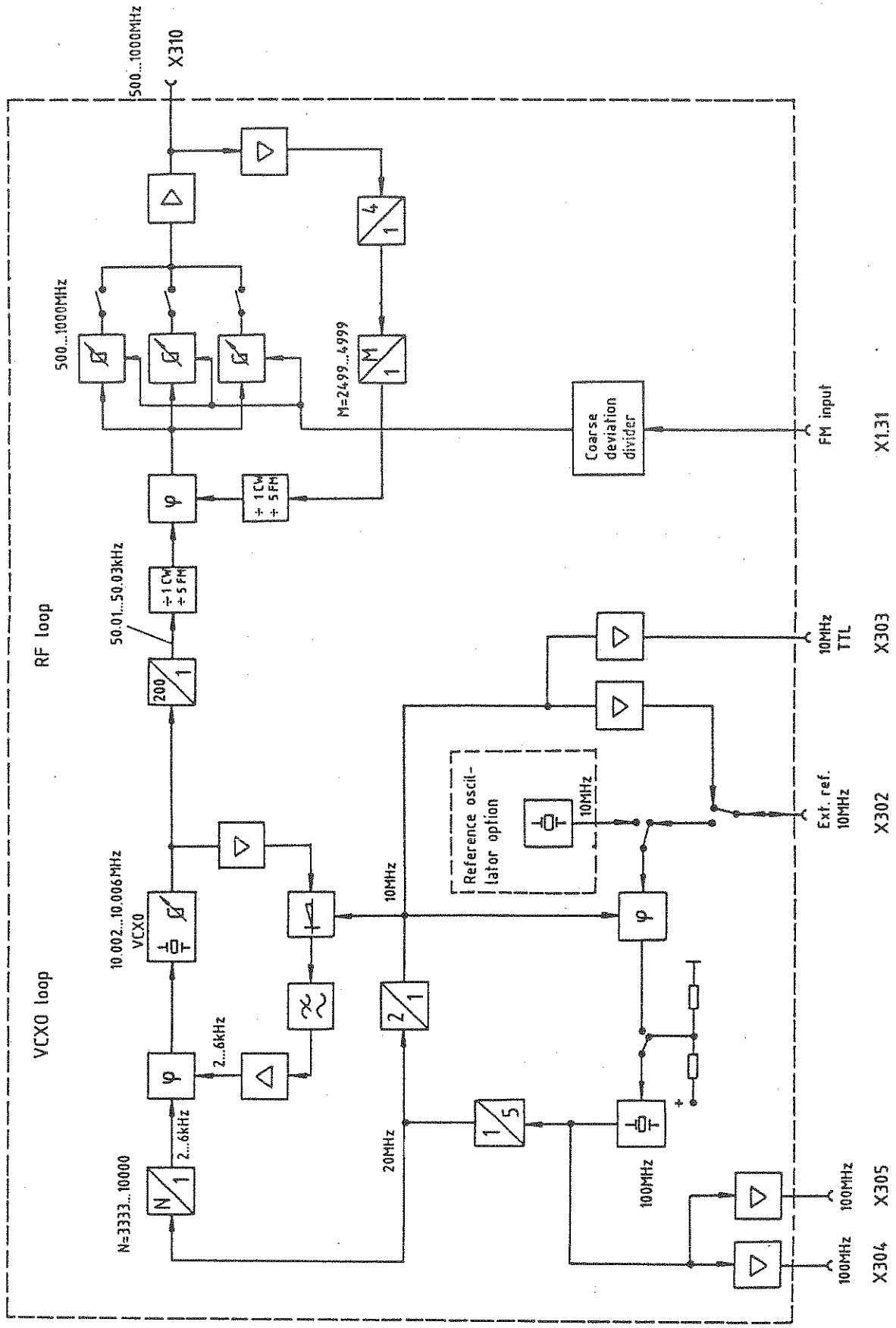

Fig. 5-1 Block diagram of the RF oscillator

5.2 Testing and Adjustment

5.2.1 Adjusting the 100-MHz Crystal Oscillator

→ Plug the module onto the service adapter (included in service kit). Remove the OCXO option if fitted.

→ Connect a voltmeter to anode V506. Adjust the voltage for minimum (9.5 to 11.2 V) using L500.

→ Connect a voltmeter to X11 (jumper X11 remains inserted) and a frequency counter to RF connector X304. Set the frequency to 100 MHz ±100 Hz using trimmer R632. The voltage at X11 is to be 8 ±1.5 V. Change L512 to 0.18 µH if the voltage is too high and to 0.27 µH if the voltage is too low (trimming value).

→ Carry out the fine adjustment with the module closed. Adjust the frequency to 100 MHz ±50 Hz using trimmer R632.

5.2.2 Testing the Synchronization with an External 10-MHz Reference Frequency

→ Set instrument to "External reference frequency".

→ Connect frequency counter to RF connection X304.

→ Apply a frequency of 10 MHz with a level of -7 dBm to connector REF 10 MHz. Operate the signal generator and the frequency counter with the same reference frequency. The output frequency at X304 must change from 99.99995 MHz to 100.0005 MHz when the input frequency changes from 9.999995 MHz to 10.005 MHz.

5.2.3 Adjusting the Reference Oscillator Option (OCXO)

→ Set instrument to "Internal reference frequency".

→ Wait 15 minutes for instrument to warm up.

→ Connect calibrated frequency counter to X304.

→ Adjust the frequency to 100 MHz ±5 Hz using trimmer "REF. FREQ. OPTION".

5.2.4 Testing the VCXO Loop

a) Instrument setting: frequency 500.1 MHz.

→ The tuning voltage at X6 must be > 3 V.
→ The frequency at X3 must be 10.002 MHz.

b) Instrument setting: frequency 500.3 MHz.

→ The tuning voltage at X6 must be > 12 V.
→ The frequency at X3 must be 10.006 MHz.

5.2.5 Frequency Adjustment of the RF Oscillators

→ Apply a DC voltage of 2 V ±0.1 V to X9/2 and 3.

→ Connect an RF analyzer or a frequency counter to RF connection X310.

→ Set trimmers R49, R79, R109 to maximum current.

→ Adjust the frequency according to the following table using trimmers C21, C51 and C81:

Instrument setting	Frequency at X310	Trimmer
520 MHz	500 MHz ± 5 MHz	C21
700 MHz	655 MHz ± 5 MHz	C51
900 MHz	825 MHz ± 5 MHz	C81

5.2.6 Testing the RF Loop

→ Connect a frequency counter and a power meter to RF connection X310. Check the level and the frequency with the following instrument settings.

→ Frequency setting on instrument: 501 MHz
654 MHz
656 MHz
824 MHz
826 MHz
1000 MHz

→ The frequency must agree with the setting.

→ The level must be 0 dBm ±3 dB.

→ The tuning voltage at X9 must be between 2 and 20 V.

5.2.7 Testing the Spurious FM

Test the spurious FM with the module closed.

→ Connect modulation analyzer to RF connection X310.

→ Set various frequencies between 500 and 1000 MHz on the instrument and measure the spurious FM.

→ The spurious FM (weighted to CCITT, RMS) must be < 8 Hz.

5.3 Troubleshooting

Troubleshooting can be readily carried out using the DC voltages and signal levels specified. The inductors L30, L60 and L90 must be checked if the RF oscillators have a high microphony sensitivity. The inductors must be positively adhered to the circuit board.

5.3.1 DC Voltage Values

Source V500	1.5 V ±0.5 V
Emitter V540	2.2 V ±0.3 V
N520/pin 11	3.8 V ±0.5 V
N570/pin 11	3.8 V ±0.5 V
Emitter V230	6.8 V ±1 V
D260/pin 6	8.6 V ±1 V
N400/pin 3	2.5 V ±0.3 V
Emitter V30, V60, V90	-9 V ±1.5 V
Collector V158	6.5 V ±1 V

5.3.2 Signal Level

N520/pin 7	100 MHz	ECL
N580/pin 7	10 MHz	TTL
D202/pin 3	20 MHz	TTL
P1	2 to 6 kHz	TTL
P2	2 to 6 kHz	TTL
X3	10,002 to 10,006 MHz	approx. 4 V_{pp}
X7	10 MHz	approx. 30 mV_{pp}
N260/pin 3	2 to 6 kHz	50 to 150 mV_{pp}
X8	50 kHz	TTL
P3,P4	50 kHz (10 kHz with FM)	TTL

5.3.3 RF Level

The RF levels have been measured using a 500-Ω probe.

P5	500 to 655 MHz	-12 to -3 dBm
P6	655 to 825 MHz	-10 to 0 dBm
P7	825 to 1000 MHz	-12 to -5 dBm
P8	500 to 1000 MHz	+5 to +10 dBm
P9	500 to 1000 MHz	-4 to +5 dBm
P10	500 to 1000 MHz	-12 to -5 dBm
P11	500 to 1000 MHz	-6 to +2 dBm
P12	125 to 250 MHz	+4 to +9 dBm

5.3.4. Testing the Control Signals for the M Divider

Frequency setting on instrument (MHz)	Control signals at D365								Control signals at D360							
	11	12	13	14	7	6	5	4	11	12	13	14	7	6	5	4
802	Ø	1	1	Ø	Ø	Ø	Ø	Ø	Ø	Ø	Ø	Ø	Ø	Ø	Ø	Ø
801.8	Ø	1	1	Ø	Ø	Ø	Ø	Ø	Ø	Ø	Ø	Ø	Ø	Ø	Ø	1
801.6	Ø	1	1	Ø	Ø	Ø	Ø	Ø	Ø	Ø	Ø	Ø	Ø	Ø	1	Ø
801.2	Ø	1	1	Ø	Ø	Ø	Ø	Ø	Ø	Ø	Ø	Ø	Ø	1	Ø	Ø
800.4	Ø	1	1	Ø	Ø	Ø	Ø	Ø	Ø	Ø	Ø	Ø	1	Ø	Ø	Ø
800	Ø	1	1	Ø	Ø	Ø	Ø	Ø	Ø	Ø	Ø	1	Ø	Ø	Ø	Ø
798	Ø	1	1	Ø	Ø	Ø	Ø	Ø	Ø	Ø	1	Ø	Ø	Ø	Ø	Ø
794	Ø	1	1	Ø	Ø	Ø	Ø	Ø	Ø	1	Ø	Ø	Ø	Ø	Ø	Ø
786	Ø	1	1	Ø	Ø	Ø	Ø	Ø	1	Ø	Ø	Ø	Ø	Ø	Ø	Ø
782	Ø	1	1	Ø	Ø	Ø	Ø	1	Ø	Ø	Ø	Ø	Ø	Ø	Ø	Ø
762	Ø	1	1	Ø	Ø	Ø	1	Ø	Ø	Ø	Ø	Ø	Ø	Ø	Ø	Ø
722	Ø	1	1	Ø	Ø	1	Ø	Ø	Ø	Ø	Ø	Ø	Ø	Ø	Ø	Ø
642	Ø	1	1	Ø	1	Ø	Ø	Ø	Ø	Ø	Ø	Ø	Ø	Ø	Ø	Ø
842	Ø	1	Ø	1	1	Ø	Ø	Ø	Ø	Ø	Ø	Ø	Ø	Ø	Ø	Ø

5.3.5 Testing the Control Signals for the N Divider

Frequency setting on instrument (MHz)	Control signals at D206								Control signals at D205							
	11	12	13	14	7	6	5	4	11	12	13	14	7	6	5	4
500.1	Ø	Ø	Ø	Ø	Ø	Ø	Ø	Ø	Ø	Ø	Ø	Ø	Ø	Ø	Ø	Ø
500.6002	Ø	1	Ø	1	Ø	Ø	Ø	Ø	Ø	Ø	Ø	Ø	Ø	Ø	Ø	1
1000	Ø	Ø	Ø	Ø	Ø	Ø	Ø	Ø	Ø	Ø	Ø	Ø	Ø	Ø	1	Ø
999.8	Ø	Ø	Ø	Ø	Ø	Ø	Ø	Ø	Ø	Ø	Ø	Ø	Ø	1	Ø	Ø
999.4	Ø	Ø	Ø	Ø	Ø	Ø	Ø	Ø	Ø	Ø	Ø	Ø	1	Ø	Ø	Ø
999.2	Ø	Ø	Ø	Ø	Ø	Ø	Ø	Ø	Ø	Ø	Ø	1	Ø	Ø	Ø	Ø
998.2	Ø	Ø	Ø	Ø	Ø	Ø	Ø	Ø	Ø	Ø	1	Ø	Ø	Ø	Ø	Ø
996.2	Ø	Ø	Ø	Ø	Ø	Ø	Ø	Ø	Ø	1	Ø	Ø	Ø	Ø	Ø	Ø
992.2	Ø	Ø	Ø	Ø	Ø	Ø	Ø	Ø	1	Ø	Ø	Ø	Ø	Ø	Ø	Ø
990.2	Ø	Ø	Ø	Ø	Ø	Ø	Ø	1	Ø	Ø	Ø	Ø	Ø	Ø	Ø	Ø
980.2	Ø	Ø	Ø	Ø	Ø	Ø	1	Ø	Ø	Ø	Ø	Ø	Ø	Ø	Ø	Ø
960.2	Ø	Ø	Ø	Ø	Ø	1	Ø	Ø	Ø	Ø	Ø	Ø	Ø	Ø	Ø	Ø
920.2	Ø	Ø	Ø	Ø	1	Ø	Ø	Ø	Ø	Ø	Ø	Ø	Ø	Ø	Ø	Ø
900.2	Ø	Ø	Ø	1	Ø	Ø	Ø	Ø	Ø	Ø	Ø	Ø	Ø	Ø	Ø	Ø
800.2	Ø	Ø	1	Ø	Ø	Ø	Ø	Ø	Ø	Ø	Ø	Ø	Ø	Ø	Ø	Ø
600.2	Ø	1	Ø	Ø	Ø	Ø	Ø	Ø	Ø	Ø	Ø	Ø	Ø	Ø	Ø	Ø

5.4 Interfaces

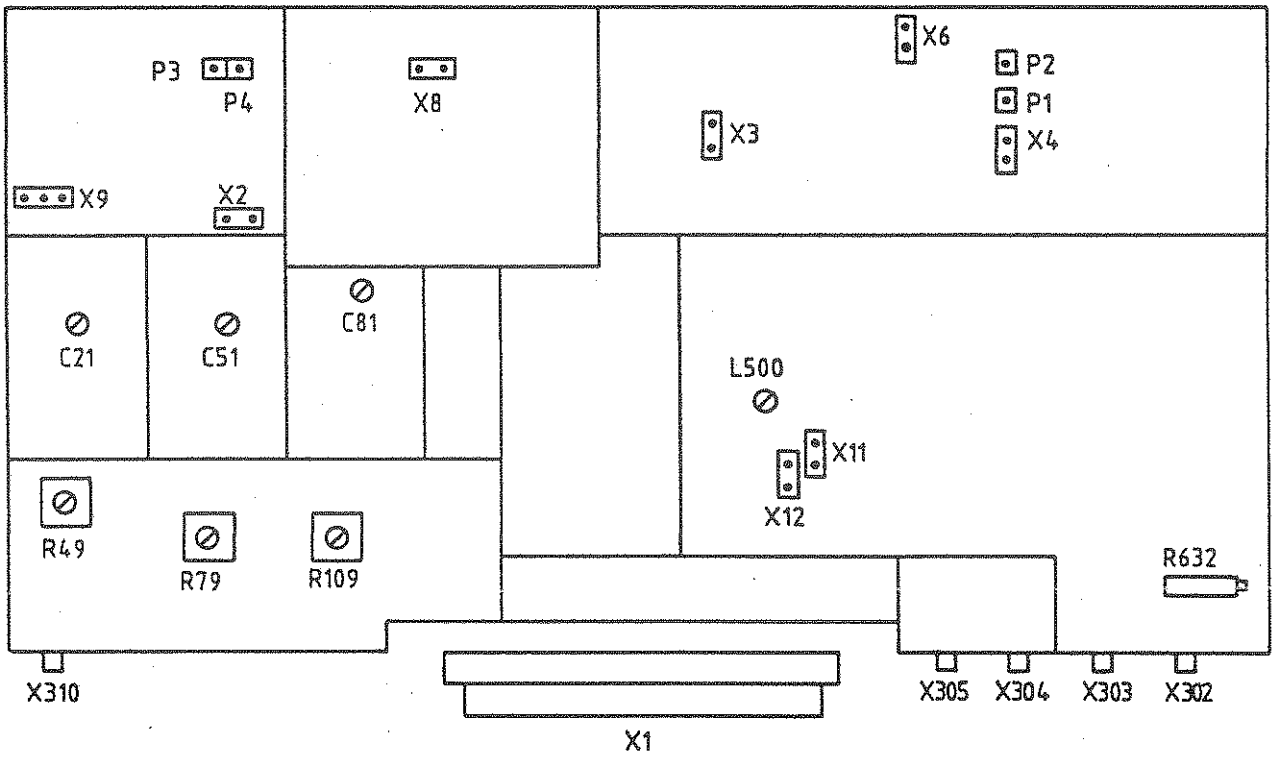

Bild 5-2 Location of the inputs/outputs and trimmers

Terminal	Designation	Frequency	Level
X302	REF.INT/EXT	10 MHz	0 dBm ±3 dB
X303	10-MHz clock	10 MHz	TTL
X304	100-MHz ref.	100 MHz	0 dBm ±3 dB
X305	100 MHz LO	100 MHz	0 dBm ±3 dB
X310	RF output	500 to 1000 MHz	0 dBm ±3 dB
X1.3	Loop OK	DC	0 to +5 V
X1.23	Test	DC	0 to +5 V
X1.31	FM input	50 Hz to 100 kHz	0 to 1 V_{rms}

Serial interface

X1.6	Strobe
X1.8	Data
X1.10	Clock

ROHDE & SCHWARZ
MÜNCHEN

Schaltteillisten
Stromläufe
Bestückungspläne

Parts lists
Circuit diagrams
Components plans

R 29500 Bl. 2

ROHDE&SCHWARZ	ÄZ 04	Datum Date 1087	Schaltteilliste für Parts list for ED HF-OSZILLATOR	Sachnummer Stock Nr. 802.8835.01 SA	Blatt Page 1

Kennzeichen Component No.	Benennung/Beschreibung Designation	Sachnummer Stock No.	enthalten in contained in
B230	EQ 10,006 MHZCL30HC49-1D3 QUARTZ CRYSTAL UNIT QUARZKERAM N. R&S SACHNUMMER	EQ 090.2366	
B500	EQ 100,000MHZ (5.)HC-43/U NUR VAR : 02 QUARTZ CRYSTAL UNIT QUARZKERAM N. R&S SACHNUMMER	EQ 950.6346	
B500	BD QUARZ MIT THERMOSTAT NUR VAR : 04	802.7145	
C3	CC 10NF-20+50%7X8R4000 CAPACITOR VALVO 2222 63051 64051103	CC 087.7525	
C4	CC 10NF-20+50%7X8R4000 CAPACITOR VALVO 2222 63051 64051103	CC 087.7525	
C6	CC 470PF+-5%50V NPO 1206 CERAMIC CHIP CAPACITOR VITRAMON VJ1206A471JFA	CC 099.8515	
C9	CC 22PF+-5%50V NPO 1206 CERAMIC CHIP CAPACITOR VITRAMON VJ1206A220JFA	CC 099.8396	
C10	CK 100NF+-5%63V5RM MKT CAPACITOR WIMA MKS/2/63/0,1UF/5%	CK 099.2930	
C11	CK 100NF+-5%63V5RM MKT CAPACITOR WIMA MKS/2/63/0,1UF/5%	CK 099.2930	
C12	CE 10 UF+-20%25V 7X 5X11 ELECTROLYTIC CAPACITOR ROEDERSTEI ETR 3 10/25 20%	CE 023.5980	
C13	CC 22PF+-5%50V NPO 1206 CERAMIC CHIP CAPACITOR VITRAMON VJ1206A220JFA	CC 099.8396	
C15	CC 470PF+-10%3X4R2000 CAPACITOR VALVO 2222 63051 471	CC 087.6993	
C16	CC 100PF+-5%50V NPO 1206 CERAMIC CHIP CAPACITOR VITRAMON VJ1206A101JFA	CC 099.8415	
C17	CC 10NF-20+50%7X8R4000 CAPACITOR VALVO 2222 63051 64051103	CC 087.7525	
C18	CC 10NF-20+50%7X8R4000 CAPACITOR VALVO 2222 63051 64051103	CC 087.7525	
C19	CC 47PF+-2%5X6NPO CAPACITOR VALVO 2222 678 10479	CC 087.6506	
C20	CC 47PF+-5550V COG 1206 CERAMIC CHIP CAPACITOR VITRAMON VJ1206A470JFA	CC 099.8496	
C21	CT 13PF 7RDX13TK50 250V TRIMMER TEKELEC LUFTTRAT5400	CT 450.7283	

ROHDE&SCHWARZ	ÄZ	Datum Date	Schaltteiliste für Parts list for	Sachnummer Stock Nr.	Blatt Page
	04	1087	ED HF-OSZILLATOR	802.8835.01 SA	2

Kennzeichen Component No.	Benennung/Beschreibung Designation	Sachnummer Stock No.	enthalten in contained in
C22	CC 270PF+-5%50V NPO 1206 CERAMIC CHIP CAPACITOR VITRAMON VJ1206A271JFA	CC 099.8867	
C23	CC 270PF+-5%50V NPO 1206 CERAMIC CHIP CAPACITOR VITRAMON VJ1206A271JFA	CC 099.8867	
C24	CC 47PF+-5550V COG 1206 CERAMIC CHIP CAPACITOR VITRAMON VJ1206A470JFA	CC 099.8496	
C27	CC 6PF+-0,5PF50V NPO CERAMIC CHIP CAPACITOR VITRAMON VJ1206A6RODFA	CC 099.8709	
C29	CC 10PF+-0,5PF50VNPO 1206 CERAMIC CHIP CAPACITOR VITRAMON VJ1206A100DFA	CC 099.8480	
C30	CC 6PF+-0,5PF50V NPO CERAMIC CHIP CAPACITOR VITRAMON VJ1206A6RODFA	CC 099.8709	
C31	CC 8PF+-0,5PF50V NPO 1206 CERAMIC CHIP CAPACITOR VITRAMON VJ1206A8RODFA	CC 099.8721	
C33	CC 8PF+-0,5PF50V NPO 1206 CERAMIC CHIP CAPACITOR VITRAMON VJ1206A8RODFA	CC 099.8721	
C34	CC 22PF+-5%50V NPO 1206 CERAMIC CHIP CAPACITOR VITRAMON VJ1206A220JFA	CC 099.8396	
C35	CC 10NF-20+50%7X8R4000 CAPACITOR VALVO 2222 63051 64051103	CC 087.7525	
C38	CC 330PF+-10%3X4R2000 CAPACITOR VALVO 2222 63051 331	CC 087.6970	
C40	CC 4,7NF+-10%6X9R2000 CAPACITOR VALVO 2222 63051 472	CC 087.7102	
C41	CE 4,7UF+-20%20V 7X 4X 8 ELECTROLYTIC CAPACITOR ROEDERSTEI ETR 2 4,7/20 20%	CE 022.8110	
C48	CE 1,0UF+-20%35V 5X 4X 7 ELECTROLYTIC CAPACITOR ROEDERSTEI ETR 1 1/40 20%	CE 022.8185	
C49	CC 1NF+-10%63V K2000 CERAMIC CAPACITOR VALVO 2222 63051 102	CC 022.0784	
C50	CE 47UF-10+50% 40V 9X13 ELECTROLYTIC CAPACITOR ROEDERST EK 00 CB 247 G	CE 006.7142	
C51	CT 9,2PF TAUCHTR.RD 7X12 AIR-TYPE TRIMMER TEKELEC LUFTTRAT5200	CT 025.7367	
C52	CC 270PF+-5%50V NPO 1206 CERAMIC CHIP CAPACITOR VITRAMON VJ1206A271JFA	CC 099.8867	
C53	CC 270PF+-5%50V NPO 1206 CERAMIC CHIP CAPACITOR VITRAMON VJ1206A271JFA	CC 099.8867	

ROHDE&SCHWARZ	ÄZ 04	Datum Date 1087	Schaltteilliste für Parts list for ED HF-OSZILLATOR	Sachnummer Stock Nr. 802.8835.01 SA	Blatt Page 3

Kennzeichen Component No.	Benennung/Beschreibung Designation	Sachnummer Stock No.	enthalten in contained in
C54	CE 10UF -10+50% 63V 9X13 ELECTROLYTIC CAPACITOR ROEDERST ELKOEK10/63	CE 022.7650	
C55	CC 10PF+-0,5PF50VNPO 1206 CERAMIC CHIP CAPACITOR VITRAMON VJ1206A100DFA	CC 099.8480	
C59	CC 5PF+-0,5PF50V NPO 1206 CERAMIC CHIP CAPACITOR VITRAMON VJ1206A5RODFA	CC 099.8696	
C60	CC 4PF+-0,25PF50V NPO1206 CERAMIC CHIP CAPACITOR VITRAMON VJ1206A4ROCFA	CC 099.8680	
C61	CC 2PF+-0,25PF50V NPO1206 CERAMIC CHIP CAPACITOR VITRAMON VJ1206A2ROCFA	CC 099.8673	
C63	CC 5PF+-0,5PF50V NPO 1206 CERAMIC CHIP CAPACITOR VITRAMON VJ1206A5RODFA	CC 099.8696	
C64	CC 22PF+-5%50V NPO 1206 CERAMIC CHIP CAPACITOR VITRAMON VJ1206A220JFA	CC 099.8396	
C65	CC 10NF-20+50%7X8R4000 CAPACITOR VALVO 2222 63051 64051103	CC 087.7525	
C68	CC 330PF+-10%3X4R2000 CAPACITOR VALVO 2222 63051 331	CC 087.6970	
C70	CC 4,7NF+-10%6X9R2000 CAPACITOR VALVO 2222 63051 472	CC 087.7102	
C71	CE 4,7UF+-20%20V 7X 4X 8 ELECTROLYTIC CAPACITOR ROEDERSTEI ETR 2 4,7/20 20%	CE 022.8110	
C81	CT 9,2PF TAUCHTR.RD 7X12 AIR-TYPE TRIMMER TEKELEC LUFTTRAT5200	CT 025.7367	
C82	CC 270PF+-5%50V NPO 1206 CERAMIC CHIP CAPACITOR VITRAMON VJ1206A271JFA	CC 099.8867	
C83	CC 270PF+-5%50V NPO 1206 CERAMIC CHIP CAPACITOR VITRAMON VJ1206A271JFA	CC 099.8867	
C87	CC 3PF+-0,25PF50V NPO1206 CERAMIC CHIP CAPACITOR VITRAMON VJ1206A3ROCFA	CC 099.8350	
C89	CC 10PF+-0,5PF50VNPO 1206 CERAMIC CHIP CAPACITOR VITRAMON VJ1206A100DFA	CC 099.8480	
C90	CC 2PF+-0,25PF50V NPO1206 CERAMIC CHIP CAPACITOR VITRAMON VJ1206A2ROCFA	CC 099.8673	
C91	CC 2PF+-0,25PF50V NPO1206 CERAMIC CHIP CAPACITOR VITRAMON VJ1206A2ROCFA	CC 099.8673	
C92	CC 10NF-20+50%7X8R4000 CAPACITOR VALVO 2222 63051 64051103	CC 087.7525	

ROHDE&SCHWARZ	ÄZ	Datum Date	Schaltteilliste für Parts list for	Sachnummer Stock Nr.	Blatt Page
	04	1087	ED HF-OSZILLATOR	802.8835.01 SA	4

Kennzeichen Component No.	Benennung/Beschreibung Designation	Sachnummer Stock No.	enthalten in contained in
C93	CC 3PF+-0,25PF50V NPO1206 CERAMIC CHIP CAPACITOR VITRAMON VJ1206A3ROCFA	CC 099.8350	
C94	CC 22PF+-5%50V NPO 1206 CERAMIC CHIP CAPACITOR VITRAMON VJ1206A220JFA	CC 099.8396	
C95	CE 4,7UF+-20%20V 7X 4X 8 ELECTROLYTIC CAPACITOR ROEDERSTEI ETR 2 4,7/20 20%	CE 022.8110	
C98	CC 330PF+-10%3X4R2000 CAPACITOR VALVO 2222 63051 331	CC 087.6970	
C99	CC 4PF+-0,25PF50V NPO1206 CERAMIC CHIP CAPACITOR VITRAMON VJ1206A4ROCFA	CC 099.8680	
C100	CC 4,7NF+-10%6X9R2000 CAPACITOR VALVO 2222 63051 472	CC 087.7102	
C116	CC 100PF+-5%50V NPO 1206 CERAMIC CHIP CAPACITOR VITRAMON VJ1206A101JFA	CC 099.8415	
C139	CC 330PF+-10%3X4R2000 CAPACITOR VALVO 2222 63051 331	CC 087.6970	
C140	CE 1,0UF+-20%35V 5X 4X 7 ELECTROLYTIC CAPACITOR ROEDERSTEI ETR 1 1/40 20%	CE 022.8185	
C141	CC 1NF+-10%63V K2000 CERAMIC CAPACITOR VALVO 2222 63051 102	CC 022.0784	
C156	CC 10NF-20+50%7X8R4000 CAPACITOR VALVO 2222 63051 64051103	CC 087.7525	
C160	CC 10PF+-0,5PF50VNPO 1206 CERAMIC CHIP CAPACITOR VITRAMON VJ1206A100DFA	CC 099.8480	
C162	CC 1NF+-10%63V K2000 CERAMIC CAPACITOR VALVO 2222 63051 102	CC 022.0784	
C200	CC 2,2NF+-10%5X6R2000 CAPACITOR VALVO 2222 63051 222	CC 087.7060	
C201	CC 10NF-20+50%7X8R4000 CAPACITOR VALVO 2222 63051 64051103	CC 087.7525	
BIS/TO C211			
C212	CC 27PF+-2%4X5NPO CAPACITOR VALVO 2222 678 10279	CC 087.6470	
C220	CK 1UF+-10%50V5RM MKT CAPACITOR WIMA MKS2/50/1UF/10%	CK 099.2998	
C221	CC 10NF-20+50%7X8R4000 CAPACITOR VALVO 2222 63051 64051103	CC 087.7525	

Kennzeichen Component No.	Benennung/Beschreibung Designation	Sachnummer Stock No.	enthalten in contained in
C222	CC 10NF-20+50%7X8R4000 CAPACITOR VALVO 2222 63051 64051103	CC 087.7525	
C223	CE 22UF-10+50% 63V 9X13 ELECTROLYTIC CAPACITOR ROEDERST EK 00 CB 222 J	CE 006.7120	
C225	CK 220NF+-5%63V5RM MKT CAPACITOR WIMA MKS2/63/0,22UF/5%	CK 099.2952	
C226	CK 47NF+-5%63V5RM MKT CAPACITOR WIMA MKS2/63/0,047UF/5%	CK 099.2917	
C230	CE 47UF-10+50% 40V 9X13 ELECTROLYTIC CAPACITOR ROEDERST EK 00 CB 247 G	CE 006.7142	
C231	CC 10NF-20+50%7X8R4000 CAPACITOR VALVO 2222 63051 64051103	CC 087.7525	
C232	CC 100PF+-2%6X9NPO CAPACITOR VALVO 2222 678 10101	CC 087.6541	
C233	CC 100PF+-2%6X9NPO CAPACITOR VALVO 2222 678 10101	CC 087.6541	
C250	CC 10NF-20+50%7X8R4000 CAPACITOR VALVO 2222 63051 64051103	CC 087.7525	
C251	CC 10NF-20+50%7X8R4000 CAPACITOR VALVO 2222 63051 64051103	CC 087.7525	
C255	CE 47UF-10+50% 40V 9X13 ELECTROLYTIC CAPACITOR ROEDERST EK 00 CB 247 G	CE 006.7142	
C257	CC 10NF-20+50%7X8R4000 CAPACITOR VALVO 2222 63051 64051103	CC 087.7525	
C259	CE 100UF-10+50% 25V 13X13 ELECTROLYTIC CAPACITOR ROEDERST ELKOEK100/25	CE 208.4007	
C260	CC 1NF+-10%63V K2000 CERAMIC CAPACITOR VALVO 2222 63051 102	CC 022.0784	
C261	CC 1NF+-10%63V K2000 CERAMIC CAPACITOR VALVO 2222 63051 102	CC 022.0784	
C262	CK 1UF+-10%50V5RM MKT CAPACITOR WIMA MKS2/50/1UF/10%	CK 099.2998	
C263	CK 220NF+-5%63V5RM MKT CAPACITOR WIMA MKS2/63/0,22UF/5%	CK 099.2952	
C264	CC 10NF-20+50%7X8R4000 CAPACITOR VALVO 2222 63051 64051103	CC 087.7525	
BIS/TO			

Kennzeichen Component No.	Benennung/Beschreibung Designation	Sachnummer Stock No.	enthalten in contained in
C267			
C268	CE 47UF-10+50% 40V 9X13 ELECTROLYTIC CAPACITOR ROEDERST EK 00 CB 247 G	CE 006.7142	
C269	CC 1NF+-10%63V K2000 CERAMIC CAPACITOR VALVO 2222 63051 102	CC 022.0784	
C300	CC 3PF+-0,25PF50V NPO1206 CERAMIC CHIP CAPACITOR VITRAMON VJ1206A3ROCFA	CC 099.8350	
C301	CK 10NF+-5%63V5RM MKT CAPACITOR WIMA FKS 2/100/0,01UF/5%	CK 099.2869	
C302	CC 3PF+-0,25PF50V NPO1206 CERAMIC CHIP CAPACITOR VITRAMON VJ1206A3ROCFA	CC 099.8350	
C303	CC 100PF+-5%50V NPO 1206 CERAMIC CHIP CAPACITOR VITRAMON VJ1206A101JFA	CC 099.8415	
C304	CC 100PF+-2%6X9NPO CAPACITOR VALVO 2222 678 10101	CC 087.6541	
C310	CC 1NF+-10%63V K2000 CERAMIC CAPACITOR VALVO 2222 63051 102	CC 022.0784	
C311	CC 1NF+-10%63V K2000 CERAMIC CAPACITOR VALVO 2222 63051 102	CC 022.0784	
C315	CC 10NF-20+50%7X8R4000 CAPACITOR VALVO 2222 63051 64051103	CC 087.7525	
C320	CC 10NF-20+50%7X8R4000 CAPACITOR VALVO 2222 63051 64051103	CC 087.7525	
C330	CC 10NF-20+50%7X8R4000 CAPACITOR VALVO 2222 63051 64051103	CC 087.7525	
BIS/TO C335			
C340	CE 100UF-10+50% 16V 9X13 ELECTROLYTIC CAPACITOR ROEDERST EK 00CB 310 D	CE 006.7165	
C341	CE 100UF-10+50% 16V 9X13 ELECTROLYTIC CAPACITOR ROEDERST EK 00CB 310 D	CE 006.7165	
C343	CE 100UF-10+50% 16V 9X13 ELECTROLYTIC CAPACITOR ROEDERST EK 00CB 310 D	CE 006.7165	
C344	CC 10NF-20+50%7X8R4000 CAPACITOR VALVO 2222 63051 64051103	CC 087.7525	
C345	CC 10NF-20+50%7X8R4000 CAPACITOR VALVO 2222 63051 64051103	CC 087.7525	
C346	CC 10NF-20+50%7X8R4000 CAPACITOR VALVO 2222 63051 64051103	CC 087.7525	

ROHDE&SCHWARZ	ÄZ 04	Datum Date 1087	Schaltteilliste für Parts list for ED HF-OSZILLATOR	Sachnummer Stock Nr. 802.8835.01 SA	Blatt Page 7

Kennzeichen Component No.	Benennung/Beschreibung Designation	Sachnummer Stock No.	enthalten in contained in
C348	CC 10NF-20+50%7X8R4000 CAPACITOR VALVO 2222 63051 64051103	CC 087.7525	
C360	CC 220PF+-2%6X7N750 CAPACITOR VALVO 2222 678 58221	CC 087.6941	
C362	CC 47PF+-2%5X6NPO CAPACITOR VALVO 2222 678 10479	CC 087.6506	
C364	CC 47PF+-2%5X6NPO CAPACITOR VALVO 2222 678 10479	CC 087.6506	
C366	CC 10NF-20+50%7X8R4000 CAPACITOR VALVO 2222 63051 64051103	CC 087.7525	
C367	CC 10NF-20+50%7X8R4000 CAPACITOR VALVO 2222 63051 64051103	CC 087.7525	
C370	CC 10NF-20+50%7X8R4000 CAPACITOR VALVO 2222 63051 64051103	CC 087.7525	
C371	CC 10NF-20+50%7X8R4000 CAPACITOR VALVO 2222 63051 64051103	CC 087.7525	
C380	CC 10NF-20+50%7X8R4000 CAPACITOR VALVO 2222 63051 64051103	CC 087.7525	
C390	CC 10NF-20+50%7X8R4000 CAPACITOR VALVO 2222 63051 64051103	CC 087.7525	
C400	CK 100NF+-5%63V5RM MKT CAPACITOR WIMA MKS/2/63/0,1UF/5%	CK 099.2930	
C401	CK 470NF+-5%63V5RM MKT CAPACITOR WIMA MKS2/63/0,47UF/5%	CK 099.2975	
C402	CE 22UF-10+50% 63V 9X13 ELECTROLYTIC CAPACITOR ROEDERST EK 00 CB 222 J	CE 006.7120	
C410	CK 470NF+-10%160V27X7X17 WIMA MKP10 0,47UF160V 10%	803.0721	
C411	CC 4,7NF+-10%6X9R2000 CAPACITOR VALVO 2222 63051 472	CC 087.7102	
C412	CK 470NF+-10%160V27X7X17 WIMA MKP10 0,47UF160V 10%	803.0721	
C413	CC 1,5PF+-0,25PF3X4P100 CAPACITOR VALVO 2222 678 03158	CC 087.6193	
C426	CK 220NF+-10%160V18X7X14 MET.POLYPROP.CAPACITOR WIMA MKP10 0,22UF160V 10%	803.0496	
C450	CC 470PF+-5%50V NPO 1206 CERAMIC CHIP CAPACITOR VITRAMON VJ1206A471JFA	CC 099.8515	

Kennzeichen Component No.	Benennung/Beschreibung Designation	Sachnummer Stock No.	enthalten in contained in
C461	CC 470PF+-5%50V NPO 1206 CERAMIC CHIP CAPACITOR VITRAMON VJ1206A471JFA	CC 099.8515	
C501	CC 18PF+-2%3X4NPO CAPACITOR VALVO 2222 678 10189	CC 087.6458	
C503	CC 2,2NF+-10%50VX7R 1206 CERAMIC CHIP CAPACITOR VITRAMON VJ1206Y222KFA	CC 099.8444	
C504	CE 47UF-10+50% 40V 9X13 ELECTROLYTIC CAPACITOR ROEDERST EK 00 CB 247 G	CE 006.7142	
C505	CC 1NF+-10%50VX7R 1206 CERAMIC CHIP CAPACITOR VITRAMON VJ1206Y102KFA	CC 099.8438	
C506	CC 2,2NF+-10%50VX7R 1206 CERAMIC CHIP CAPACITOR VITRAMON VJ1206Y222KFA	CC 099.8444	
C507	CC 10NF+-10%50V X7R 1206 CERAMIC CHIP CAPACITOR VITRAMON VJ1206Y103KFA	CC 099.8521	
C508	CC 220PF+-5%50V NPO 1206 CERAMIC CHIP CAPACITOR VITRAMON VJ1206A221JFA	CC 099.8850	
C509	CC 15PF+-2%3X4NPO CAPACITOR VALVO 2222 678 10159	CC 087.6441	
C510	CC 1NF+-10%50VX7R 1206 CERAMIC CHIP CAPACITOR VITRAMON VJ1206Y102KFA	CC 099.8438	
C515	CC 2,2NF+-10%50VX7R 1206 CERAMIC CHIP CAPACITOR VITRAMON VJ1206Y222KFA	CC 099.8444	
C516	CC 10PF+-0,25PF3X4NPO CAPACITOR VALVO 2222 678 09109	CC 087.6429	
C520	CC 2,2NF+-10%50VX7R 1206 CERAMIC CHIP CAPACITOR VITRAMON VJ1206Y222KFA	CC 099.8444	
C525	CC 10NF-20+50%7X8R4000 CAPACITOR VALVO 2222 63051 64051103	CC 087.7525	
C530	CC 10NF-20+50%7X8R4000 CAPACITOR VALVO 2222 63051 64051103	CC 087.7525	
C540	CC 1NF+-10%63V K2000 CERAMIC CAPACITOR VALVO 2222 63051 102	CC 022.0784	
C550	CC 10NF-20+50%7X8R4000 CAPACITOR VALVO 2222 63051 64051103	CC 087.7525	
C551	CC 1NF+-10%63V K2000 CERAMIC CAPACITOR VALVO 2222 63051 102	CC 022.0784	
C561	CC 8,2PF+-0,25PF3X4NPO CAPACITOR VALVO 2222 678 09828	CC 087.6412	

Kennzeichen Component No.	Benennung/Beschreibung Designation	Sachnummer Stock No.	enthalten in contained in
C562	CC 18PF+-2%3X4NPO CAPACITOR VALVO 2222 678 10189	CC 087.6458	
C570	CC 1NF+-10%63V K2000 CERAMIC CAPACITOR VALVO 2222 63051 102	CC 022.0784	
C575	CC 10NF-20+50%7X8R4000 CAPACITOR VALVO 2222 63051 64051103	CC 087.7525	
C576	CC 100PF+-2%6X9NPO CAPACITOR VALVO 2222 678 10101	CC 087.6541	
C578	CC 1NF+-10%63V K2000 CERAMIC CAPACITOR VALVO 2222 63051 102	CC 022.0784	
C579	CC 1NF+-10%63V K2000 CERAMIC CAPACITOR VALVO 2222 63051 102	CC 022.0784	
C580	CC 10NF-20+50%7X8R4000 CAPACITOR VALVO 2222 63051 64051103	CC 087.7525	
C581	CC 10NF-20+50%7X8R4000 CAPACITOR VALVO 2222 63051 64051103	CC 087.7525	
C582	CC 100PF+-2%6X9NPO CAPACITOR VALVO 2222 678 10101	CC 087.6541	
C583	CC 15PF+-5%50V NPO 1206 CERAMIC CHIP CAPACITOR VITRAMON VJ1206A150JFA	CC 099.8750	
C585	CC 10NF-20+50%7X8R4000 CAPACITOR VALVO 2222 63051 64051103	CC 087.7525	
C586	CC 10NF-20+50%7X8R4000 CAPACITOR VALVO 2222 63051 64051103	CC 087.7525	
C590	CC 10NF-20+50%7X8R4000 CAPACITOR VALVO 2222 63051 64051103	CC 087.7525	
C591	CC 1NF+-10%63V K2000 CERAMIC CAPACITOR VALVO 2222 63051 102	CC 022.0784	
C594	CC 82PF+-5%50V NPO 1206 CERAMIC CHIP CAPACITOR VITRAMON VJ1206A820JFA	CC 099.8821	
C595	CC 4,7NF+-10%6X9R2000 CAPACITOR VALVO 2222 63051 472	CC 087.7102	
C596	CC 330PF+-10%3X4R200C CAPACITOR VALVO 2222 63051 331	CC 087.6970	
C597	CC 680PF+-10%4X5R2000 CAPACITOR VALVO 2222 63051 681	CC 087.7019	
C598	CC 4,7NF+-10%6X9R2000 CAPACITOR VALVO 2222 63051 472	CC 087.7102	

Kennzeichen Component No.	Benennung/Beschreibung Designation	Sachnummer Stock No.	enthalten in contained in
C599	CC 330PF+-10%3X4R2000 CAPACITOR VALVO 2222 63051 331	CC 087.6970	
C600	CC 560PF+-10%3X4R2000 CAPACITOR VALVO 2222 63051 561	CC 087.7002	
C601	LD FILT.40DB/10GHZ10A300V LOWPASS-FILTER ERIE 9900-001-6020	911.0705	
C602	LD FILT.40DB/10GHZ10A300V LOWPASS-FILTER ERIE 9900-001-6020	911.0705	
C603	LD FILT.40DB/10GHZ10A300V LOWPASS-FILTER ERIE 9900-001-6020	911.0705	
C604	CC 1NF+-10%50VX7R 1206 CERAMIC CHIP CAPACITOR VITRAMON VJ1206Y102KFA	CC 099.8438	
C610	CC 10NF-20+50%7X8R4000 CAPACITOR VALVO 2222 63051 64051103	CC 087.7525	
C620	CK 1UF+-10%50V5RM MKT CAPACITOR WIMA MKS2/50/1UF/10%	CK 099.2998	
C621	CE 22UF-10+50% 63V 9X13 ELECTROLYTIC CAPACITOR ROEDERST EK 00 CB 222 J	CE 006.7120	
C622	CC 470PF+-10%3X4R2000 CAPACITOR VALVO 2222 63051 471	CC 087.6993	
C623	CK 1UF+-10%50V5RM MKT CAPACITOR WIMA MKS2/50/1UF/10%	CK 099.2998	
C630	CC 10NF-20+50%7X8R4000 CAPACITOR VALVO 2222 63051 64051103	CC 087.7525	
C631	CC 10NF-20+50%7X8R4000 CAPACITOR VALVO 2222 63051 64051103	CC 087.7525	
C633	CC 1NF+-10%63V K2000 CERAMIC CAPACITOR VALVO 2222 63051 102	CC 022.0784	
C634	CC 68PF+-5%50V NPO 1206 CERAMIC CHIP CAPACITOR VITRAMON VJ1206A680JFA	CC 099.8815	
C640	CC 10NF-20+50%7X8R4000 CAPACITOR VALVO 2222 63051 64051103	CC 087.7525	
C641	CC 10NF-20+50%7X8R4000 CAPACITOR VALVO 2222 63051 64051103	CC 087.7525	
C642	CC 10NF-20+50%7X8R4000 CAPACITOR VALVO 2222 63051 64051103	CC 087.7525	
C650	CC 100PF+-2%6X9NPO CAPACITOR VALVO 2222 678 10101	CC 087.6541	

Kennzeichen Component No.	Benennung/Beschreibung Designation	Sachnummer Stock No.	enthalten in contained in
C667	CC 47PF+-5550V COG 1206 CERAMIC CHIP CAPACITOR VITRAMON VJ1206A470JFA	CC 099.8496	
C668	CK 1UF+-10%50V5RM MKT CAPACITOR WIMA MKS2/50/1UF/10%	CK 099.2998	
C700	LD FILT.40DB/10GHZ10A300V LOWPASS-FILTER ERIE 9900-001-6020	911.0705	
D1	BL MM74HC4051N 8CH.AN.MUX 8CH.ANALOG MUX/DEMUX NSC MM74HC4051N	BL 099.9670	
D2	BL CD4094BF 8BIT SH.REG SHIFT REGISTER RCA CD4094BF	BL 418.0064	
D15	BL MM74HC4051N 8CH.AN.MUX 8CH.ANALOG MUX/DEMUX NSC MM74HC4051N	BL 099.9670	
D18	BL CD4094BF 8BIT SH.REG SHIFT REGISTER RCA CD4094BF	BL 418.0064	
D54	BO LT337AH -ADJ0A5 VREGL VOLTAGE REGULATOR LIN.TECHN. LT337AH	803.6665	
D150	BO UA78M12HC+12V0A5 VREGL VOLTAGE REGULATOR FAIRCHILD MA78M12HC	BO 569.3155	
D200	BL 74F162PC BCD DEC.COUNT BCD DECADE COUNTER FAIRCHILD 74F162APC	BL 099.9892	
D202	BL MM74HC00N 4X2IN.NAND QUAD 2-INPUT NAND GATE MOTOROLA MC74HC00N	BL 571.3194	
D203	BL 74F162PC BCD DEC.COUNT BCD DECADE COUNTER FAIRCHILD 74F162APC	BL 099.9892	
D205	BL CD4094BF 8BIT SH.REG SHIFT REGISTER RCA CD4094BF	BL 418.0064	
D206	BL CD4094BF 8BIT SH.REG SHIFT REGISTER RCA CD4094BF	BL 418.0064	
D207	BL MM74HC162N DEC.COUNT. SYNC.DECADE COUNTER NSC MM74HC162N	BL 099.9570	
D208	BL MM74HC162N DEC.COUNT. SYNC.DECADE COUNTER NSC MM74HC162N	BL 099.9570	
D210	BL MM74HC107N 2XJK-FF CL DUAL J-K FLIPFLOP W.CLEAR NSC MM74HC107N	BL 099.9534	
D250	BL SN74LS02N 4/2INP.NOR IC NOR GATE SN74LS02N TEXAS SN74LS020N	266.4658	

Kennzeichen Component No.	Benennung/Beschreibung Designation	Sachnummer Stock No.	enthalten in contained in
D255	BL MM74HC390N 2X4B.COUNT DUAL 4-BIT DECADE COUNTER NSC MM74HC390N	BL 099.9640	
D260	BO MC1496L MOD/DEMOD MODULATOR/DEMODULATOR MOTOROLA MC1496L	BO 473.9024	
D310	BL CA3199ESEL 4:1 DIVID DIVIDER	801.8354	
D315	BL SP8647BDG10:1DIVID UHF DIVIDER PLESSEY SP8647BDG	BL 300.6747	
D320	BL 74F00PC 4X2IN.NANDG QUAD-NAND-GATE FAIRCHILD 74F00PC	BL 344.6659	
D330	BL 74F162PC BCD DEC.COUNT BCD DECADE COUNTER FAIRCHILD 74F162APC	BL 099.9892	
D331	BL 74F162PC BCD DEC.COUNT BCD DECADE COUNTER FAIRCHILD 74F162APC	BL 099.9892	
D332	BL 74F162PC BCD DEC.COUNT BCD DECADE COUNTER FAIRCHILD 74F162APC	BL 099.9892	
D333	BL 74F162PC BCD DEC.COUNT BCD DECADE COUNTER FAIRCHILD 74F162APC	BL 099.9892	
D360	BL CD4094BF 8BIT SH.REG SHIFT REGISTER RCA CD4094BF	BL 418.0064	
D365	BL CD4094BF 8BIT SH.REG SHIFT REGISTER RCA CD4094BF	BL 418.0064	
D370	BL MM74HC390N 2X4B.COUNT DUAL 4-BIT DECADE COUNTER NSC MM74HC390N	BL 099.9640	
D371	BL MM74HC02N 4X2IN.NORG QUAD 2-INPUT NOR GATE MOTOROLA MC74HC02N	BL 571.3142	
D380	BL MM74HC74N 2XD-FLIPFL DUAL D FLIP-FLOP NSC MM74HC74N	BL 571.3171	
D390	BL MM74HC107N 2XJK-FF CL DUAL J-K FLIPFLOP W.CLEAR NSC MM74HC107N	BL 099.9534	
D395	BL MM74HC00N 4X2IN.NAND QUAD 2-INPUT NAND GATE MOTOROLA MC74HC00N	BL 571.3194	
D400	BL MM74HC02N 4X2IN.NORG QUAD 2-INPUT NOR GATE MOTOROLA MC74HC02N	BL 571.3142	
D410	BJ IH401AJE 4X ANALOGSCH ANALOG SWITCH INTERSIL IH401AJE	BJ 334.3870	
D530	BL MC10138L 4B.COUNTER COUNTER MOTOROLA MC10138L	BL 564.8407	

Kennzeichen Component No.	Benennung/Beschreibung Designation	Sachnummer Stock No.	enthalten in contained in
D590	BL SN74LS04N 6/INVERTER HEXINVERTER TEXAS SN74LS04N	266.2010	
D610	BL MC4044P PHASE-L-L PHASE LOCKED LOOP MOTOROLA MC4044P	BL 443.2980	
D630	BJ TL604CP 2X ANALOGSCH ANALOG SWITCH TEXAS INST TL604CP	BJ 300.6199	
D670	SR 5V200OHM 1MAL UM 1 REED RELAY ELECTROL RA 30421051-02	SR 267.5364	
L21	LD 0,33UH10%0,22OHM0,830A CHOKE DELEVAN DROSSEL1025--08	LD 067.2805	
L23	LD 0,33UH10%0,22OHM0,830A CHOKE DELEVAN DROSSEL1025--08	LD 067.2805	
L24	LD 0,39UH10%0,30OHM0,710A CHOKE DELEVAN DROSSEL1025-10	LD 067.2811	
L26	LL SPULE	802.7474	802.6455
L31	LD 0,33UH10%0,22OHM0,830A CHOKE DELEVAN DROSSEL1025--08	LD 067.2805	
L50	LD 0,22UH10%0,14OHM1,045A CHOKE DELEVAN DROSSEL1025-04	LD 067.2786	
L51	LD 0,22UH10%0,14OHM1,045A CHOKE DELEVAN DROSSEL1025-04	LD 067.2786	
L53	LD 0,22UH10%0,14OHM1,045A CHOKE DELEVAN DROSSEL1025-04	LD 067.2786	
L54	LD 0,33UH10%0,22OHM0,830A CHOKE DELEVAN DROSSEL1025--08	LD 067.2805	
L56	LL SPULE	802.7422	802.6455
L61	LD 0,22UH10%0,14OHM1,045A CHOKE DELEVAN DROSSEL1025-04	LD 067.2786	
L81	LD 0,15UH10%0,10OHM1,230A CHOKE DELEVAN DROSSEL1025-00	LD 067.2763	
L83	LD 0,15UH10%0,10OHM1,230A CHOKE DELEVAN DROSSEL1025-00	LD 067.2763	
L84	LD 0,15UH10%0,10OHM1,230A CHOKE DELEVAN DROSSEL1025-00	LD 067.2763	
L86	LL SPULE	802.7516	802.6455
L91	LD 0,15UH10%0,10OHM1,230A CHOKE DELEVAN DROSSEL1025-00	LD 067.2763	

Kennzeichen Component No.	Benennung/Beschreibung Designation	Sachnummer Stock No.	enthalten in contained in
L140	LD 0,33UH10%0,22OHM0,830A CHOKE DELEVAN DROSSEL1025--08	LD 067.2805	
L156	LD 1,00UH10%1,00OHM0,390A CHOKE DELEVAN 1025-20	LD 067.2863	
L230	LD 15,0UH10%2,80OHM0,157A CHOKE DELEVAN DROSSEL1025-48	LD 067.3001	
L255	LD 220 UH10%21,0OHM0,052A CHOKE DELEVAN DROSSEL1025-76	LD 067.3147	
L259	LD 4,70UH10%1,20OHM0,239A CHOKE DELEVAN DROSSEL1025-36	LD 067.2940	
L304	LD 1,50UH10%0,22OHM0,560A CHOKE DELEVAN DROSSEL 1025-24	LD 067.2886	
L347	LD 2,20UH10%0,40OHM0,415A CHOKE DELEVAN DROSSEL1025-28	LD 067.2905	
L348	LD 2,20UH10%0,40OHM0,415A CHOKE DELEVAN DROSSEL1025-28	LD 067.2905	
L349	LD 2,20UH10%0,40OHM0,415A CHOKE DELEVAN DROSSEL1025-28	LD 067.2905	
L500	LD 115NH/22PF Q50 ALUKERN COIL-CORE TOKO E521 AN-070023	807.3077	
L501	LD 0,39UH10%0,30OHM0,710A CHOKE DELEVAN DROSSEL1025-10	LD 067.2811	
L512	TRIMMWERT / SELECTED		
L550	LD 4,70UH10%1,20OHM0,239A CHOKE DELEVAN DROSSEL1025-36	LD 067.2940	
L561	LD 0,39UH10%0,30OHM0,710A CHOKE DELEVAN DROSSEL1025-10	LD 067.2811	
L575	LD 4,70UH10%1,20OHM0,239A CHOKE DELEVAN DROSSEL1025-36	LD 067.2940	
L579	LD 0,047 UH 10% CHOKE INDUSTRIA BAUREIHE1025,0,047	249.5995	
L595	LD 1,00UH10%1,00OHM0,390A CHOKE DELEVAN 1025-20	LD 067.2863	
L599	LD 1,00UH10%1,00OHM0,390A CHOKE DELEVAN 1025-20	LD 067.2863	
L600	LD 0,47UH10%0,35OHM0,660A CHOKE DELEVAN DROSSEL1025-12	LD 067.2828	

Kennzeichen Component No.	Benennung/Beschreibung Designation	Sachnummer Stock No.	enthalten in contained in
L633	LD 0,33UH10%0,22OHM0,830A CHOKE DELEVAN DROSSEL1025--08	LD 067.2805	
N10	BO NE5532AFE 2XL.N.OPAMP OPERATIONAL AMPLIFIER VALVO NE5532AFE	BO 356.0450	
N220	BO LF156J BIFET OPAMP OPERATIONAL AMPLIFIER MOTOROLA LF156J	BO 645.7251	
N240	BO LM393N 2X COMPAR COMPARATOR NSC LM393N	BO 803.0696	
N260	BO LM311N COMPAR COMPARATOR NSC LM311N	BO 394.8755	
N300	BM OM345 ANTENNEN-VERST ANTENNA AMPLIFIER VALVO OM345	BM 285.1596	
N400	BO LF356BJ BIFET OPAMP OPERATIONAL AMPLIFIER MOTOROLA LF356J	300.6053	
N440	BO LM393N 2X COMPAR COMPARATOR NSC LM393N	BO 803.0696	
N520	BL MC10H116L 3X L.RECEIV LINE RECEIVER MOTOROLA MC10H116L	803.0538	
N570	BL MC10H116L 3X L.RECEIV LINE RECEIVER MOTOROLA MC10H116L	803.0538	
N580	BJ SN75140P 2XLINE REC LINE RECEIVER TEXAS INST SN75140P	801.8254	
N620	BO LF156J BIFET OPAMP OPERATIONAL AMPLIFIER MOTOROLA LF156J	BO 645.7251	
N650	BO LM393N 2X COMPAR COMPARATOR NSC LM393N	BO 803.0696	
N660	BO LM393N 2X COMPAR COMPARATOR NSC LM393N	BO 803.0696	
P1	VL WIRE-WRAP PIN WIRE-WRAP PIN BERG NR. 75 403-003	VL 088.4542	
BIS/TO P4	1-POLIG		
R1	RL 0,35W 402 OHM+-1%TK50 RESISTOR DRALORIC SMA0207/402OHM-F-D	RL 083.0326	
R2	RL 0,35W200 OHM+-0,1%TK25 RESISTOR DRALORIC SMA0207/200OHM-B-E	RL 083.7808	

Kennzeichen Component No.	Benennung/Beschreibung Designation	Sachnummer Stock No.	enthalten in contained in
R3	RL 0,35W 100 OHM+-1%TK50 METALFILM-RESISTOR DRALORIC SMA0207/100/HM-F-D	RL 082.6543	
R4	RL 0,35W 51,1 OHM+-1%TK50 RESISTOR DRALORIC SMA0207/51,1OHM-F-D	RL 082.9536	
R5	RL 0,35W24,90 OHM+-1%TK50 RESISTOR DRALORIC SMA0207/24,9OHM-F-D	RL 082.9236	
R6	RL 0,35W12,10 OHM+-1%TK50 RESISTOR DRALORIC SMA0207/12,1OHM-F-D	RL 082.8930	
R7	RL 0,35W6,19 OHM+-1%TK50 METALFILMRESISTOR RESISTA MK2 6,19 OHM 1% TK50	RL 099.8050	
R8	RL 0,35W6,19 OHM+-1%TK50 METALFILMRESISTOR RESISTA MK2 6,19 OHM 1% TK50	RL 099.8050	
R9	RL 0,35W 274 OHM+-1%TK50 RESISTOR DRALORIC SMA0207/274OHM-F-D	RL 083.0178	
R10	RL 0,35W 511 OHM+-1%TK50 RESISTOR DRALORIC SMA0207/511OHM-F-D	RL 083.0426	
R11	RL 0,35W15 OHM 1%TK50 RESISTOR DRALORIC SMA0207/15OHM-F-D	RL 082.9020	
R12	RL 0,35W 2,21KOHM+-1%TK50 RESISTOR DRALORIC SMA 0207/2,21K-F-C	RL 082.2477	
R13	RL 0,35W 1KOHM+-1%TK50 RESISTOR DRALORIC SMA0207/1K-F-C	RL 082.2160	
R14	RL 0,35W 1KOHM+-1%TK50 RESISTOR DRALORIC SMA0207/1K-F-C	RL 082.2160	
R15	RL 0,35W 1KOHM+-1%TK50 RESISTOR DRALORIC SMA0207/1K-F-C	RL 082.2160	
R16	RL 0,35W 562 OHM+-1%TK50 RESISTOR DRALORIC SMA0207/562OHM-F-D	RL 083.0461	
R24	RL 0,35W 221 OHM+-1%TK50 RESISTOR DRALORIC SMA0207/221OHM-F-D	RL 083.0084	
R26	RG 10 KOHM+-1%TK100 1206 CHIP RESISTOR DALE CRCW1206 10,0KOHM FT	RG 007.0793	
R27	RG 825 OHM+-1%TK100 1206 CHIP RESISTOR DALE CRCW1206 825OHM F T	RG 006.7259	
R29	RG 47,5 OHM+-1%TK100 1206 RESISTOR CHIP DALE CRCW1206 47,5OHM F T	RG 007.5566	
R30	RL 0,35W 2,21KOHM+-1%TK50 RESISTOR DRALORIC SMA 0207/2,21K-F-C	RL 082.2477	

Kennzeichen Component No.	Benennung/Beschreibung Designation	Sachnummer Stock No.	enthalten in contained in
R35	RL 0,35W 2,74KOHM+-1%TK50 RESISTOR DRALORIC SMA0207/2,74K-F-D	RL 083.0926	
R40	RL 0,35W 1KOHM+-1%TK50 RESISTOR DRALORIC SMA0207/1K-F-C	RL 082.2160	
R41	RL 0,35W 562 OHM+-1%TK50 RESISTOR DRALORIC SMA0207/562OHM-F-D	RL 083.0461	
R42	RL 0,35W 47,5 OHM+-1%TK50 RESISTOR DRALORIC SMA0207/47,5OHM-F-D	RL 082.9507	
R45	RL 0,35W 10,0KOHM+-1%TK50 RESISTOR DRALORIC SMA0207/10K-F-D	RL 083.1297	
R47	RL 0,35W 3,32KOHM+-1%TK50 RESISTOR DRALORIC SMA0207/3,32K-F-D	RL 083.0990	
R48	RL 0,35W 1KOHM+-1%TK50 RESISTOR DRALORIC SMA0207/1K-F-C	RL 082.2160	
R49	RS 0,5W500 OHM+-10%10X10X CERMET POTENTIOMETER T BOURNS 3386F-1-501	RS 247.7878	
R50	RL 0,35W 681 OHM+-1%TK50 RESISTOR DRALORIC SMA0207/681OHM-F-D	RL 083.0490	
R51	RL 0,35W 3,24KOHM+-1%TK50 RESISTOR DRALORIC SMA0207/3,24K-F-D	RL 082.6843	
R52	RL 0,35W 332 OHM+-1%TK50 RESISTOR DRALORIC SMA0207/332OHM-F-D	RL 083.0255	
R54	RL 0,35W 221 OHM+-1%TK50 RESISTOR DRALORIC SMA0207/221OHM-F-D	RL 083.0084	
R56	RG 10 KOHM+-1%TK100 1206 CHIP RESISTOR DALE CRCW1206 10,0KOHM FT	RG 007.0793	
R57	RG 825 OHM+-1%TK100 1206 CHIP RESISTOR DALE CRCW1206 825OHM F T	RG 006.7259	
R59	RG 47,5 OHM+-1%TK100 1206 RESISTOR CHIP DALE CRCW1206 47,5OHM F T	RG 007.5566	
R60	RL 0,35W 2,21KOHM+-1%TK50 RESISTOR DRALORIC SMA 0207/2,21K-F-C	RL 082.2477	
R65	RL 0,35W 2,74KOHM+-1%TK50 RESISTOR DRALORIC SMA0207/2,74K-F-D	RL 083.0926	
R70	RL 0,35W 1KOHM+-1%TK50 RESISTOR DRALORIC SMA0207/1K-F-C	RL 082.2160	
R71	RL 0,35W 562 OHM+-1%TK50 RESISTOR DRALORIC SMA0207/562OHM-F-D	RL 083.0461	

ROHDE&SCHWARZ	ÄZ	Datum Date	Schaltteilliste für Parts list for	Sachnummer Stock Nr.	Blatt Page
	04	1087	ED HF-OSZILLATOR	802.8835.01 SA	18

Kennzeichen Component No.	Benennung/Beschreibung Designation	Sachnummer Stock No.	enthalten in contained in
R72	RL 0,35W 47,5 OHM+-1%TK50 RESISTOR DRALORIC SMA0207/47,5OHM-F-D	RL 082.9507	
R75	RL 0,35W 10,0KOHM+-1%TK50 RESISTOR DRALORIC SMA0207/10K-F-D	RL 083.1297	
R77	RL 0,35W 3,32KOHM+-1%TK50 RESISTOR DRALORIC SMA0207/3,32K-F-D	RL 083.0990	
R78	RL 0,35W 1KOHM+-1%TK50 RESISTOR DRALORIC SMA0207/1K-F-C	RL 082.2160	
R79	RS 0,5W500 OHM+-10%10X10X CERMET POTENTIOMETER T BOURNS 3386F-1-501	RS 247.7878	
R84	RL 0,35W 221 OHM+-1%TK50 RESISTOR DRALORIC SMA0207/221OHM-F-D	RL 083.0084	
R86	RG 10 KOHM+-1%TK100 1206 CHIP RESISTOR DALE CRCW1206 10,0KOHM FT	RG 007.0793	
R87	RG 825 OHM+-1%TK100 1206 CHIP RESISTOR DALE CRCW1206 825OHM F T	RG 006.7259	
R89	RG 47,5 OHM+-1%TK100 1206 RESISTOR CHIP DALE CRCW1206 47,5OHM F T	RG 007.5566	
R90	RL 0,35W 2,21KOHM+-1%TK50 RESISTOR DRALORIC SMA 0207/2,21K-F-C	RL 082.2477	
R95	RL 0,35W 2,74KOHM+-1%TK50 RESISTOR DRALORIC SMA0207/2,74K-F-D	RL 083.0926	
R100	RL 0,35W 1KOHM+-1%TK50 RESISTOR DRALORIC SMA0207/1K-F-C	RL 082.2160	
R101	RL 0,35W 562 OHM+-1%TK50 RESISTOR DRALORIC SMA0207/562OHM-F-D	RL 083.0461	
R102	RL 0,35W 39,2 OHM+-1%TK50 RESISTOR DRALORIC SMA0207/39,2OHM-F-D	RL 082.9420	
R105	RL 0,35W 10,0KOHM+-1%TK50 RESISTOR DRALORIC SMA0207/10K-F-D	RL 083.1297	
R107	RL 0,35W 3,32KOHM+-1%TK50 RESISTOR DRALORIC SMA0207/3,32K-F-D	RL 083.0990	
R108	RL 0,35W 1KOHM+-1%TK50 RESISTOR DRALORIC SMA0207/1K-F-C	RL 082.2160	
R109	RS 0,5W500 OHM+-10%10X10X CERMET POTENTIOMETER T BOURNS 3386F-1-501	RS 247.7878	
R116	RG 825 OHM+-1%TK100 1206 CHIP RESISTOR DALE CRCW1206 825OHM F T	RG 006.7259	

Kennzeichen Component No.	Benennung/Beschreibung Designation	Sachnummer Stock No.	enthalten in contained in
R155	RL 0,35W 47,5 OHM+-1%TK50 RESISTOR DRALORIC SMA0207/47,5OHM-F-D	RL 082.9507	
R156	RL 0,35W 47,5 OHM+-1%TK50 RESISTOR DRALORIC SMA0207/47,5OHM-F-D	RL 082.9507	
R157	RL 0,35W 27,4KOHM+-1%TK50 RESISTOR DRALORIC SMA 0207/27,4K-F-C	RL 082.2583	
R160	RG 33,2 OHM+-1%TK100 1206 RESISTOR CHIP DALE CRCW1206 33,2OHM F T	RG 007.5520	
R161	RG 121 OHM+-1%TK100 1206 CHIP RESISTOR DALE CRCW1206 121OHM F T	RG 006.8903	
R162	RG 100 OHM+-1%TK100 1206 CHIP RESISTOR DALE CRCW1206 100OHM F T	RG 006.8884	
R163	RL 0,35W 47,5KOHM+-1%TK50 RESISTOR DRALORIC SMA/207/47,5K-F-C	RL 083.1800	
R164	RG 215 OHM+-2%TK200 1206 CHIP RESISTOR DRALORIC CGB3216 215OHM2% TK	006.8961	
R165	RG 100 OHM+-1%TK100 1206 CHIP RESISTOR DALE CRCW1206 100OHM F T	RG 006.8884	
R166	RL 0,35W 475 KOHM+-1%TK50 RESISTOR DRALORIC SMA0207/475K-F-C	RL 083.2593	
R168	RG 121 OHM+-1%TK100 1206 CHIP RESISTOR DALE CRCW1206 121OHM F T	RG 006.8903	
R169	RG 10 KOHM+-1%TK100 1206 CHIP RESISTOR DALE CRCW1206 10,0KOHM FT	RG 007.0793	
R200	RL 0,35W 100 OHM+-1%TK50 METALFILM-RESISTOR DRALORIC SMA0207/100/HM-F-D	RL 082.6543	
R201	RL 0,35W 2,74KOHM+-1%TK50 RESISTOR DRALORIC SMA0207/2,74K-F-D	RL 083.0926	
R202	RL 0,21W 221 OHM+-1%TK50 RESISTOR RESISTA MK1 221OHM 1% TK50	RL 092.1367	
R205	RL 0,35W 2,21KOHM+-1%TK50 RESISTOR DRALORIC SMA 0207/2,21K-F-C	RL 082.2477	
R210	RL 0,35W 10,0KOHM+-1%TK50 RESISTOR DRALORIC SMA0207/10K-F-D	RL 083.1297	
R211	RL 0,35W 10,0KOHM+-1%TK50 RESISTOR DRALORIC SMA0207/10K-F-D	RL 083.1297	
R221	RL 0,35W 4,75KOHM+-1%TK50 RESISTOR DRALORIC SMA0207/4,75K-F-D	RL 083.1097	

Kennzeichen Component No.	Benennung/Beschreibung Designation	Sachnummer Stock No.	enthalten in contained in
R222	RL 0,35W 10,0KOHM+-1%TK50 RESISTOR DRALORIC SMA0207/10K-F-D	RL 083.1297	
R223	RL 0,35W 10,0KOHM+-1%TK50 RESISTOR DRALORIC SMA0207/10K-F-D	RL 083.1297	
R225	RL 0,35W 1,82KOHM+-1%TK50 RESISTOR DRALORIC SMA0207/1,82K-F-C	RL 082.2277	
R226	RL 0,35W 10,0KOHM+-1%TK50 RESISTOR DRALORIC SMA0207/10K-F-D	RL 083.1297	
R230	RL 0,35W 10,0KOHM+-1%TK50 RESISTOR DRALORIC SMA0207/10K-F-D	RL 083.1297	
R231	RL 0,35W 1KOHM+-1%TK50 RESISTOR DRALORIC SMA0207/1K-F-C	RL 082.2160	
R233	RL 0,35W 150 OHM+-1%TK50 RESISTOR DRALORIC SMA0207/150OHM-F-D	RL 082.9942	
R234	RL 0,35W 2,21KOHM+-1%TK50 RESISTOR DRALORIC SMA 0207/2,21K-F-C	RL 082.2477	
R235	RL 0,35W 10,0KOHM+-1%TK50 RESISTOR DRALORIC SMA0207/10K-F-D	RL 083.1297	
R236	RL 0,35W 2,21KOHM+-1%TK50 RESISTOR DRALORIC SMA 0207/2,21K-F-C	RL 082.2477	
R240	RL 0,35W 2,74KOHM+-1%TK50 RESISTOR DRALORIC SMA0207/2,74K-F-D	RL 083.0926	
R241	RL 0,35W 10,0KOHM+-1%TK50 RESISTOR DRALORIC SMA0207/10K-F-D	RL 083.1297	
R242	RL 0,35W 2,74KOHM+-1%TK50 RESISTOR DRALORIC SMA0207/2,74K-F-D	RL 083.0926	
R243	RL 0,35W 33,2KOHM+-1%TK50 RESISTOR DRALORIC SMA0207/33,2K-F-C	RL 083.1674	
R244	RL 0,35W 100KOHM+-1%TK50 RESISTOR DRALORIC SMA0207/100K-F-C	RL 082.1764	
R245	RL 0,35W 39,2KOHM+-1%TK50 RESISTOR DRALORIC SMA/207/39,2K-F-C	RL 083.1745	
R249	RL 0,35W 100 OHM+-1%TK50 METALFILM-RESISTOR DRALORIC SMA0207/100/HM-F-D	RL 082.6543	
R250	RL 0,35W 2,21KOHM+-1%TK50 RESISTOR DRALORIC SMA 0207/2,21K-F-C	RL 082.2477	
R251	RL 0,35W 1KOHM+-1%TK50 RESISTOR DRALORIC SMA0207/1K-F-C	RL 082.2160	

ROHDE&SCHWARZ	ÄZ	Datum Date	Schaltteilliste für Parts list for	Sachnummer Stock Nr.	Blatt Page
	04	1087	ED HF-OSZILLATOR	802.8835.01 SA	21

Kennzeichen Component No.	Benennung/Beschreibung Designation	Sachnummer Stock No.	enthalten in contained in
R252	RL 0,35W 475 OHM+-1%TK50 RESISTOR DRALORIC SMA0207/475OHM-F-D	RL 083.0390	
R253	RL 0,35W 2,21KOHM+-1%TK50 RESISTOR DRALORIC SMA 0207/2,21K-F-C	RL 082.2477	
R254	RL 0,35W 2,21KOHM+-1%TK50 RESISTOR DRALORIC SMA 0207/2,21K-F-C	RL 082.2477	
R255	RL 0,35W 150 OHM+-1%TK50 RESISTOR DRALORIC SMA0207/150OHM-F-D	RL 082.9942	
R256	RL 0,35W 6,81KOHM+-1%TK50 RESISTOR DRALORIC SMA 0207/6,81K-F-C	RL 082.2560	
R257	RL 0,35W 1,82KOHM+-1%TK50 RESISTOR DRALORIC SMA0207/1,82K-F-C	RL 082.2277	
R258	RL 0,35W 100 OHM+-1%TK50 METALFILM-RESISTOR DRALORIC SMA0207/100/HM-F-D	RL 082.6543	
R259	RL 0,35W 274 OHM+-1%TK50 RESISTOR DRALORIC SMA0207/274OHM-F-D	RL 083.0178	
R260	RL 0,35W 3,92KOHM+-1%TK50 RESISTOR RESISTA MK2	RL 083.1039	
R261	RL 0,35W 3,92KOHM+-1%TK50 RESISTOR RESISTA MK2	RL 083.1039	
R262	RL 0,35W 475 OHM+-1%TK50 RESISTOR DRALORIC SMA0207/475OHM-F-D	RL 083.0390	
R263	RL 0,35W 10,0KOHM+-1%TK50 RESISTOR DRALORIC SMA0207/10K-F-D	RL 083.1297	
R264	RL 0,35W 1KOHM+-1%TK50 RESISTOR DRALORIC SMA0207/1K-F-C	RL 082.2160	
R265	RL 0,35W 1KOHM+-1%TK50 RESISTOR DRALORIC SMA0207/1K-F-C	RL 082.2160	
R266	RL 0,35W 100 OHM+-1%TK50 METALFILM-RESISTOR DRALORIC SMA0207/100/HM-F-D	RL 082.6543	
R267	RL 0,35W 1KOHM+-1%TK50 RESISTOR DRALORIC SMA0207/1K-F-C	RL 082.2160	
R300	RL 0,35W 221 OHM+-1%TK50 RESISTOR DRALORIC SMA0207/221OHM-F-D	RL 083.0084	
R302	RG 26,1 OHM+-2%TK200 1206 CHIP RESISTOR DRALORIC CGB3216 26,1OHM2% TK	006.8749	
R303	RG 82,5 OHM+-1%TK100 1206 CHIP RESISTOR DALE CRCW1206 82,5OHM F T	RG 006.8861	

Kennzeichen Component No.	Benennung/Beschreibung Designation	Sachnummer Stock No.	enthalten in contained in
R310	RL 0,35W 1KOHM+-1%TK50 RESISTOR DRALORIC SMA0207/1K-F-C	RL 082.2160	
R311	RL 0,35W 1KOHM+-1%TK50 RESISTOR DRALORIC SMA0207/1K-F-C	RL 082.2160	
R312	RL 0,35W 1KOHM+-1%TK50 RESISTOR DRALORIC SMA0207/1K-F-C	RL 082.2160	
R315	RL 0,35W 681 OHM+-1%TK50 RESISTOR DRALORIC SMA0207/681OHM-F-D	RL 083.0490	
R316	RL 0,35W 1,50KOHM+-1%TK50 RESISTOR DRALORIC SMA0207/1,50K-F-D	RL 083.0732	
R320	RL 0,35W 475 OHM+-1%TK50 RESISTOR DRALORIC SMA0207/475OHM-F-D	RL 083.0390	
R333	RL 0,35W 2,21KOHM+-1%TK50 RESISTOR DRALORIC SMA 0207/2,21K-F-C	RL 082.2477	
R334	RL 0,35W 4,75KOHM+-1%TK50 RESISTOR DRALORIC SMA0207/4,75K-F-D	RL 083.1097	
R400	RL 0,35W 100KOHM+-1%TK50 RESISTOR DRALORIC SMA0207/100K-F-C	RL 082.1764	
R401	RL 0,35W 1KOHM+-1%TK50 RESISTOR DRALORIC SMA0207/1K-F-C	RL 082.2160	
R402	RL 0,35W 10,0KOHM+-1%TK50 RESISTOR DRALORIC SMA0207/10K-F-D	RL 083.1297	
R403	RL 0,35W 10,0KOHM+-1%TK50 RESISTOR DRALORIC SMA0207/10K-F-D	RL 083.1297	
R404	RL 0,35W 1KOHM+-1%TK50 RESISTOR DRALORIC SMA0207/1K-F-C	RL 082.2160	
R405	RL 0,35W 100KOHM+-1%TK50 RESISTOR DRALORIC SMA0207/100K-F-C	RL 082.1764	
R406	RL 0,35W 10,0KOHM+-1%TK50 RESISTOR DRALORIC SMA0207/10K-F-D	RL 083.1297	
R407	RL 0,35W 100KOHM+-1%TK50 RESISTOR DRALORIC SMA0207/100K-F-C	RL 082.1764	
R410	RL 0,35W 27,4KOHM+-1%TK50 RESISTOR DRALORIC SMA 0207/27,4K-F-C	RL 082.2583	
R411	RL 0,35W 3,32KOHM+-1%TK50 RESISTOR DRALORIC SMA0207/3,32K-F-D	RL 083.0990	
R412	RL 0,35W 33,2KOHM+-1%TK50 RESISTOR DRALORIC SMA0207/33,2K-F-C	RL 083.1674	

Kennzeichen Component No.	Benennung/Beschreibung Designation	Sachnummer Stock No.	enthalten in contained in
R420	RL 0,35W 10,0KOHM+-1%TK50 RESISTOR DRALORIC SMA0207/10K-F-D	RL 083.1297	
R425	RL 0,35W 15,0KOHM+-1%TK50 RESISTOR DRALORIC SMA0207/15K-F-D	RL 083.1400	
R428	RL 0,35W 1,82KOHM+-1%TK50 RESISTOR DRALORIC SMA0207/1,82K-F-C	RL 082.2277	
R429	RL 0,35W 10,0KOHM+-1%TK50 RESISTOR DRALORIC SMA0207/10K-F-D	RL 083.1297	
R430	RL 0,35W 47,5KOHM+-1%TK50 RESISTOR DRALORIC SMA/207/47,5K-F-C	RL 083.1800	
R440	RL 0,35W 2,21KOHM+-1%TK50 RESISTOR DRALORIC SMA 0207/2,21K-F-C	RL 082.2477	
R441	RL 0,35W 33,2KOHM+-1%TK50 RESISTOR DRALORIC SMA0207/33,2K-F-C	RL 083.1674	
R442	RL 0,35W 20,0KOHM+-1%TK50 RESISTOR DRALORIC SMA/207/20K-F-C	RL 083.1522	
R445	RL 0,35W 1KOHM+-1%TK50 RESISTOR DRALORIC SMA0207/1K-F-C	RL 082.2160	
R450	RL 0,35W 100KOHM+-1%TK50 RESISTOR DRALORIC SMA0207/100K-F-C	RL 082.1764	
R451	RL 0,35W 22,1KOHM+-1%TK50 RESISTOR DRALORIC SMA/207/22,1K-F-C	RL 083.1545	
R460	RL 0,35W 10,0KOHM+-1%TK50 RESISTOR DRALORIC SMA0207/10K-F-D	RL 083.1297	
R461	RL 0,35W 10,0KOHM+-1%TK50 RESISTOR DRALORIC SMA0207/10K-F-D	RL 083.1297	
R500	RG 34,8 OHM+-2%TK200 1206 CHIP RESISTOR DRALORIC CGB3216 34,8OHM2% TK	006.8778	
R501	RG 4,64KOHM+-2%TK200 1206 CHIP RESISTOR DRALORIC CGB 3216 4,64KOHM 2%	007.0712	
R502	RG 2,37KOHM+-2%TK200 1206 CHIP RESISTOR DRALORIC CGB 3216 2,37KOHM 2%	007.0641	
R503	RG 3,32KOHM+-1%TK100 1206 RESISTOR CHIP DALE CRCW1206 3,32KOHM FT	RG 007.5789	
R504	RL 0,35W 100 OHM+-1%TK50 METALFILM-RESISTOR DRALORIC SMA0207/100/HM-F-D	RL 082.6543	
R505	RL 0,35W 825 OHM+-1%TK50 RESISTOR DRALORIC SMA 0207/825OHM-F-C	RL 082.2502	

Kennzeichen Component No.	Benennung/Beschreibung Designation	Sachnummer Stock No.	enthalten in contained in
R506	RL 0,35W 5,62KOHM+-1%TK50 RESISTOR DRALORIC SMA0207/5,62K-F-C	RL 082.2190	
R509	RL 0,21W 82 OHM2% UNGEW. RESISTOR RESISTA MK1 82OHM 2% UNGEW.	RL 092.5940	
R510	RG 383 OHM+-2%TK200 1206 CHIP RESISTOR DRALORIC CGB3216 383OHM2% TK	006.9022	
R512	RL 0,35W 10,0KOHM+-1%TK50 RESISTOR DRALORIC SMA0207/10K-F-D	RL 083.1297	
R513	RL 0,35W 10,0KOHM+-1%TK50 RESISTOR DRALORIC SMA0207/10K-F-D	RL 083.1297	
R520	RG 215 OHM+-2%TK200 1206 CHIP RESISTOR DRALORIC CGB3216 215OHM2% TK	006.8961	
R521	RG 681 OHM+-1%TK100 1206 CHIP RESISTOR DALE CRCW1206 681OHM F T	RG 006.9080	
R522	RG 681 OHM+-1%TK100 1206 CHIP RESISTOR DALE CRCW1206 681OHM F T	RG 006.9080	
R525	RG 681 OHM+-1%TK100 1206 CHIP RESISTOR DALE CRCW1206 681OHM F T	RG 006.9080	
R530	RG 681 OHM+-1%TK100 1206 CHIP RESISTOR DALE CRCW1206 681OHM F T	RG 006.9080	
R531	RG 681 OHM+-1%TK100 1206 CHIP RESISTOR DALE CRCW1206 681OHM F T	RG 006.9080	
R532	RG 681 OHM+-1%TK100 1206 CHIP RESISTOR DALE CRCW1206 681OHM F T	RG 006.9080	
R540	RL 0,35W 221 OHM+-1%TK50 RESISTOR DRALORIC SMA0207/221OHM-F-D	RL 083.0084	
R541	RL 0,35W 3,92KOHM+-1%TK50 RESISTOR RESISTA MK2	RL 083.1039	
R542	RL 0,35W 6,81KOHM+-1%TK50 RESISTOR DRALORIC SMA 0207/6,81K-F-C	RL 082.2560	
R543	RL 0,35W 221 OHM+-1%TK50 RESISTOR DRALORIC SMA0207/221OHM-F-D	RL 083.0084	
R560	RL 0,35W 100 OHM+-1%TK50 METALFILM-RESISTOR DRALORIC SMA0207/100/HM-F-D	RL 082.6543	
R570	RL 0,35W 681 OHM+-1%TK50 RESISTOR DRALORIC SMA0207/681OHM-F-D	RL 083.0490	
R571	RL 0,35W 681 OHM+-1%TK50 RESISTOR DRALORIC SMA0207/681OHM-F-D	RL 083.0490	

Kennzeichen Component No.	Benennung/Beschreibung Designation	Sachnummer Stock No.	enthalten in contained in
R575	RL 0,35W 681 OHM+-1%TK50 RESISTOR DRALORIC SMA0207/681OHM-F-D	RL 083.0490	
R578	RL 0,35W 1KOHM+-1%TK50 RESISTOR DRALORIC SMA0207/1K-F-C	RL 082.2160	
R579	RG 562 OHM+-1%TK100 1206 CHIP RESISTOR DALE CRCW1206 562OHM F T	RG 006.9068	
R580	RL 0,35W 221 OHM+-1%TK50 RESISTOR DRALORIC SMA0207/221OHM-F-D	RL 083.0084	
R581	RL 0,35W 1KOHM+-1%TK50 RESISTOR DRALORIC SMA0207/1K-F-C	RL 082.2160	
R582	RL 0,35W 1KOHM+-1%TK50 RESISTOR DRALORIC SMA0207/1K-F-C	RL 082.2160	
R583	RL 0,35W 100 OHM+-1%TK50 METALFILM-RESISTOR DRALORIC SMA0207/100/HM-F-D	RL 082.6543	
R590	RL 0,35W 100 OHM+-1%TK50 METALFILM-RESISTOR DRALORIC SMA0207/100/HM-F-D	RL 082.6543	
R591	RL 0,35W 22,1KOHM+-1%TK50 RESISTOR DRALORIC SMA/207/22,1K-F-C	RL 083.1545	
R592	RL 0,35W 475 KOHM+-1%TK50 RESISTOR DRALORIC SMA0207/475K-F-C	RL 083.2593	
R593	RL 0,35W 10,0KOHM+-1%TK50 RESISTOR DRALORIC SMA0207/10K-F-D	RL 083.1297	
R594	RG 2,15KOHM+-2%TK200 1206 CHIP RESISTOR DRALORIC CGB 3216 2,15KOHM 2%	007.0635	
R595	RL 0,35W 100 OHM+-1%TK50 METALFILM-RESISTOR DRALORIC SMA0207/100/HM-F-D	RL 082.6543	
R597	RL 0,35W 100 OHM+-1%TK50 METALFILM-RESISTOR DRALORIC SMA0207/100/HM-F-D	RL 082.6543	
R600	RL 0,35W22,10 OHM+-1%TK50 RESISTOR DRALORIC SMA0207/22,1OHM-F-D	RL 082.9188	
R601	RL 0,35W 221 OHM+-1%TK50 RESISTOR DRALORIC SMA0207/221OHM-F-D	RL 083.0084	
R602	RL 0,35W 1KOHM+-1%TK50 RESISTOR DRALORIC SMA0207/1K-F-C	RL 082.2160	
R603	RL 0,35W 1KOHM+-1%TK50 RESISTOR DRALORIC SMA0207/1K-F-C	RL 082.2160	
R604	RL 0,35W 1KOHM+-1%TK50 RESISTOR DRALORIC SMA0207/1K-F-C	RL 082.2160	

Kennzeichen Component No.	Benennung/Beschreibung Designation	Sachnummer Stock No.	enthalten in contained in
R610	RL 0,35W 332 KOHM+-1%TK50 RESISTOR DRALORIC SMA0207/332K-F-C	RL 083.2441	
R611	RL 0,35W 332 KOHM+-1%TK50 RESISTOR DRALORIC SMA0207/332K-F-C	RL 083.2441	
R612	RL 0,35W 68,1KOHM+-1%TK50 RESISTOR DRALORIC SMA 0207/68,1K-F-C	RL 082.2602	
R620	RL 0,35W 68,1KOHM+-1%TK50 RESISTOR DRALORIC SMA 0207/68,1K-F-C	RL 082.2602	
R630	RL 0,35W 10,0KOHM+-1%TK50 RESISTOR DRALORIC SMA0207/10K-F-D	RL 083.1297	
R631	RL 0,35W 2,74KOHM+-1%TK50 RESISTOR DRALORIC SMA0207/2,74K-F-D	RL 083.0926	
R632	RS 0,75W10KOHM+-10%CERMET DEPOS.-CARBON POTENTIOMET BOURNS 3006P-1-10 KOHM+-10%	RS 037.7396	
R633	RL 0,35W 2,74KOHM+-1%TK50 RESISTOR DRALORIC SMA0207/2,74K-F-D	RL 083.0926	
R640	RL 0,35W 100 OHM+-1%TK50 METALFILM-RESISTOR DRALORIC SMA0207/100/HM-F-D	RL 082.6543	
R642	RL 0,35W 15,0KOHM+-1%TK50 RESISTOR DRALORIC SMA0207/15K-F-D	RL 083.1400	
R650	RL 0,35W 332 OHM+-1%TK50 RESISTOR DRALORIC SMA0207/332OHM-F-D	RL 083.0255	
R651	RL 0,35W 15,0KOHM+-1%TK50 RESISTOR DRALORIC SMA0207/15K-F-D	RL 083.1400	
R652	RL 0,35W 10,0KOHM+-1%TK50 RESISTOR DRALORIC SMA0207/10K-F-D	RL 083.1297	
R653	RL 0,35W 1KOHM+-1%TK50 RESISTOR DRALORIC SMA0207/1K-F-C	RL 082.2160	
R654	RL 0,35W 10,0KOHM+-1%TK50 RESISTOR DRALORIC SMA0207/10K-F-D	RL 083.1297	
R655	RL 0,35W 10,0KOHM+-1%TK50 RESISTOR DRALORIC SMA0207/10K-F-D	RL 083.1297	
R656	RG 1000 OHM+-1%TK100 1206 CHIP RESISTOR DALE CRCW1206 1,0KOHM F T	RG 006.7271	
R660	RL 0,35W 2,74KOHM+-1%TK50 RESISTOR DRALORIC SMA0207/2,74K-F-D	RL 083.0926	
R661	RL 0,35W 10,0KOHM+-1%TK50 RESISTOR DRALORIC SMA0207/10K-F-D	RL 083.1297	

Kennzeichen Component No.	Benennung/Beschreibung Designation	Sachnummer Stock No.	enthalten in contained in
R665	RL 0,35W 33,2KOHM+-1%TK50 RESISTOR DRALORIC SMA0207/33,2K-F-C	RL 083.1674	
R666	RL 0,35W 1,82KOHM+-1%TK50 RESISTOR DRALORIC SMA0207/1,82K-F-C	RL 082.2277	
R667	RL 0,35W 100KOHM+-1%TK50 RESISTOR DRALORIC SMA0207/100K-F-C	RL 082.1764	
R668	RL 0,35W 3,32KOHM+-1%TK50 RESISTOR DRALORIC SMA0207/3,32K-F-D	RL 083.0990	
R669	RL 0,35W 39,2KOHM+-1%TK50 RESISTOR DRALORIC SMA/207/39,2K-F-C	RL 083.1745	
R671	RL 0,35W 4,75KOHM+-1%TK50 RESISTOR DRALORIC SMA0207/4,75K-F-D	RL 083.1097	
R672	RL 0,35W 10,0KOHM+-1%TK50 RESISTOR DRALORIC SMA0207/10K-F-D	RL 083.1297	
V12	AE BZX79/C5V1 0,5W Z-DI ZENER DIODE VALVO BZX79/C5V1	AE 012.2449	
V21	AE BB809 26/ 6PF CDI TUNING DIODE VALVO BB809	AE 092.9616	
V22	AE BB809 26/ 6PF CDI TUNING DIODE VALVO BB809	AE 092.9616	
V30	AK BFR96 NPN 15V 75MA TRANSISTOR VALVO BFR96	AK 093.2738	
V40	AK BC173C NPN 25V 100MA TRANSISTOR INTERMETAL BC173C	010.4444	
V45	AK BC173C NPN 25V 100MA TRANSISTOR INTERMETAL BC173C	010.4444	
V48	AK BC253C PNP 25V 100MA TRANSISTOR INTERMETAL BC253C	010.2829	
V50	AK BC253C PNP 25V 100MA TRANSISTOR INTERMETAL BC253C	010.2829	
V51	AE BB809 26/ 6PF CDI TUNING DIODE VALVO BB809	AE 092.9616	
V52	AE BB809 26/ 6PF CDI TUNING DIODE VALVO BB809	AE 092.9616	
V60	AK BFR96 NPN 15V 75MA TRANSISTOR VALVO BFR96	AK 093.2738	

Kennzeichen Component No.	Benennung/Beschreibung Designation	Sachnummer Stock No.	enthalten in contained in
V70	AK BC173C NPN 25V 100MA TRANSISTOR INTERMETAL BC173C	010.4444	
V75	AK BC173C NPN 25V 100MA TRANSISTOR INTERMETAL BC173C	010.4444	
V78	AK BC253C PNP 25V 100MA TRANSISTOR INTERMETAL BC253C	010.2829	
V81	AE BB809 26/ 6PF CDI TUNING DIODE VALVO BB809	AE 092.9616	
V82	AE BB809 26/ 6PF CDI TUNING DIODE VALVO BB809	AE 092.9616	
V90	AK BFR96 NPN 15V 75MA TRANSISTOR VALVO BFR96	AK 093.2738	
V100	AK BC173C NPN 25V 100MA TRANSISTOR INTERMETAL BC173C	010.4444	
V105	AK BC173C NPN 25V 100MA TRANSISTOR INTERMETAL BC173C	010.4444	
V108	AK BC253C PNP 25V 100MA TRANSISTOR INTERMETAL BC253C	010.2829	
V115	AD BAV99 2X70V 0,1 A UDI DIODE VALVO BAV99	911.0092	
V145	AD BAV99 2X70V 0,1 A UDI DIODE VALVO BAV99	911.0092	
V158	BM MAR8 BB.AMPL BROADBAND AMPLIFIER MCL MAR8	656.4720	
V162	AE BAR18 SCHOTTKYDI DIODE THOMSON BAR18	007.3440	
V175	AD BAV99 2X70V 0,1 A UDI DIODE VALVO BAV99	911.0092	
V200	AK 2N2369A NPN 15V 200MA TRANSISTOR VALVO 2N2369A	AK 010.4680	
V210	AD 1N4448 75V 0,15A UDI DIODE TEXAS INST 1N4448 GEGURTET	AD 012.0700	
V211	AD 1N4448 75V 0,15A UDI DIODE TEXAS INST 1N4448 GEGURTET	AD 012.0700	
V220	AD 1N4448 75V 0,15A UDI DIODE TEXAS INST 1N4448 GEGURTET	AD 012.0700	
V230	AK BC173C NPN 25V 100MA TRANSISTOR INTERMETAL BC173C	010.4444	

Kennzeichen Component No.	Benennung/Beschreibung Designation	Sachnummer Stock No.	enthalten in contained in
V232	AE BB809 26/ 6PF CDI TUNING DIODE VALVO BB809	AE 092.9616	
V233	AD 1N4448 75V 0,15A UDI DIODE TEXAS INST 1N4448 GEGURTET	AD 012.0700	
V400	AE BAV45 35V PICOAMP.DI LOW LEAKAGE DIODE VALVO BAV45	AE 252.5386	
V401	AE BAV45 35V PICOAMP.DI LOW LEAKAGE DIODE VALVO BAV45	AE 252.5386	
V402	AE BAV45 35V PICOAMP.DI LOW LEAKAGE DIODE VALVO BAV45	AE 252.5386	
V403	AE BAV45 35V PICOAMP.DI LOW LEAKAGE DIODE VALVO BAV45	AE 252.5386	
V405	AK BC173C NPN 25V 100MA TRANSISTOR INTERMETAL BC173C	010.4444	
V412	AE BZX79/C10 0,5W Z-DI ZENER DIODE VALVO BZX79/C10	AE 012.2510	
V420	AK BC253C PNP 25V 100MA TRANSISTOR INTERMETAL BC253C	010.2829	
V425	AK BC173C NPN 25V 100MA TRANSISTOR INTERMETAL BC173C	010.4444	
V460	AD 1N4448 75V 0,15A UDI DIODE TEXAS INST 1N4448 GEGURTET	AD 012.0700	
V500	AK BFY90 NPN 15V 25MA TRANSISTOR VALVO BFY90	AK 010.4550	
V506	AE 5082-2800 SCHOTTKYDI DIODE HEWLETT-P. 5082-2800	AE 012.9066	
V512	AE BB909B 25/ 3PF CDI TUNING DIODE VALVO BB909B	AE 092.9600	
V550	AK BFY90 NPN 15V 25MA TRANSISTOR VALVO BFY90	AK 010.4550	
V590	AD 1N4448 75V 0,15A UDI DIODE TEXAS INST 1N4448 GEGURTET	AD 012.0700	
V650	AL BD438 PNP 45V 4A0 TRANSISTOR VALVO BD438	AL 010.0403	
V651	AK BC173C NPN 25V 100MA TRANSISTOR INTERMETAL BC173C	010.4444	
V652	AK BC173C NPN 25V 100MA TRANSISTOR INTERMETAL BC173C	010.4444	

Kennzeichen Component No.	Benennung/Beschreibung Designation	Sachnummer Stock No.	enthalten in contained in
V670	AD 1N4448 75V 0,15A UDI DIODE TEXAS INST 1N4448 GEGURTET	AD 012.0700	
V671	AK BC173C NPN 25V 100MA TRANSISTOR INTERMETAL BC173C	010.4444	
V672	AD 1N4448 75V 0,15A UDI DIODE TEXAS INST 1N4448 GEGURTET	AD 012.0700	
W1	DX HF-KABEL	802.6578	802.6455
X1	FP STECKERLEISTE 32POL. MULTIPOINT CONNECTOR PANDUIT 100-232-033/999	FP 514.4550	
X2	VL WIRE-WRAP PIN WIRE-WRAP PIN BERG NR. 75 403-003	VL 088.4542	
X3	VL WIRE-WRAP PIN WIRE-WRAP PIN BERG NR. 75 403-003	VL 088.4542	
X4	VL WIRE-WRAP PIN WIRE-WRAP PIN BERG NR. 75 403-003	VL 088.4542	
X6	VL WIRE-WRAP PIN WIRE-WRAP PIN BERG NR. 75 403-003	VL 088.4542	
X7	VL WIRE-WRAP PIN WIRE-WRAP PIN BERG NR. 75 403-003 2-POLIG	VL 088.4542	
X8	VL WIRE-WRAP PIN WIRE-WRAP PIN BERG NR. 75 403-003 2-POLIG	VL 088.4542	
X9	VL WIRE-WRAP PIN WIRE-WRAP PIN BERG NR. 75 403-003 3-POLIG	VL 088.4542	
X11	VL WIRE-WRAP PIN WIRE-WRAP PIN BERG NR. 75 403-003 2-POLIG	VL 088.4542	
X12	VL WIRE-WRAP PIN WIRE-WRAP PIN BERG NR. 75 403-003 2-POLIG	VL 088.4542	
X302	FJ EINBAUSTECKER SYST.SMB ANGLE CONNECTOR ROSENBERG R&S-ZCHNG.602.8804	FJ 602.8804	
X303	FJ EINBAUSTECKER SYST.SMB ANGLE CONNECTOR ROSENBERG R&S-ZCHNG.602.8804	FJ 602.8804	
X304	FJ EINBAUSTECKER SYST.SMB ANGLE CONNECTOR ROSENBERG R&S-ZCHNG.602.8804	FJ 602.8804	

ROHDE&SCHWARZ	ÄZ	Datum Date	Schaltteilliste für Parts list for	Sachnummer Stock Nr.	Blatt Page
	04	1087	ED HF-OSZILLATOR	802.8835.01 SA	31

Kennzeichen Component No.	Benennung/Beschreibung Designation	Sachnummer Stock No.	enthalten in contained in
X305	FJ EINBAUSTECKER SYST.SMB ANGLE CONNECTOR ROSENBERG R&S-ZCHNG.602.8804	FJ 602.8804	
X310	FJ EINBAUSTECKER SYST.SMB ANGLE CONNECTOR ROSENBERG R&S-ZCHNG.602.8804	FJ 602.8804	
Z2	LD 10GHZ 50DB100V10A4RDX9 LEAD THROUGH FILTER ERIE R&S-ZCHNG.451.4636	LD 451.4636	
BIS/TO Z8			
			- ENDE -

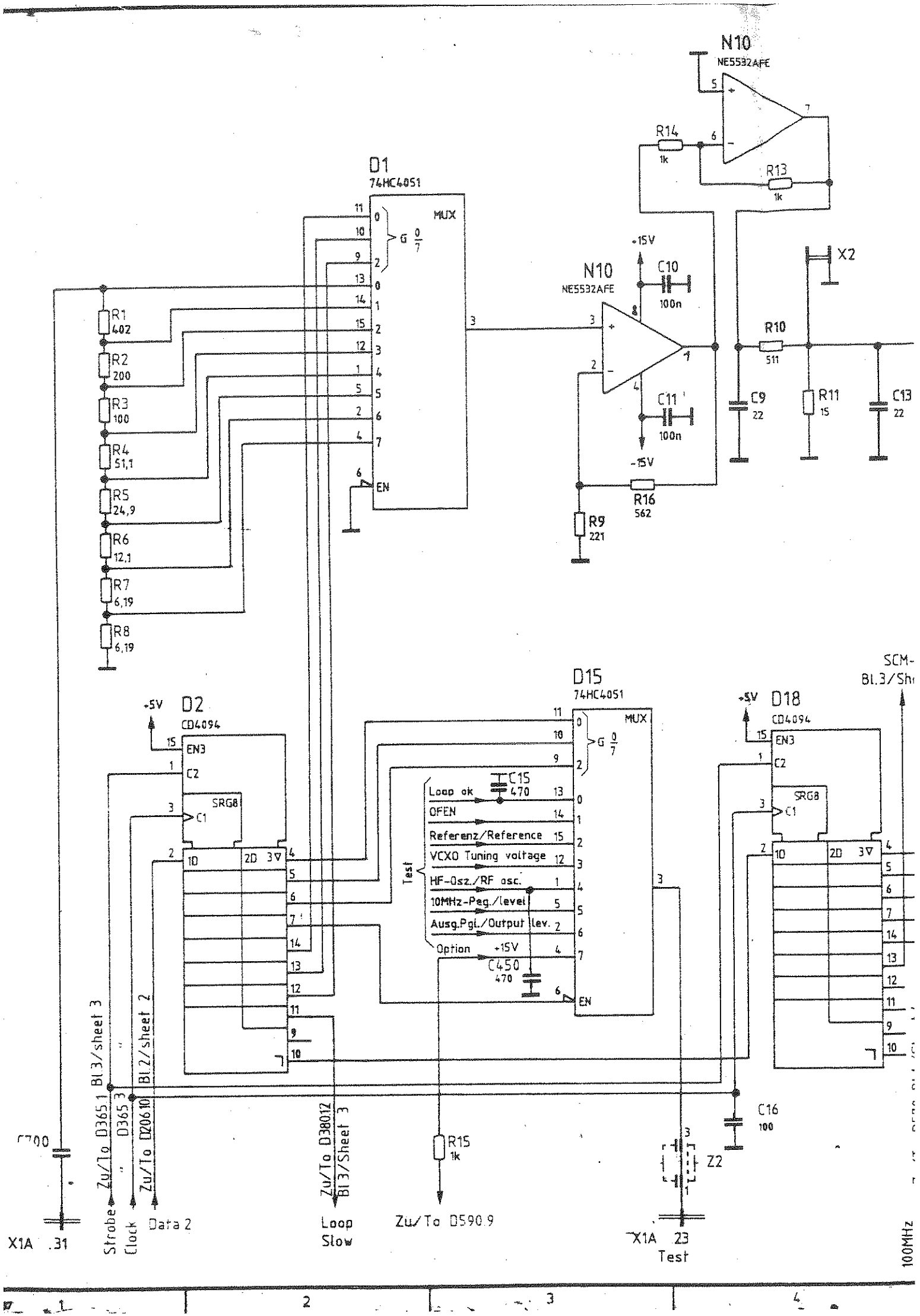
N10
NE5532AFE
R14
1k
R13
1k
D1
74HC4051
MUX
G 0/7
EN
R1
402
R2
200
R3
100
R4
51,1
R5
24,9
R6
12,1
R7
6,19
R8
6,19
+15V
C10
100n
N10
NE5532AFE
C11
100n
-15V
R16
562
R9
221
X2
R10
511
C9
22
R11
15
C13
22
D15
74HC4051
MUX
G 0/7
EN
Loop ok
C15
470
OFEN
Referenz/Reference
VCXO Tuning voltage
HF-Osz./RF osc.
10MHz-Peg./level
Ausg.Pgl./Output lev.
Option
+15V
C450
470
Test
D2
CD4094
+5V
EN3
C2
SRG8
C1
1D
2D
3∇
D18
CD4094
+5V
EN3
C2
SRG8
C1
1D
2D
3∇
SCM-
Bl.3/Sh
C16
100
Z2
R15
1k
C700
X1A .31
Strobe
Clock
Data 2
Zu/To D365 1
Zu/To D365 3
Zu/To D20610
Bl 3/sheet 3
Bl 2/sheet 2
Zu/To D38012
Bl 3/Sheet 3
Loop
Slow
Zu/To D590 9
X1A 23
Test
100MHz

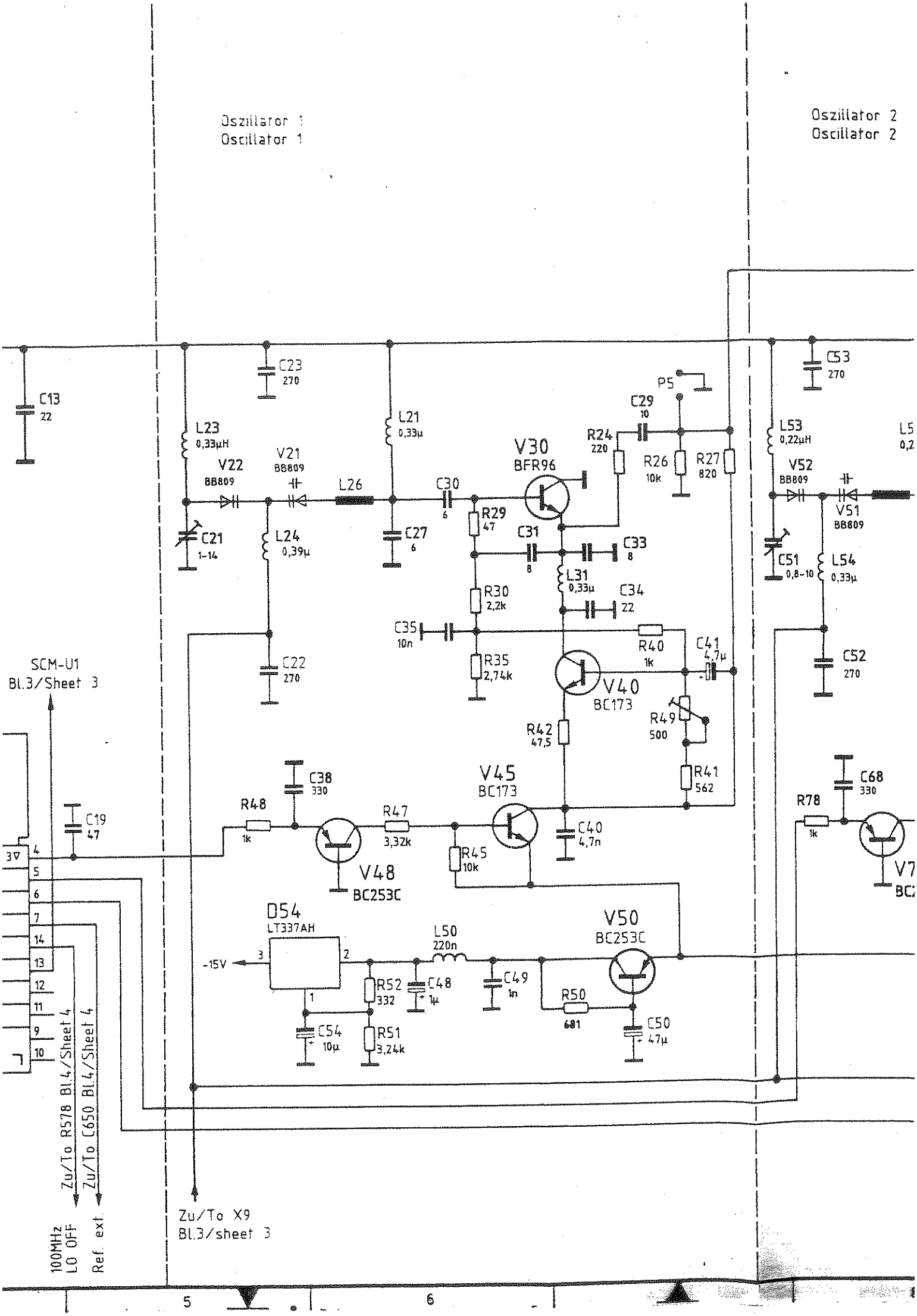
Oszillator 1
Oscillator 1
Oszillator 2
Oscillator 2
C13
22
C23
270
L23
0,33µH
V22
BB809
V21
BB809
L26
L21
0,33µ
C30
6
C27
6
C21
1-14
L24
0,39µ
C22
270
V30
BFR96
R29
47
C31
8
C33
8
L31
0,33µ
C34
22
R30
2,2k
C35
10n
R35
2,74k
R24
220
C29
10
P5
R26
10k
R27
820
R40
1k
C41
4,7µ
V40
BC173
R49
500
R42
47,5
R41
562
C40
4,7n
V45
BC173
C38
330
R48
1k
R47
3,32k
R45
10k
V48
BC253C
C19
47
D54
LT337AH
-15V
L50
220n
C49
1n
R52
332
C48
1µ
R51
3,24k
C54
10µ
V50
BC253C
R50
681
C50
47µ
C53
270
L53
0,22µH
V52
BB809
V51
BB809
C51
0,8-10
L54
0,33µ
C52
270
C68
330
R78
1k
V7
BC
SCM-U1
Bl.3/Sheet 3
3V
Zu/To R578 Bl.4/Sheet 4
Zu/To C650 Bl.4/Sheet 4
100MHz
LO OFF
Ref. ext.
Zu/To X9
Bl.3/sheet 3
5
6

Oszillator 3
Oscillator 3

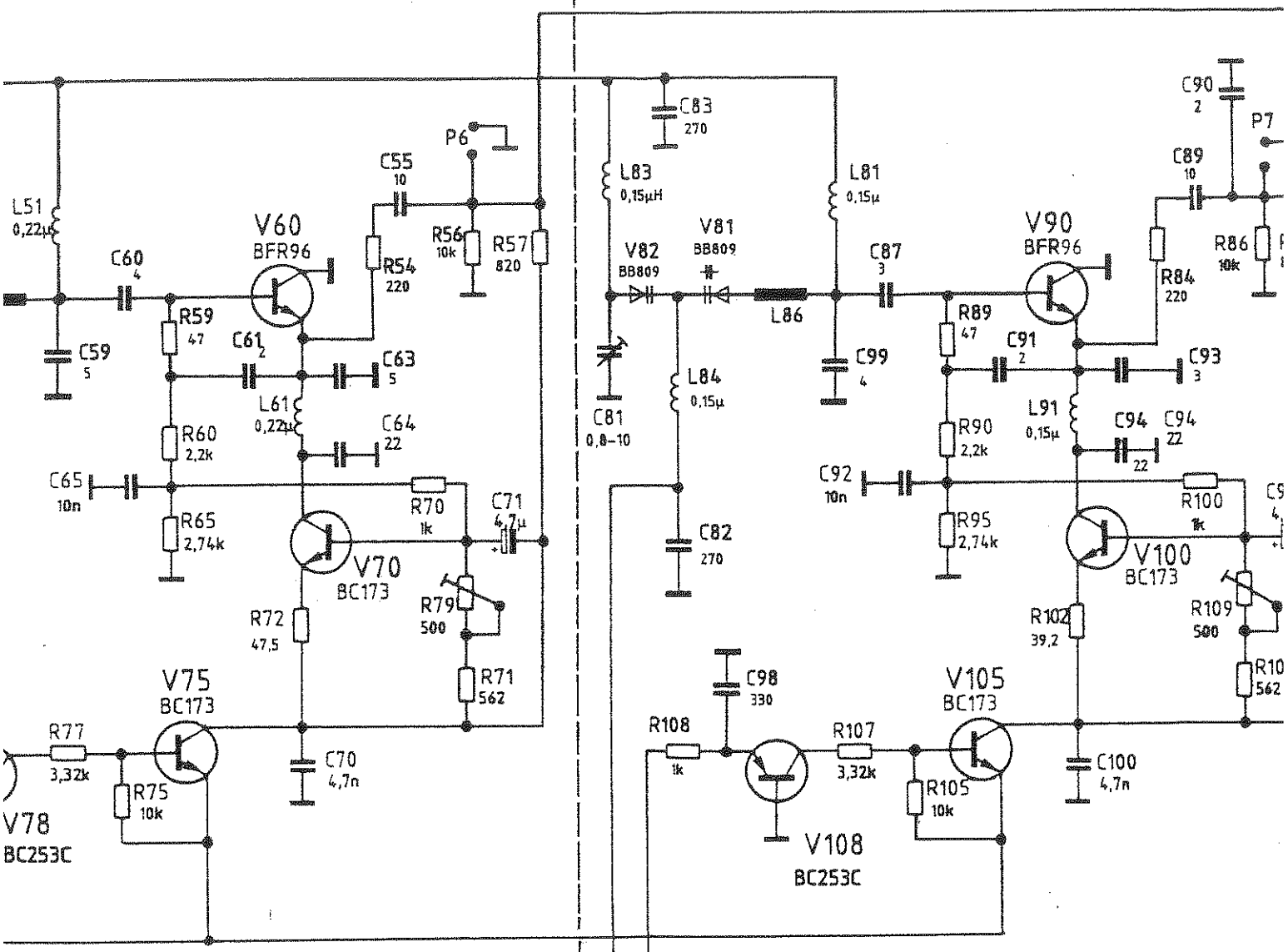

Klebekante für Druckerzeugnis; durch diese Zone möglichst nur Leitungen führen.

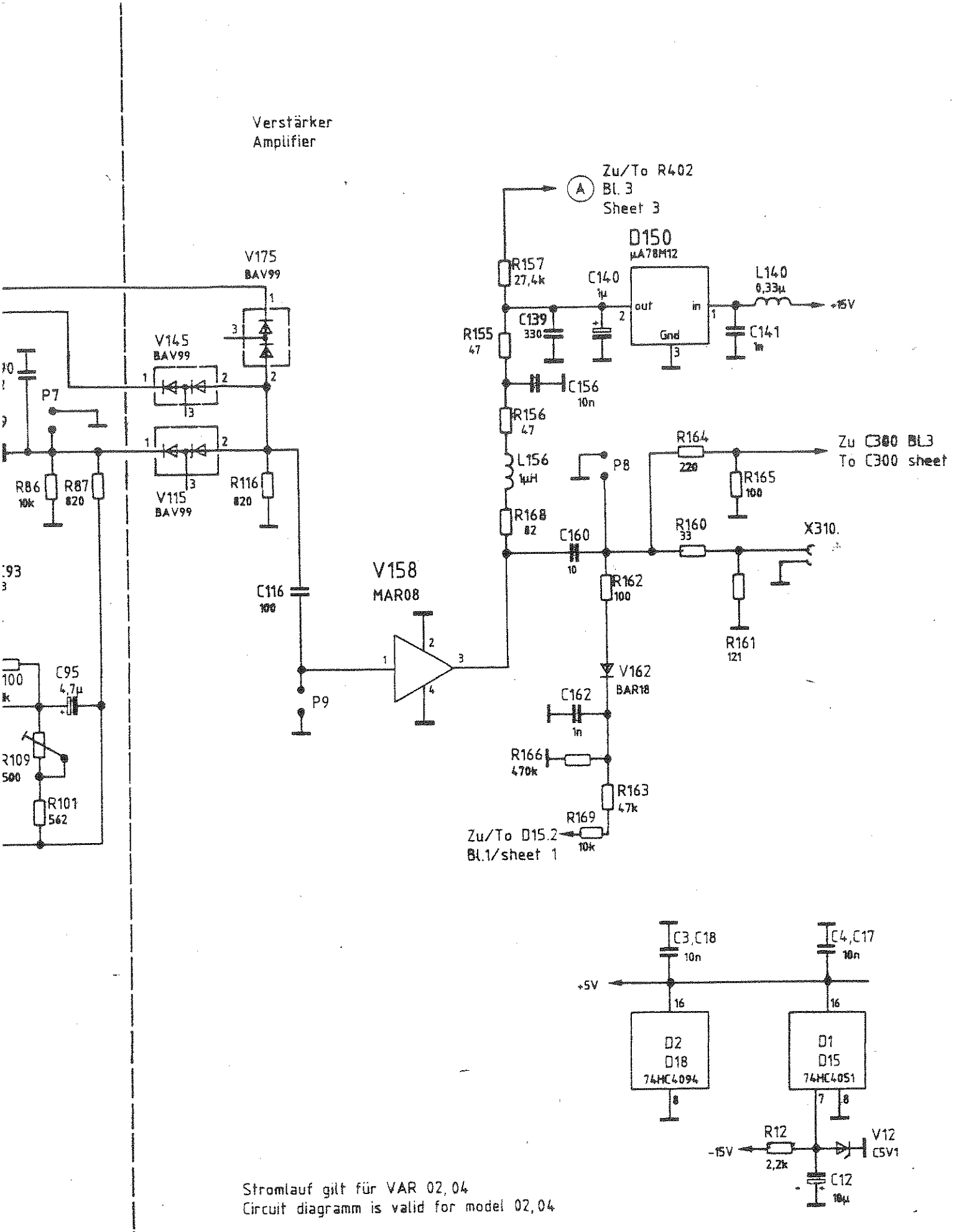

Stromlauf gilt für VAR 02, 04
Circuit diagramm is valid for model 02, 04

Stromlauf zu: HF-Oszillator / RF oscillator		Z	Zeichn.-Nr. 802. 8835
	reg. i. V. 802.2020 V	erste Z.	

12 13 14 15

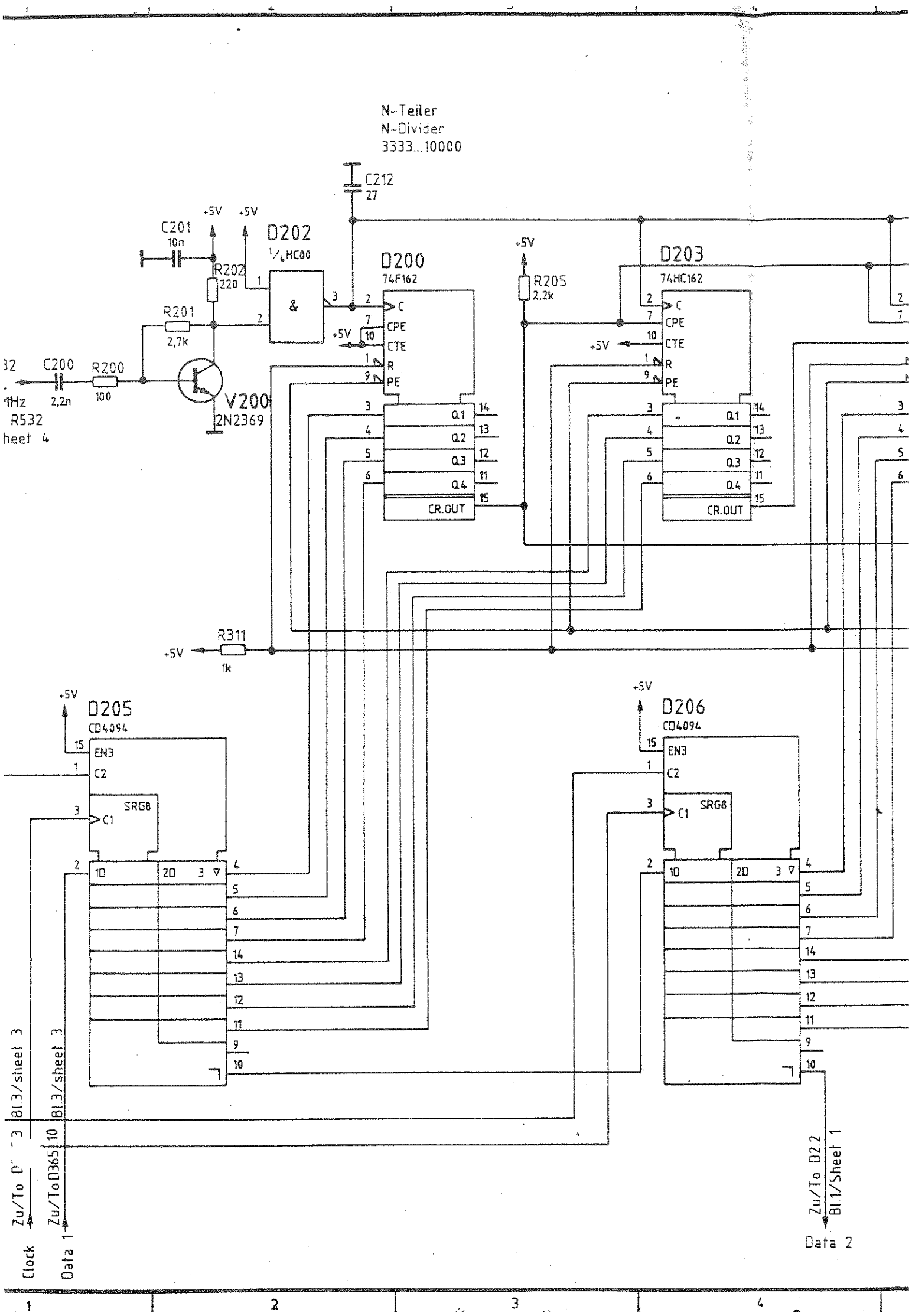
N-Teiler
N-Divider
3333...10000
C212
27
C201
10n
+5V
D202
1/4HC00
R202
220
R201
2,7k
C200
2,2n
R200
100
V200
2N2369
R532
heet 4
D200
74F162
C
CPE
CTE
R
PE
Q1
Q2
Q3
Q4
CR.OUT
R205
2,2k
D203
74HC162
R311
1k
D205
CD4094
EN3
C2
C1
SRG8
1D
2D
D206
CD4094
Zu/To D365
Zu/To D2.2
Bl.1/Sheet 1
Bl.3/sheet 3
Clock
Data 1
Data 2

Phasendetektor
Phase detector

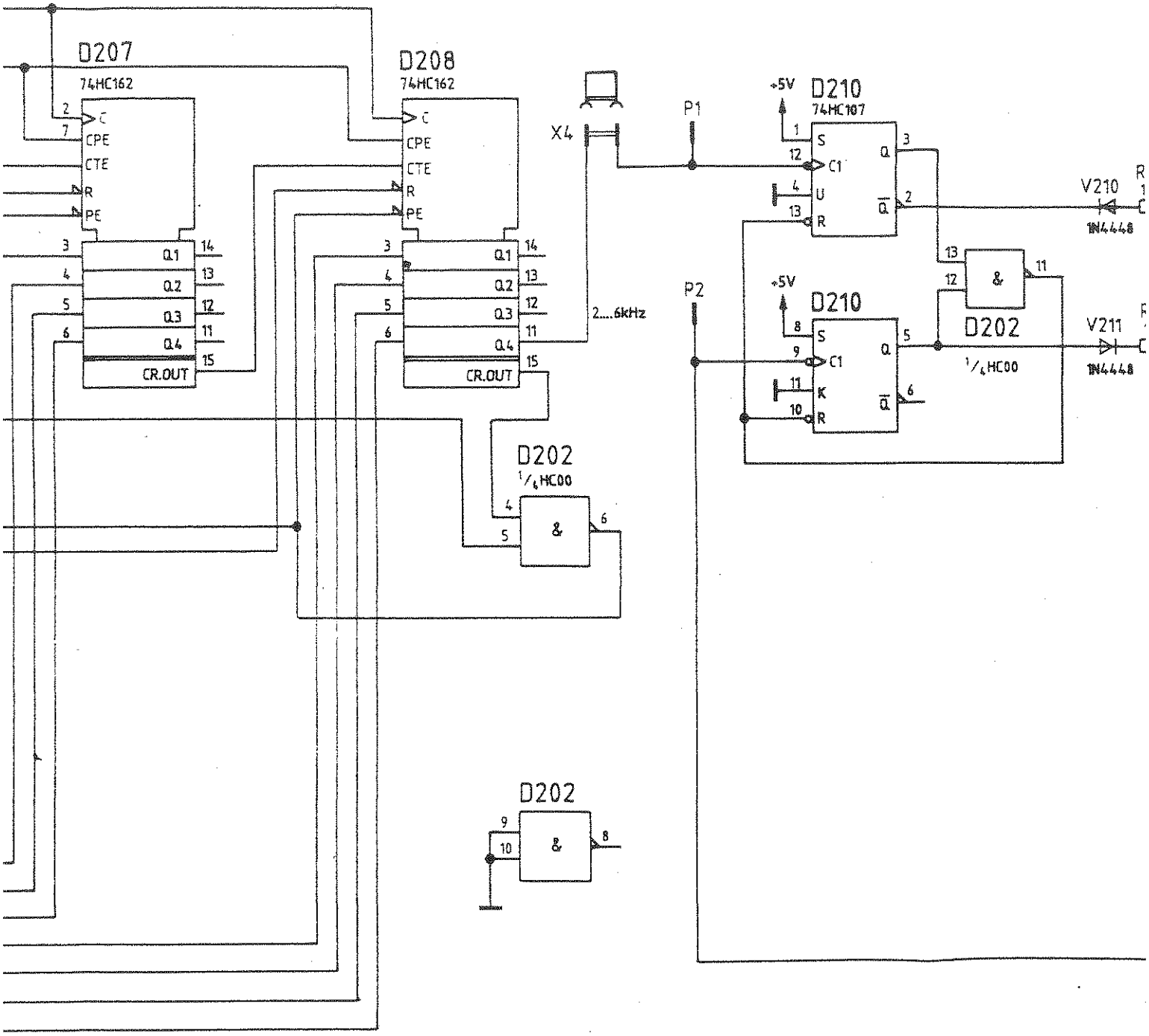

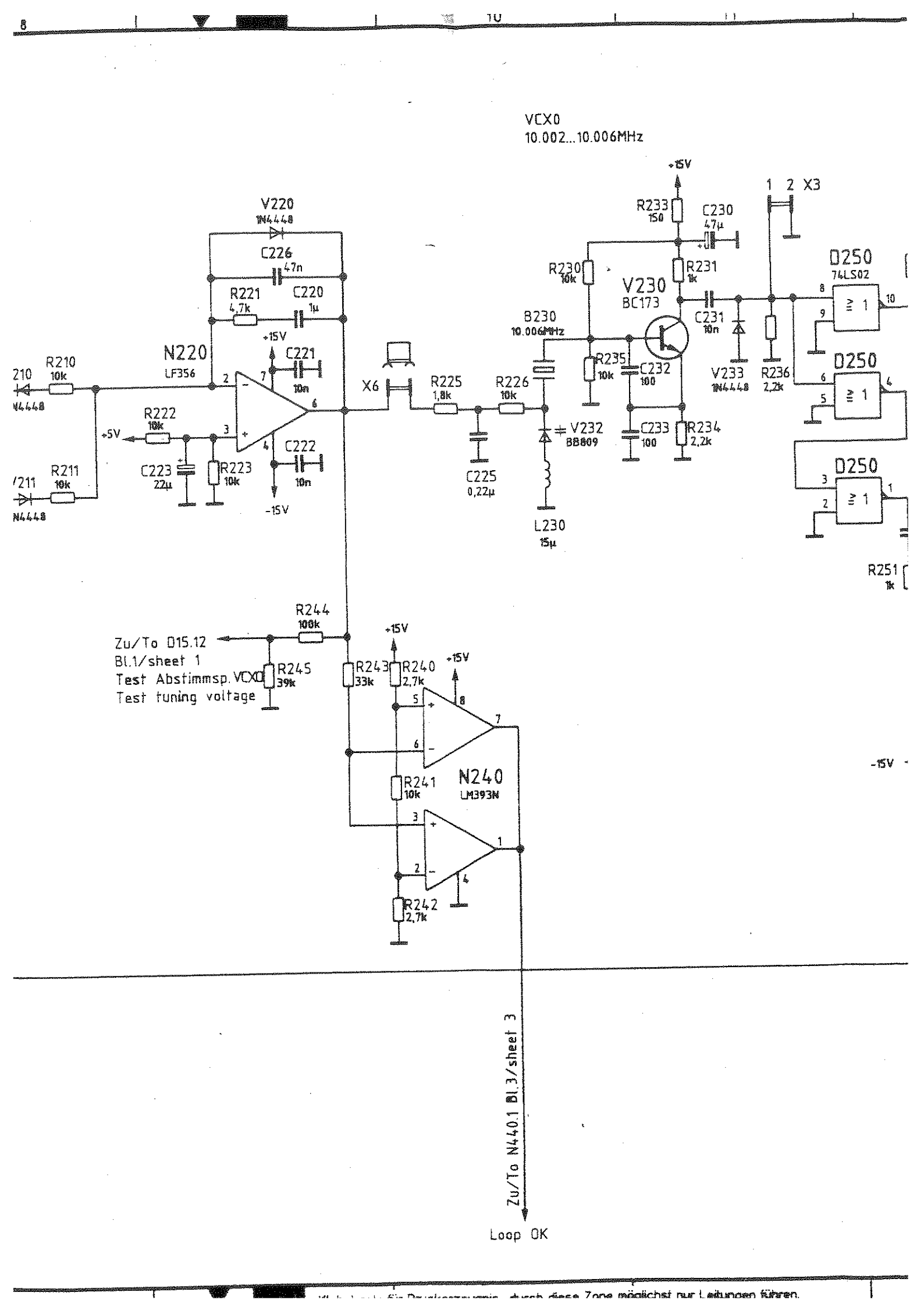
VCXO
10.002...10.006MHz
+15V
R233
150
C230
47µ
1 2 X3
V220
1N4448
C226
47n
R221
4,7k
C220
1µ
R230
10k
R231
1k
V230
BC173
D250
74LS02
≧ 1
B230
10.006MHz
C231
10n
V233
1N4448
R236
2,2k
N220
LF356
C221
10n
R210
10k
X6
R225
1,8k
R226
10k
R235
10k
C232
100
R222
10k
+5V
C222
10n
V232
BB809
C233
100
R234
2,2k
C223
22µ
R223
10k
C225
0,22µ
R211
10k
-15V
L230
15µ
R251
1k
R244
100k
Zu/To D15.12
Bl.1/sheet 1
Test Abstimmsp. VCXO
Test tuning voltage
R245
39k
R243
33k
R240
2,7k
N240
LM393N
R241
10k
R242
2,7k
Zu/To N440.1 Bl.3/sheet 3
Loop OK

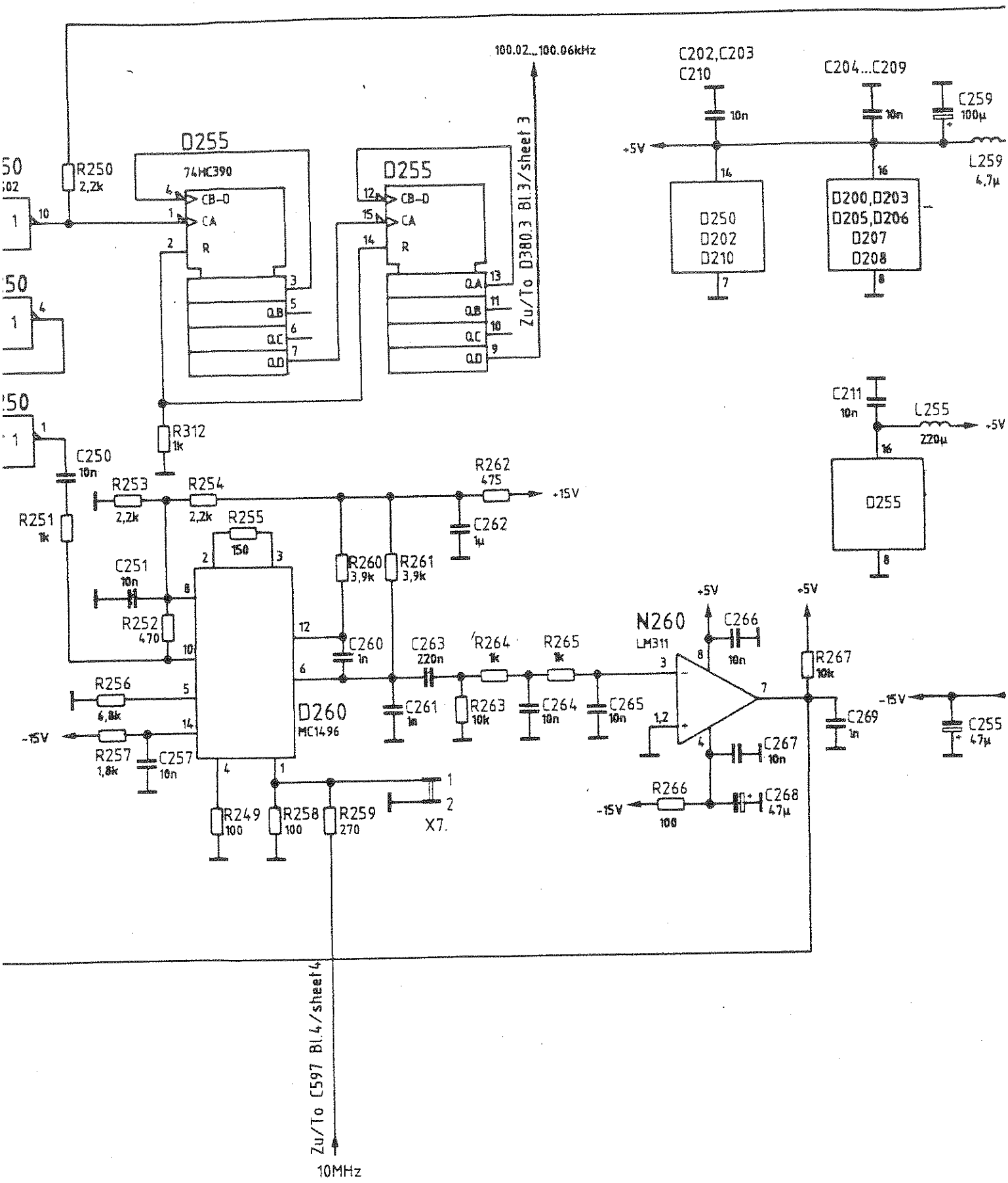

Stromlauf zu: HF-Oszillator / RF oscillator	Z	Zeichn.-Nr. 802. 8835	
reg. i. V. 802.2020 V	erste Z.		

12 13 14 15

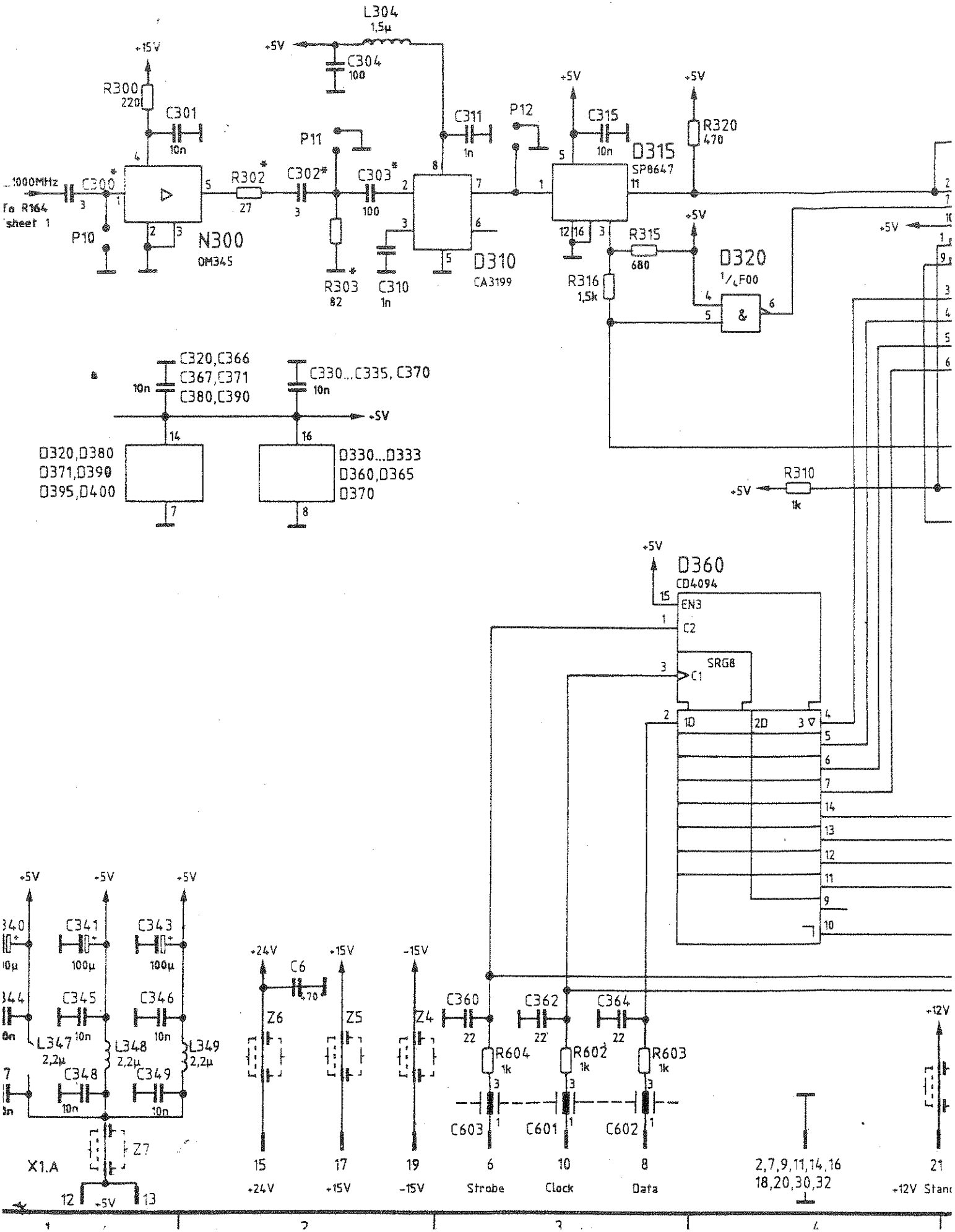
L304
1,5µ
+5V
C304
100
+15V
R300
220
C301
10n
P11
C311
1n
P12
C315
10n
D315
SP8647
R320
470
...1000MHz
C300*
To R164
sheet 1
P10
N300
OM345
R302*
27
C302*
3
C303*
100
R303*
82
C310
1n
D310
CA3199
R315
680
R316
1,5k
D320
1/4F00
&
C320,C366
C367,C371
C380,C390
10n
C330...C335, C370
D320,D380
D371,D390
D395,D400
D330...D333
D360,D365
D370
R310
1k
D360
CD4094
EN3
C2
SRG8
C1
1D
2D
3
C341
100µ
C343
100µ
C345
10n
C346
10n
L347
2,2µ
L348
2,2µ
L349
2,2µ
C348
10n
C349
10n
Z7
X1.A
+24V
C6
470
Z6
Z5
Z4
-15V
C360
22
C362
22
C364
22
R604
1k
R602
1k
R603
1k
C603
C601
C602
+12V
15
+24V
17
+15V
19
-15V
6
Strobe
10
Clock
8
Data
2,7,9,11,14,16
18,20,30,32
21
+12V Stand

M-Teiler
M-Divider
M = 2499....4999

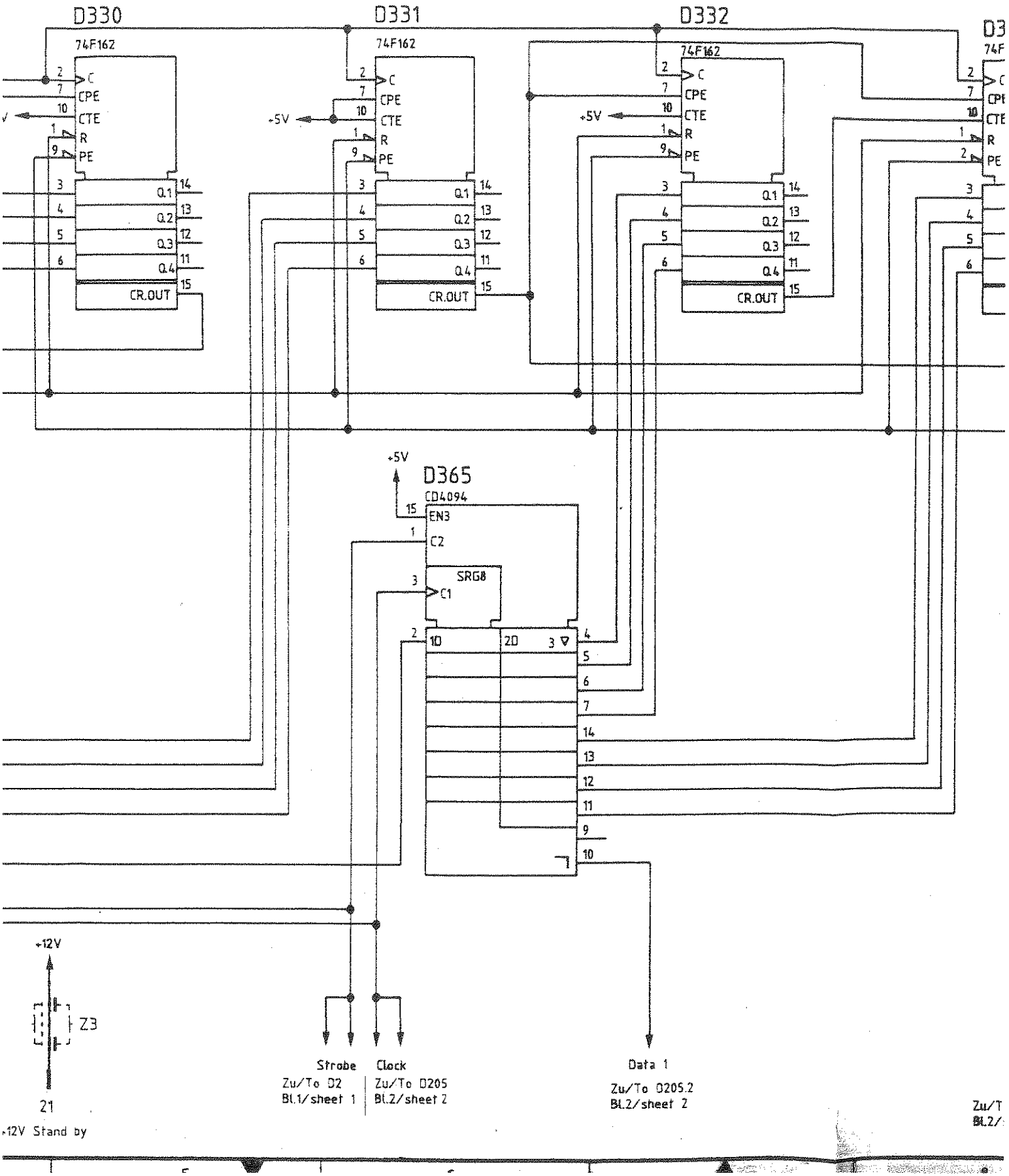

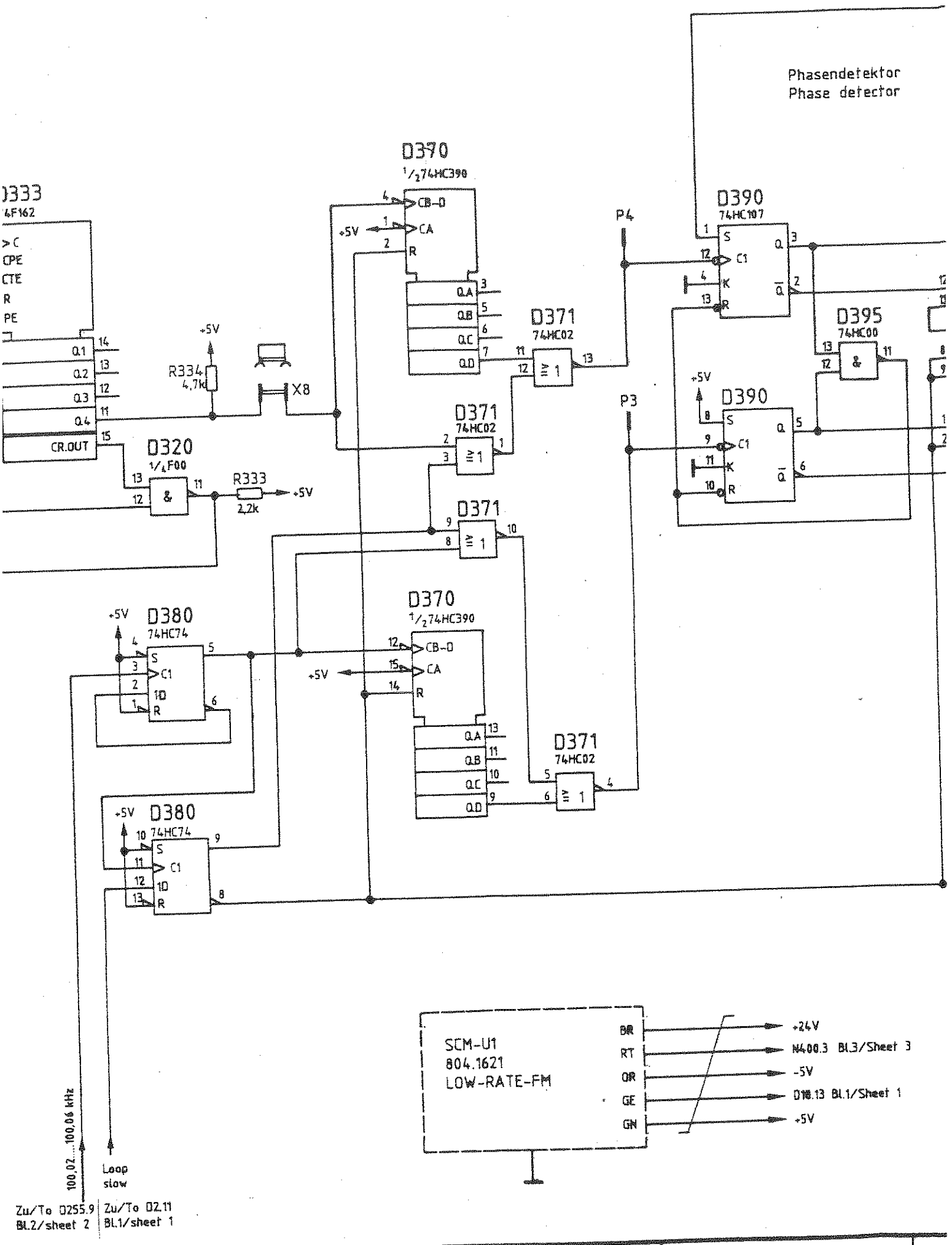

Klebekante für Druckerzeugnis : durch diese Zone möglichst nur Leitungen führen

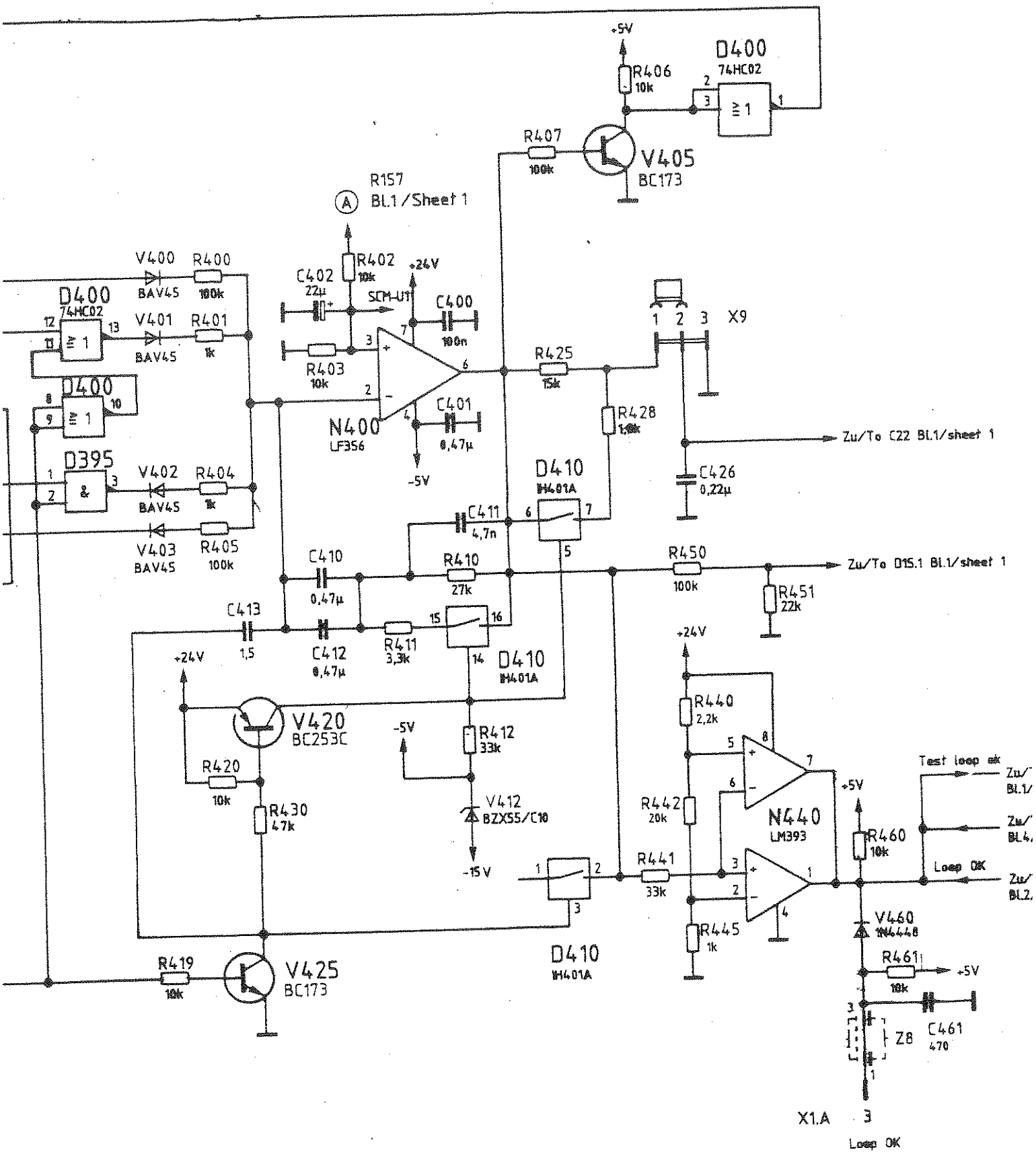

Stromlauf zu	HF-Oszillator / RF oscillator	Z	Zeichn.-Nr. 802. 8835 S
	reg. i. V. 802.2020 V	erste Z.	

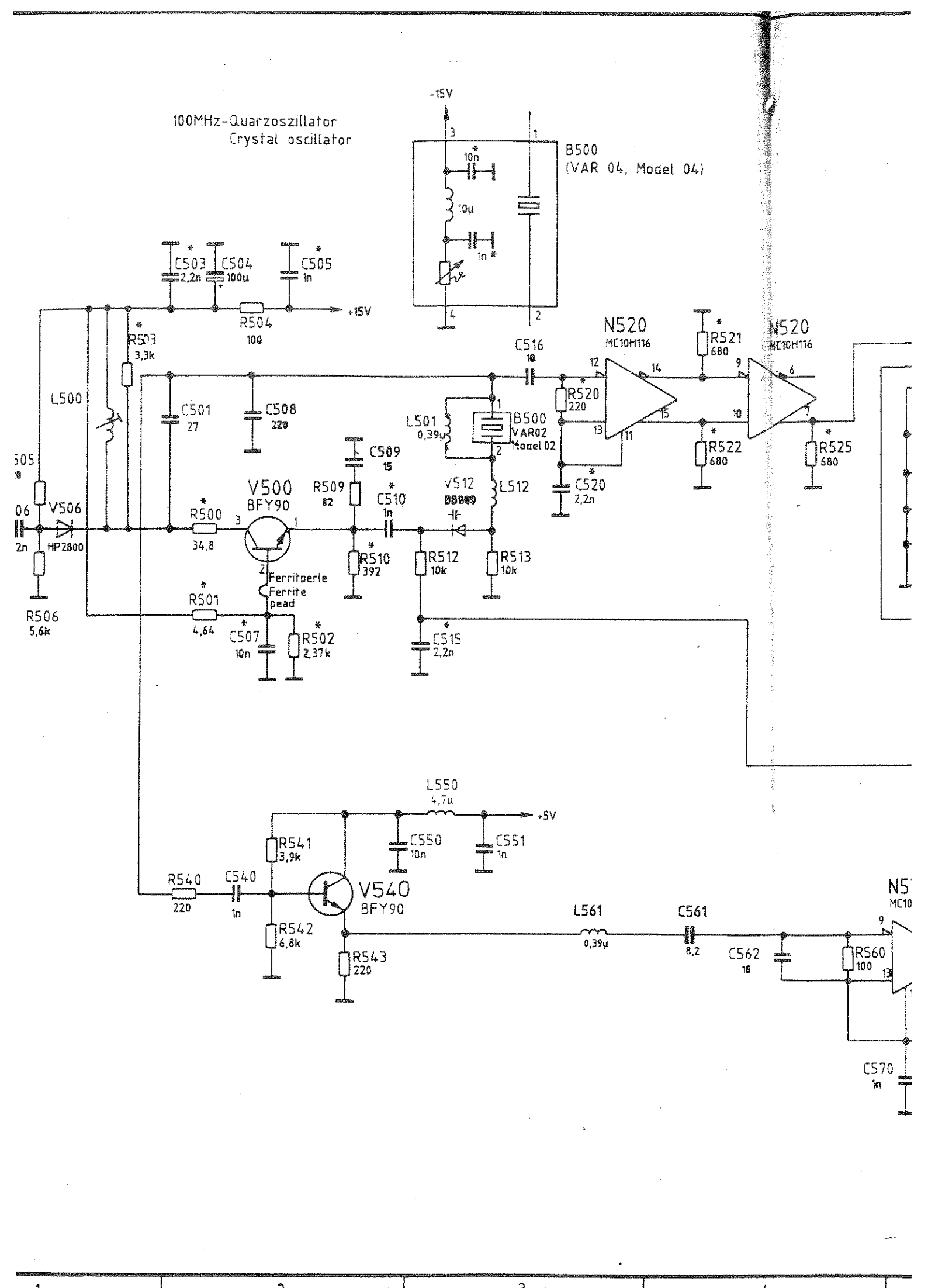
100MHz-Quarzoszillator
Crystal oscillator
-15V
B500
(VAR 04, Model 04)
10n
10µ
1n
C503
2,2n
C504
100µ
C505
1n
R504
100
+15V
R503
3,3k
L500
C501
27
C508
220
C516
10
N520
MC10H116
R521
680
R520
220
L501
0,39µ
B500
VAR02
Model 02
C509
15
V500
BFY90
R509
82
C510
1n
V512
BB809
L512
C520
2,2n
R522
680
R525
680
V506
HP2800
R500
34,8
R510
392
R512
10k
R513
10k
Ferritperle
Ferrite
pead
R506
5,6k
R501
4,64
C507
10n
R502
2,37k
C515
2,2n
L550
4,7µ
+5V
R541
3,9k
C550
10n
C551
1n
R540
220
C540
1n
V540
BFY90
R542
6,8k
R543
220
L561
0,39µ
C561
8,2
C562
10
R560
100
C570
1n

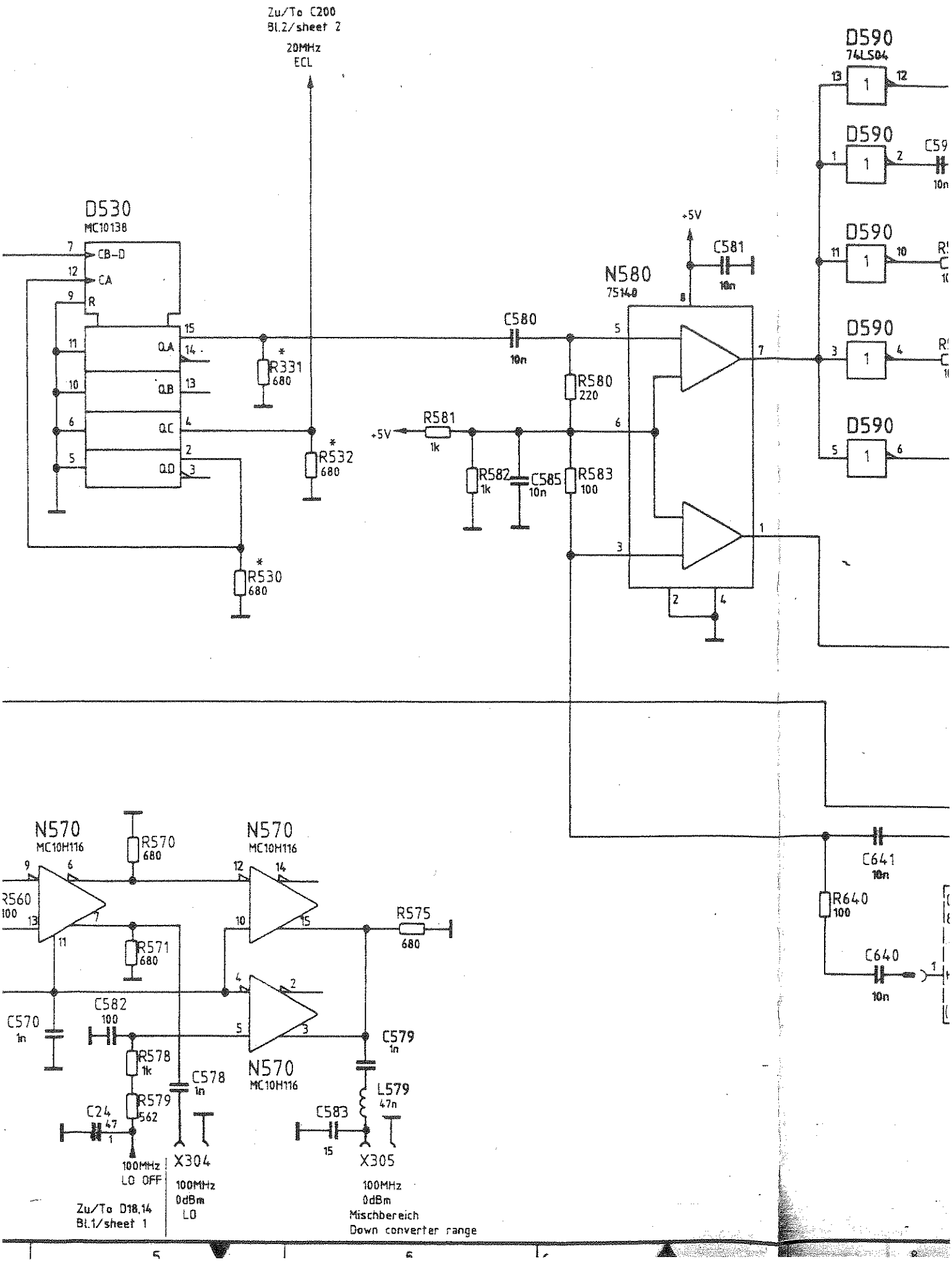
Zu/To C200
Bl.2/sheet 2
20MHz
ECL
D530
MC10138
CB-D
CA
R
Q.A
Q.B
Q.C
Q.D
R331
680
R532
680
R530
680
C580
10n
R580
220
R581
1k
+5V
R582
1k
C585
10n
R583
100
N580
75140
C581
10n
D590
74LS04
C59
10n
C641
10n
R640
100
C640
10n
N570
MC10H116
R560
100
R570
680
R571
680
R575
680
C570
1n
C582
100
R578
1k
R579
562
C578
1n
C24
47
C579
1n
L579
47n
C583
15
X304
X305
100MHz
LO OFF
100MHz
0dBm
LO
100MHz
0dBm
Mischbereich
Down converter range
Zu/To D18,14
Bl.1/sheet 1

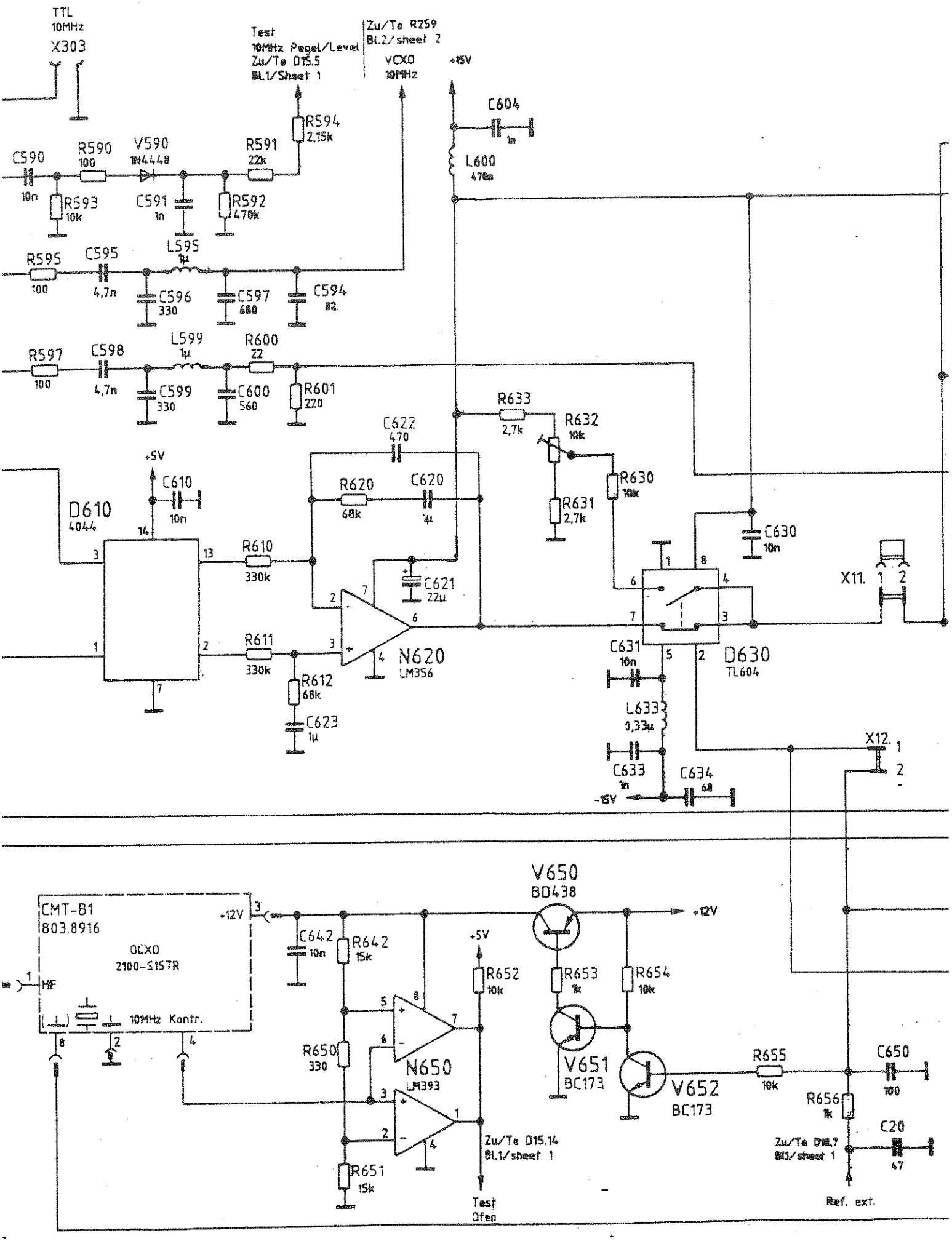

Klebekante für Druckerzeugnis ; durch diese Zone möglichst nur Leitungen führen.

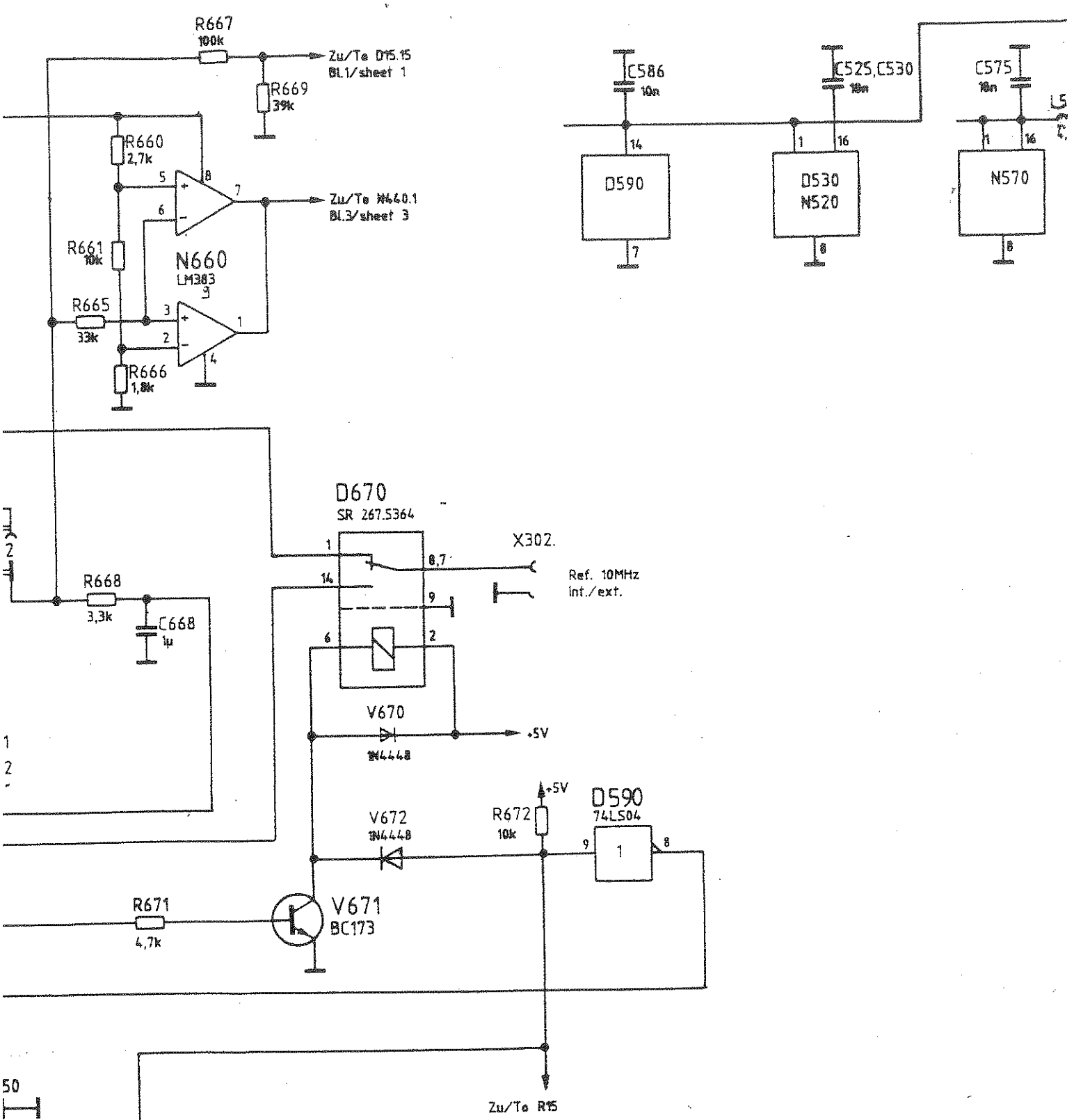

Stromlauf zu

HF-Oszillator/RF oscillator

Z

Zeichn.-Nr.

802. 8835 S

reg. i. V. 802.2020 V

erste Z.

12 13 14 15

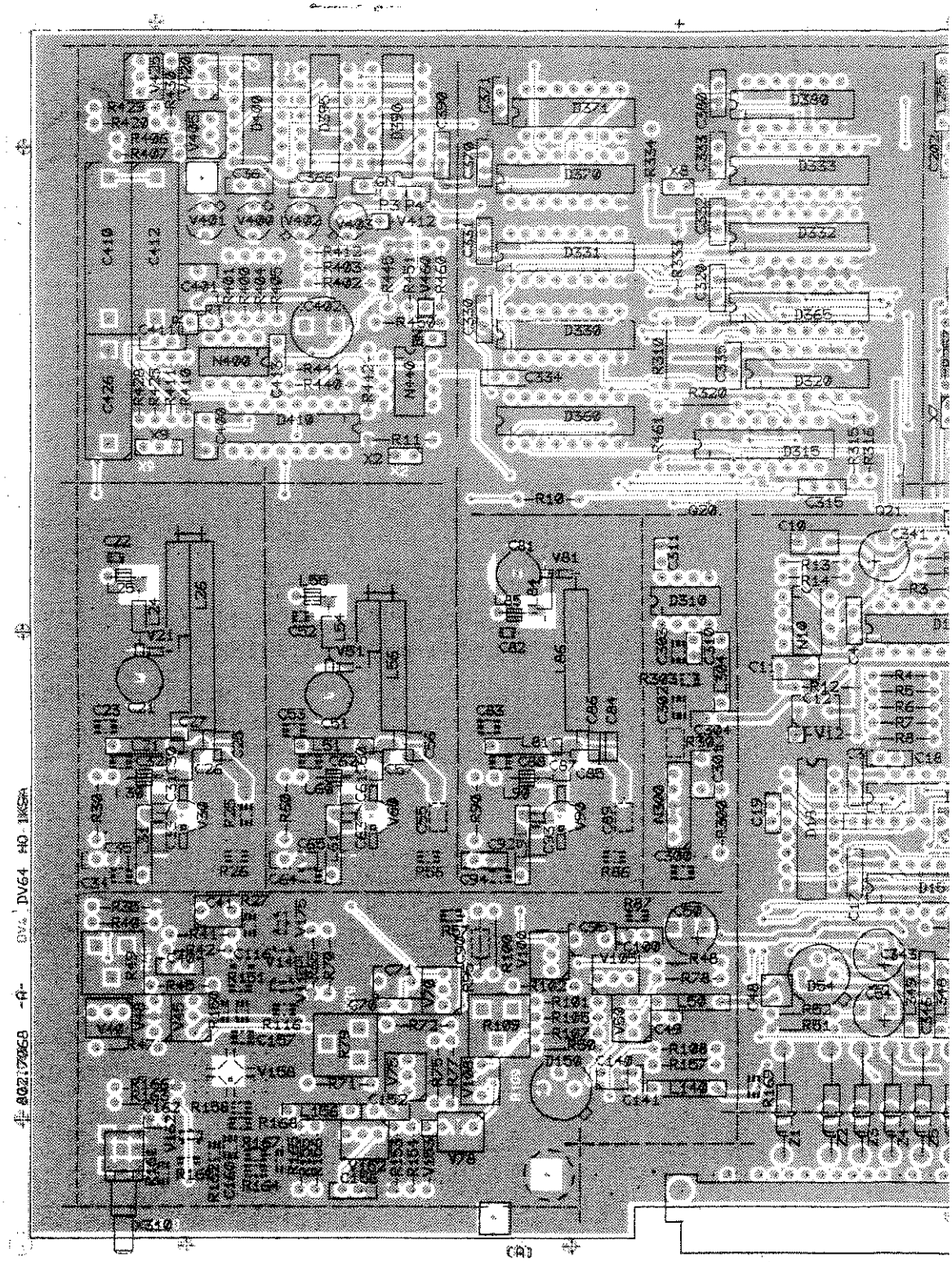

Ansicht und Leitungsführung Bauteilseite
View of tracks on component side

(hierzu HVC 250)

ACHTUNG: EGB!
Elektrostatisch gefährdete Bauelemente erfordern eine besondere Handhabung.

ATTENTION ESD!
Electrostatic sensitive devices require a special handling.

VARIANTENERKLÄRUNG/VERSION
VAR 02 – GRUNDAUSFÜHRUNG/BASIC MOD

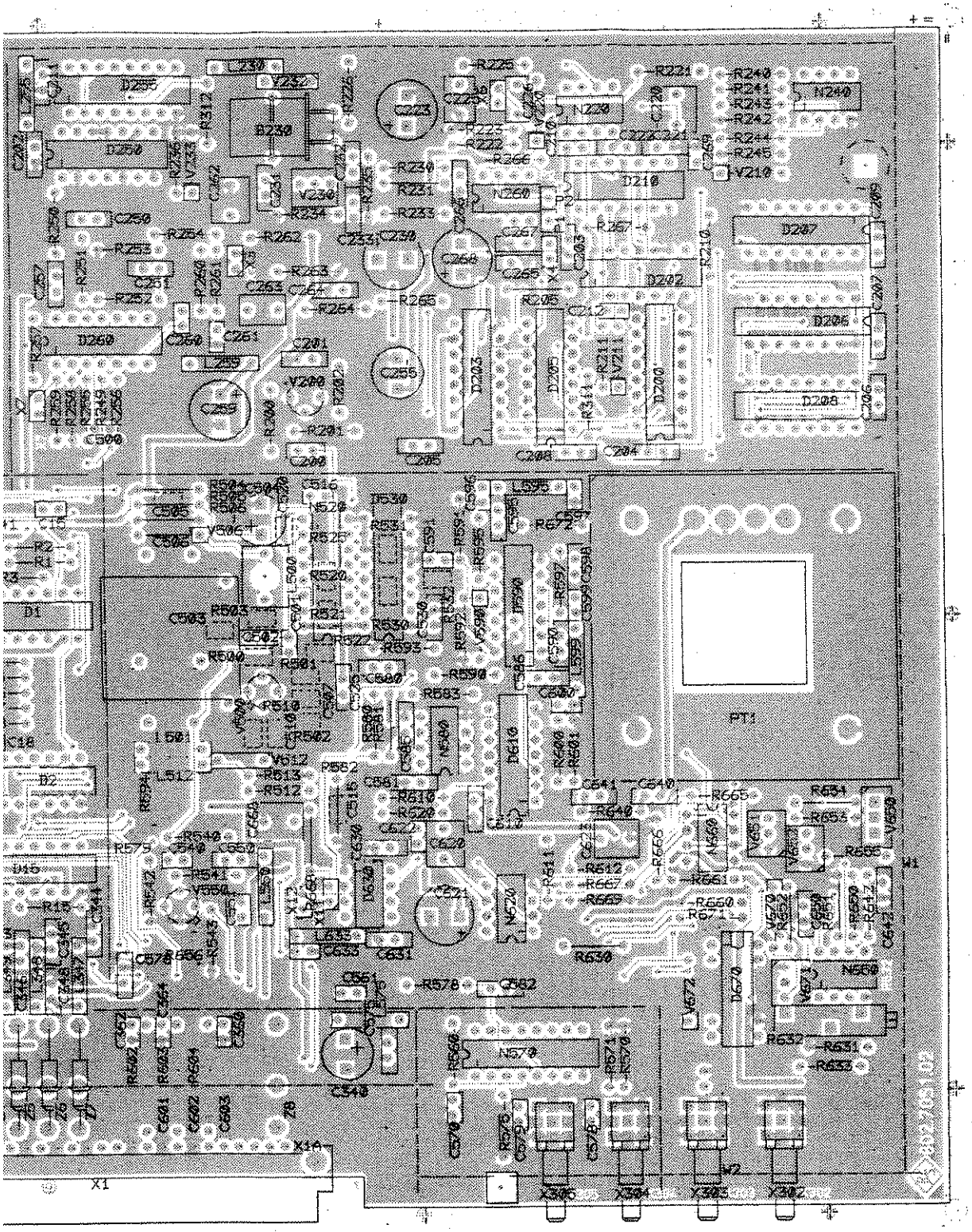

				Maße ohne Toleranzangabe		Maßstab 1 : 1	
						Halbzeug, Werkstoff	
				1KSA	Tag	Name	Benennung
				Bearb.	10.87	LS	HF-OSZILLATOR RF-OSCILLATOR
				Gepr.			Z
				Norm			
MODEL				ROHDE&SCHWARZ		Zeichn.-Nr. 802.8835.01 EE	Blatt-Nr. 3 v. Bl.
	Änd. Zust.	Änderungs-Mitteilung	Tag	Name	zu Gerät CMT	reg. i. V. 802.2020 V	erste Z.

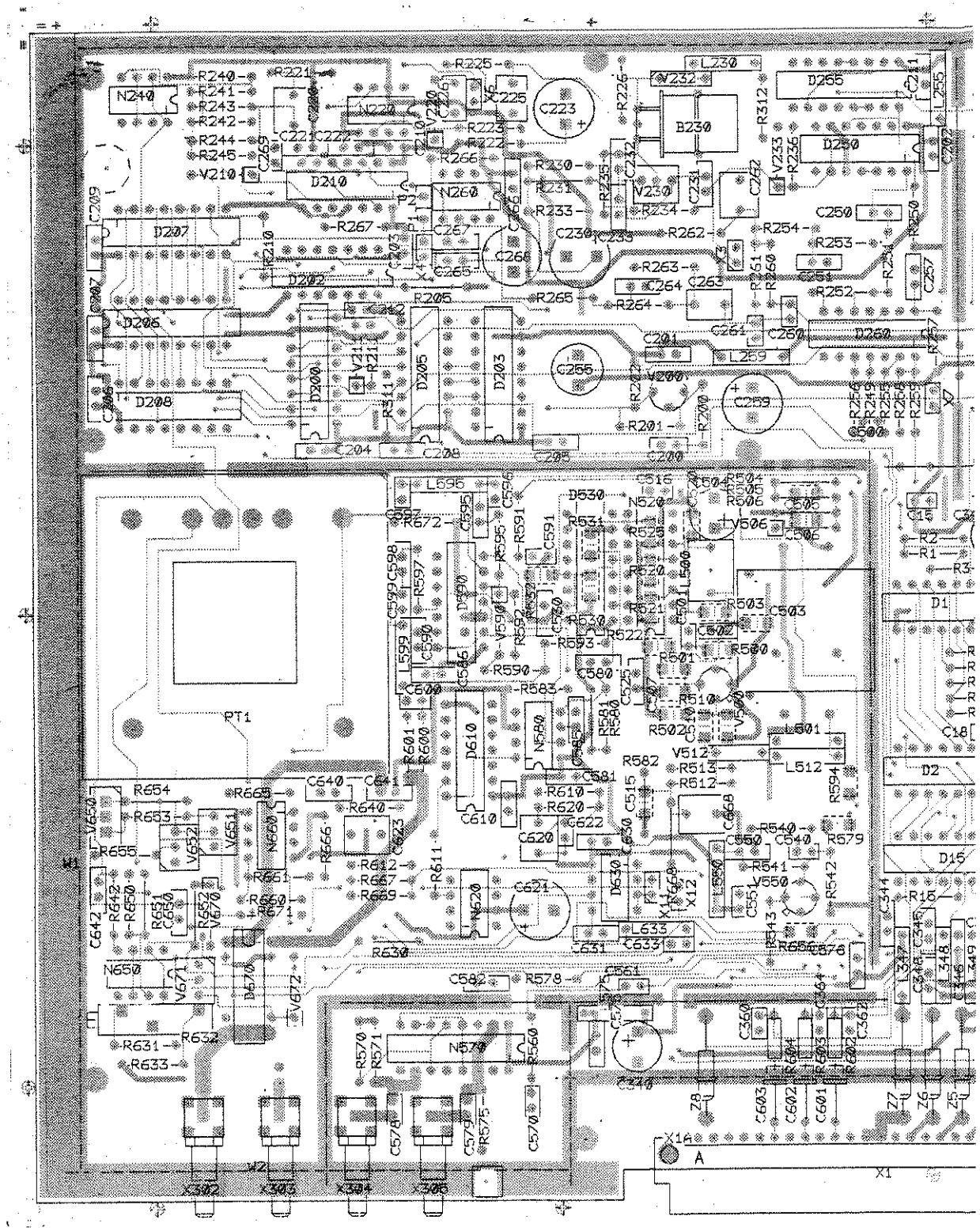

Ansicht und Leitungsführung Lötseite
View of tracks on solder side

(hierzu HVC 250)

ACHTUNG: EGB!
Elektrostatisch gefährdete Bauelemente erfordern eine besondere Handhabung.

ATTENTION ESD!
Electrostatic sensitive devices require a special handling.

VARIANTENERKLÄRUNG / VERSION
VAR 02 – GRUNDAUSFÜHRUNG / BASIC MODEL

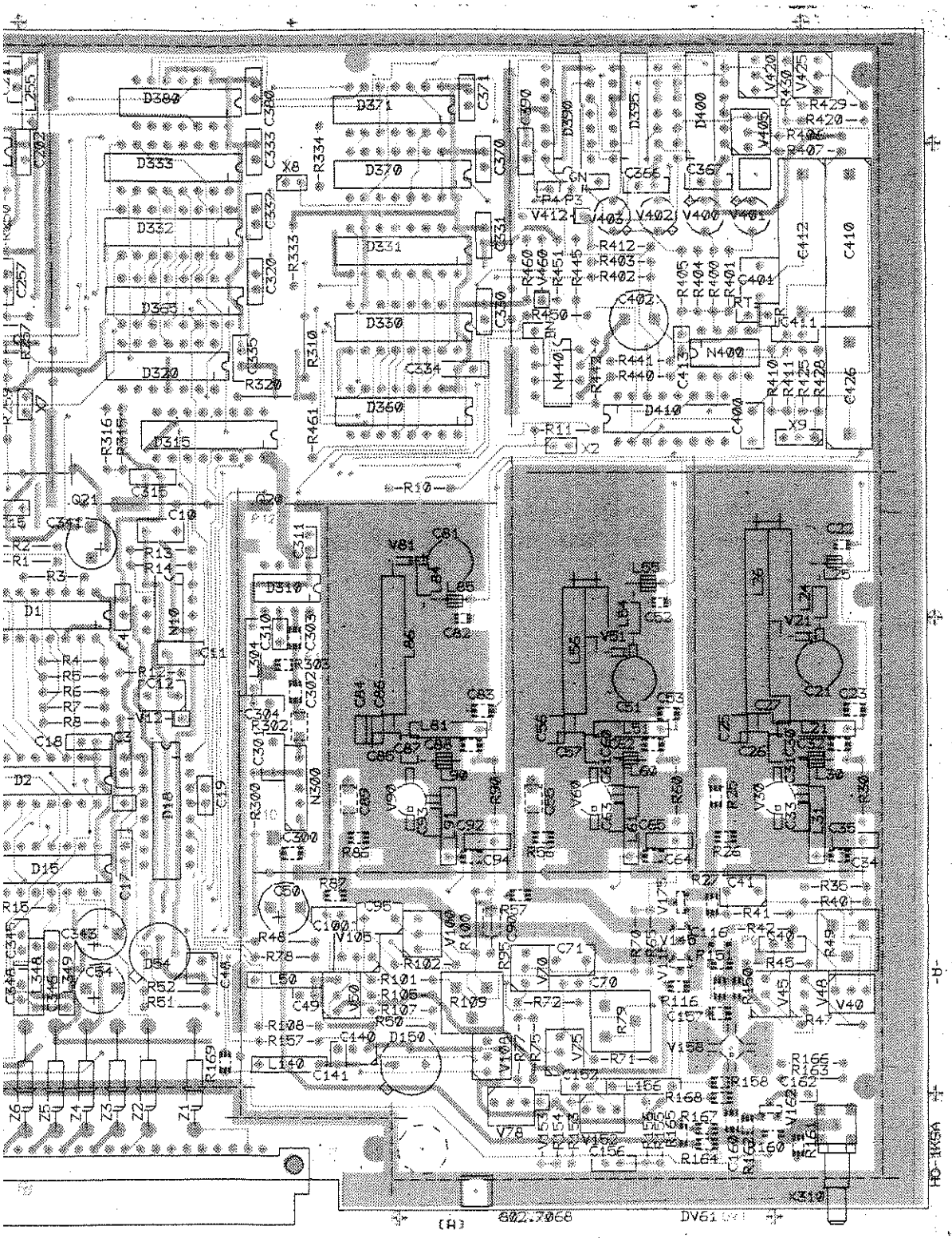

				Maße ohne Toleranzangabe		Maßstab 1 : 1	
						Halbzeug, Werkstoff	
				1KSA	Tag	Name	Benennung
				Bearb.	10.87	LS	HF - OSZILLATOR RF - OSCILLATOR
				Gepr.			Z
				Norm			
DEL				ROHDE&SCHWARZ		Zeichn.-Nr. 802.8835.01	EE
	Änd. Zust.	Änderungs-Mitteilung	Tag	Name	zu Gerät CMT	reg. i. V. 802.2020 V	erste Z.

Blatt-Nr. 4 v. Bl.

5 6 7 8

07 6001 81

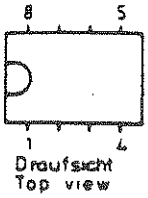

D310,D630,N10
N220,N240,N260
N400,N440,N580
N620,N650,N660

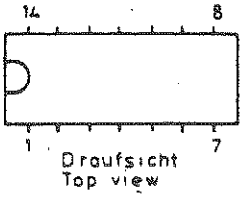

D202,D210,D250,D260
D320,D371,D380,D390
D395,D400,D590,D610

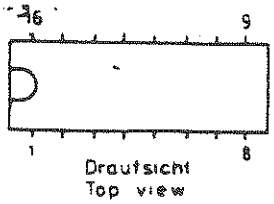

D1,D15,D18,D2,D200,D203
D205,D206,D207,D208,D255
D315,D330,D331,D332,D333
D360,D365,D370,D410,D530
N570,N520

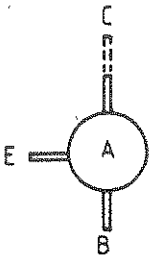

V30,V60,V90

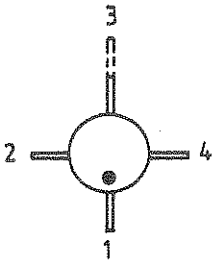

V158

N300

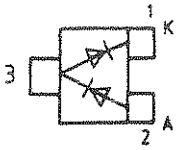

V115
V145
V175

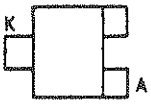

V162

V100,V105,V108
V152,V230,V40
V420,V425,V45
V48,V671,V70,
V75,V78

D50

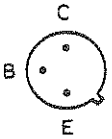

V651,V652

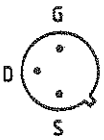

V500

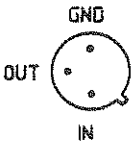

D150

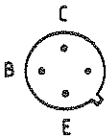

V550

Für diese U... ...age behalten
wir uns alle Rechte vor

				1KSA	Tag	Name	Benennung
				Bearb.	09.87	LS	HF-Oszillator / RF oscillator
				Gepr			
				Norm			
				ROHDE & SCHWARZ			Zeichn.-Nr 802. 8835 S
And Zust	Änderungs-Mitteilung	Tag	Name	zu Gerät			reg. v 802.2020 V erste Z

Z

Blatt Nr 5 v 5 Bl

ROHDE&SCHWARZ

SERVICE INSTRUCTIONS

Attenuation Set Module

802.4223.02

Contents

Page

5 Service Manual for Attenuation Set Module 5.1

5.1 Function Description 5.1

5.2 Testing and Adjustment 5.3

5.3 Interfaces 5.3

Component lists
Circuit diagrams
Component layout diagrams

5 Service Manual for Attenuation Set

(See circuit diagram 802.4223 S and block diagram)

Caution: The module must not be opened. The guarantee is otherwise void and the instrument must be recalibrated.

5.1 Function Description

The switches on the attenuator pads are driven by D1, a shift register (serial in/parallel out), via the power drivers D10, D11, D12, D13. The power attenuator pad (L) is driven via D3 and V8 because it is necessary to switch the pad from the RF overvoltage protection (limiter diodes Z9) in addition to via the controller interface. The signal path in this case is: Z9 → Z11/Z12 → comparators N1 → D3 (pin 6) → V8 → power attenuator pad. Once the limiter diodes have responded, the circuit V50 and V60 effects the diodes so, that they are fully driven in the forward direction for approx. 10 ms thus the RF power, which may be up to 50 W, is short-circuited until the power attenuator pad Z10 is switched on. If the function of the limiter diodes is no longer required, they can be switched in the reverse direction using V9, V10 and V11 so that they do not produce intermodulation. The components V15/R2 and V1/R27 determine the operating point of the limiter diodes.

The attenuation set is connected between the output stage of the RF synthesizer and the input/output of the instrument. The function of the attenuation set during the receiver test is to attenuate the level of the RF synthesizer. Two 40-dB attenuator pads, two 20-dB attenuator pads (one as part of the 12-dB power divider), one 10-dB attenuator pad and one 5-dB attenuator pad are used to this end. The smallest possible resolution is therefore 5 dB. The intermediate values are produced electronically by the output stage (802.7616.02).

A differentiation is made between two cases in the transmitter test: on the one hand, the signal passes directly via the power divider. If the power divider is bypassed, the signal on the RF overvoltage protection switches the divider on. The power is divided amongst 3 paths in this second case: to the rear (RF -30 dB) for further external processing, to the power meter and to the demodulators.

The signal of the power test point of Z10 is applied via Z13 and Z14 to the subtracting amplifier N5 whose output X41.16 is connected to the A/D converter. Once this analog signal has been digitized using the comparator, a power above a threshold of approx. 1 W indicates to the controller via D3 using an interrupt that a power is present. The power measuring diodes can also be biased in the reverse direction via N5 (pins 1, 2, 3) in order to prevent intermodulation whilst relinquishing the power measuring function.

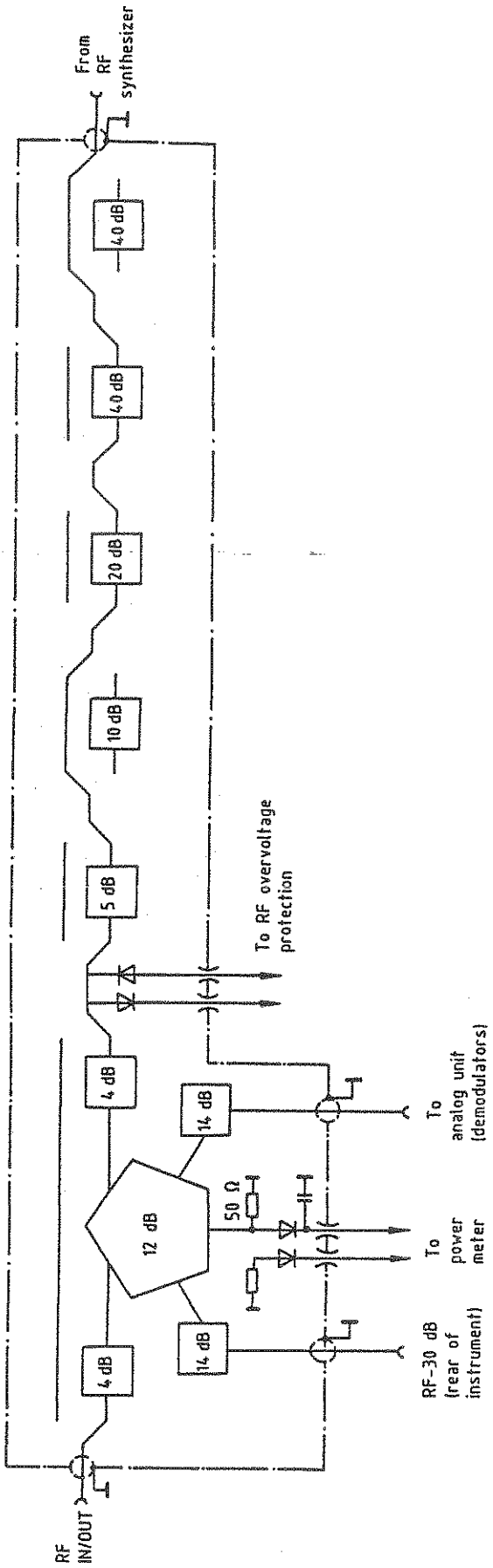

Fig. 5-1 Block diagram of the RF attenuation set

5.2 Testing and Adjustment

Potentiometer R34 is used to adjust the response threshold of the RF overvoltage protection. The adjustment is carried out in the complete instrument (see Section 4).

5.3 Interfaces

Connector	Input Output	Designation	Value
W1	I/O	RF IN/OUT	I: 5 mW to 50 W O: 1 V
W2	I	RF IN	1 V
Z13 Z14	O O	Input voltage Reference voltage	$V_{PK\ RF}$ - 16 dB -0.25 V ±0.1 V
Z11 Z12	I/O I/O	Positive overvoltage protect. negative	+3 V -3 V *)
X41.16 X41.13	O O	Power: DC Power: Trigger	$V_{PK\ RF}$ - 16 dB TTL **)
X41.11 X41.12 X41.15	I I I	Data Clock Strobe	CMOS 5 V CMOS 5 V CMOS 5 V
X41.3 X41.14	O O	Interrupt: Power Interrupt: Thermo	CMOS 5 V CMOS 5 V
X41.8 X41.7 X41.10 X41.5	I I I I	+24 V +15 V -15 V + 5 V	<10 mA <40 mA <10 mA <10 mA

*) Dependent on R34 in unloaded status
**) Threshold with V_{RF} = approx. 1 V

ROHDE & SCHWARZ
MÜNCHEN

Schaltteillisten
Stromläufe
Bestückungspläne

Parts lists
Circuit diagrams
Components plans

R 29500 Bl. 2

ROHDE&SCHWARZ	AZ 09	Datum Date 0987	Schaltteiliste für Parts list for ZE EICHLEITUNG FUER CMT	Sachnummer Stock Nr. 802.4223.01 SA	Blatt Page 1

Kennzeichen Component No.	Benennung/Beschreibung Designation	Sachnummer Stock No.	enthalten in contained in
A170	ED ANSTEUERUNG EICHLEIT. NUR VAR : 04	802.4298.04	
C1	CK 100NF+-5%63V5RM MKT CAPACITOR WIMA MKS/2/63/0,1UF/5%	CK 099.2930	802.4298.01
C2	CK 100NF+-5%63V5RM MKT CAPACITOR WIMA MKS/2/63/0,1UF/5%	CK 099.2930	802.4298.01
C3	CE 220UF+-20%25V RD8X14 ELECTROLYTIC CAPACITOR NIPPON SXE 25 VB 220 8X14	803.1063	802.4298.01
BIS/TO C7			
C8	CE 100UF+-20%25V RD8X9,5 ELECTROLYTIC CAPACITOR MATSUSHITA ECE-A1ESS-101	803.0580	802.4298.01
C9	CE 100UF+-20%25V RD8X9,5 ELECTROLYTIC CAPACITOR MATSUSHITA ECE-A1ESS-101	803.0580	802.4298.01
C10	CE 470UF+-20%25V12,5X12,5 ELECTROLYTIC CAPACITOR MATSUSHITA ECE-A1ESS-471U	803.0715	802.4298.01
C11	CE 470UF+-20%25V12,5X12,5 ELECTROLYTIC CAPACITOR MATSUSHITA ECE-A1ESS-471U	803.0715	802.4298.01
C12	TRIMMWERT / SELECTED		802.4298.01
C30	CE 22UF-10+50% 63V 9X13 ELECTROLYTIC CAPACITOR ROEDERST EK 00 CB 222 J	CE 006.7120	802.4298.01
C31	CE 47UF-10+50% 40V 9X13 ELECTROLYTIC CAPACITOR ROEDERST EK 00 CB 247 G	CE 006.7142	802.4298.01
C32	CE 100UF+-20%25V RD8X9,5 ELECTROLYTIC CAPACITOR MATSUSHITA ECE-A1ESS-101	803.0580	802.4298.01
C33	CE 47UF-10+50% 40V 9X13 ELECTROLYTIC CAPACITOR ROEDERST EK 00 CB 247 G	CE 006.7142	802.4298.01
C50	CK 680NF+-10%50VRM MKT CAPACITOR WIMA MKS2/50/0,68UF/10%	CK 099.2981	802.4298.01
C60	CK 680NF+-10%50VRM MKT CAPACITOR WIMA MKS2/50/0,68UF/10%	CK 099.2981	802.4298.01
D1	BL CD4094BF 8BIT SH.REG SHIFT REGISTER RCA CD4094BF	BL 418.0064	802.4298.01
D3	BL CD4013BE 2XD- FLIPFL FLIPFLOP RCA CD4013BE	BL 086.7021	802.4298.01
D10	BJ SN75361AP 2XTTL/MOS-LC LEVEL CONVERTER NSC DS75361N	BJ 294.8490	802.4298.01

uns alle Rechte vor

Kennzeichen Component No.	Benennung/Beschreibung Designation	Sachnummer Stock No.	enthalten in contained in
BIS/TO D13			
K1	ZM ELEKTROMAGNET ELECTROMAGNET	294.8425	294.8760
BIS/TO K5			
K7	ZM ELEKTROMAGNET ELECTROMAGNET	294.8425	294.8760
K9	ZM ELEKTROMAGNET ELECTROMAGNET	294.8425	294.8760
N1	BO LF412CN 2XFET OPAMP OPERATIONAL AMPLIFIER NSC LF412CN	356.0521	802.4298.01
N3	BO LF412CN 2XFET OPAMP OPERATIONAL AMPLIFIER NSC LF412CN	356.0521	802.4298.01
N5	BO TL074IN 4XFET OPAMP OPERATIONAL AMPLIFIER TEXAS INST TL074IN	568.7528	802.4298.01
R1	RL 0,35W 4,75KOHM+-1%TK50 RESISTOR DRALORIC SMA0207/4,75K-F-D	RL 083.1097	802.4298.01
R2	RN 5X4,7KOHM+-2% SIL10 H5 RESISTOR NETWORK BOURNS 4310R-102-472	RN 647.5779	802.4298.01
R3	RL 0,35W 10,0 OHM+-1%TK50 RESISTOR DRALORIC SMA0207/10OHM-F-D	RL 082.8852	802.4298.01
R4	RL 0-WIDERSTAND DIN 0204 0-OHM RESISTOR DRALORIC OMA 0204	RL 069.0000	802.4298.01
R6	RL 0,35W 18,2KOHM+-1%TK50 RESISTOR DRALORIC SMA/207/18,2K-F-C	RL 083.1480	802.4298.01
R7	RL 0,35W 100KOHM+-1%TK50 RESISTOR DRALORIC SMA0207/100K-F-C	RL 082.1764	802.4298.01
R8	RL 0,35W 11,5KOHM+-1%TK50 RESISTOR DRALORIC SMA0207/11,5K-F-D	RL 083.1339	802.4298.01
R9	RL 0,35W 47,5KOHM+-1%TK50 RESISTOR DRALORIC SMA/207/47,5K-F-C	RL 083.1800	802.4298.01
R10	RL 0,35W 5,11KOHM+-1%TK50 RESISTOR DRALORIC SMA0207/5,11K-F-C	RL 082.2348	802.4298.01
R14	RN 5X 39KOHM+-2%SIL10 H5 RESISTOR NETWORK BOURNS 4310R-102-393	RN 569.3184	802.4298.01
R15	RL 0,35W 1,50KOHM+-1%TK50 RESISTOR DRALORIC SMA0207/1,50K-F-D	RL 083.0732	802.4298.01

ROHDE&SCHWARZ	ÄZ 09	Datum Date 0987	Schaltteilliste für Parts list for ZE EICHLEITUNG FUER CMT	Sachnummer Stock Nr. 802.4223.01 SA	Blatt Page 3

Kennzeichen Component No.	Benennung/Beschreibung Designation	Sachnummer Stock No.	enthalten in contained in
R16	RL 0,35W 221 KOHM+-1%TK50 RESISTOR DRALORIC SMA0207/221K-F-C	RL 083.2270	802.4298.01
R17	RL 0,35W 221 KOHM+-1%TK50 RESISTOR DRALORIC SMA0207/221K-F-C	RL 083.2270	802.4298.01
R18	RL 0,35W 4,75KOHM+-1%TK50 RESISTOR DRALORIC SMA0207/4,75K-F-D	RL 083.1097	802.4298.01
R19	RL 0,35W 4,75KOHM+-1%TK50 RESISTOR DRALORIC SMA0207/4,75K-F-D	RL 083.1097	802.4298.01
R20	RL 0,35W 14,7KOHM+-1%TK50 RESISTOR DRALORIC SMA0207/14,7K-F-D	RL 083.1397	802.4298.01
R21	RL 0,35W 301 OHM+-1%TK50 RESISTOR DRALORIC SMA0207/301OHM-F-D	RL 083.0210	802.4298.01
R22	RL 0,35W 1KOHM+-1%TK50 RESISTOR DRALORIC SMA0207/1K-F-C	RL 082.2160	802.4298.01
R23	RS 0,5W1KOHM+-10%10X10X5 CERMET POTENTIOMETER BOURNS 3386X-1-102	RS 247.5917	802.4298.01
R25	RL 0,35W 12,1KOHM+-1%TK50 RESISTOR DRALORIC SMA0207/12,1K-F-D	RL 083.1351	802.4298.01
R26	RL 0,35W 3,01KOHM+-1%TK50 RESISTOR DRALORIC SMA0207/3,01K-F-D	RL 083.0961	802.4298.01
R27	RL 0-WIDERSTAND DIN 0204 0-OHM RESISTOR DRALORIC OMA 0204	RL 069.0000	802.4298.01
R29	RL 0,35W 100KOHM+-1%TK50 RESISTOR DRALORIC SMA0207/100K-F-C	RL 082.1764	802.4298.01
R30	RL 0,35W 10,0 OHM+-1%TK50 RESISTOR DRALORIC SMA0207/10OHM-F-D	RL 082.8852	802.4298.01
R31	RL 0,35W4,75 OHM+-1%TK50 METALFILMRESISTOR RESISTA MK2 4,75 OHM 1% TK50	RL 099.8021	802.4298.01
R32	RL 0,35W 10,0 OHM+-1%TK50 RESISTOR DRALORIC SMA0207/10OHM-F-D	RL 082.8852	802.4298.01
R33	RL 0,35W 10,0 OHM+-1%TK50 RESISTOR DRALORIC SMA0207/10OHM-F-D	RL 082.8852	802.4298.01
R34	RS 0,5W5KOHM+-10%10X10X5 CERMET POTENTIOMETER BOURNS 3386X-1-502	RS 247.7978	802.4298.01
R35	RL 0,35W 18,2KOHM+-1%TK50 RESISTOR DRALORIC SMA/207/18,2K-F-C	RL 083.1480	802.4298.01
R37	RL 0,35W 11,5KOHM+-1%TK50 RESISTOR DRALORIC SMA0207/11,5K-F-D	RL 083.1339	802.4298.01

uns alle Rechte vor

ROHDE&SCHWARZ	ÄZ	Datum Date	Schaltteilliste für Parts list for	Sachnummer Stock Nr.	Blatt Page
	09	0987	ZE EICHLEITUNG FUER CMT	802.4223.01 SA	4

Kennzeichen Component No.	Benennung/Beschreibung Designation	Sachnummer Stock No.	enthalten in contained in
R38	RL 0,35W 10,0KOHM+-1%TK50 RESISTOR DRALORIC SMA0207/10K-F-D	RL 083.1297	802.4298.01
R39	RL 0,35W 5,62KOHM+-1%TK50 RESISTOR DRALORIC SMA0207/5,62K-F-C	RL 082.2190	802.4298.01
R40	RL 0,35W 2,00KOHM+-1%TK50 RESISTOR DRALORIC SMA0207/2,00K-F-D	RL 083.0826	802.4298.01
R41	RL 0,35W 1KOHM+-1%TK50 RESISTOR DRALORIC SMA0207/1K-F-C	RL 082.2160	802.4298.01
R42	RL 0,35W 226 OHM+-1%TK50 RESISTOR DRALORIC SMA0207/226OHM-F-D	RL 083.0090	802.4298.01
R43	RL 0,35W 10,0KOHM+-1%TK50 RESISTOR DRALORIC SMA0207/10K-F-D	RL 083.1297	802.4298.01
R44	RL 0,35W 10,0KOHM+-1%TK50 RESISTOR DRALORIC SMA0207/10K-F-D	RL 083.1297	802.4298.01
R50	RL 0,35W 475 OHM+-1%TK50 RESISTOR DRALORIC SMA0207/475OHM-F-D	RL 083.0390	802.4298.01
R51	RL 0,35W 20,0KOHM+-1%TK50 RESISTOR DRALORIC SMA/207/20K-F-C	RL 083.1522	802.4298.01
R52	RL 0,35W 82,5KOHM+-1%TK50 RESISTOR DRALORIC SMA0207/82,5K-F-C	RL 082.2302	802.4298.01
R60	RL 0,35W 475 OHM+-1%TK50 RESISTOR DRALORIC SMA0207/475OHM-F-D	RL 083.0390	802.4298.01
R61	RL 0,35W 20,0KOHM+-1%TK50 RESISTOR DRALORIC SMA/207/20K-F-C	RL 083.1522	802.4298.01
R62	RL 0,35W 82,5KOHM+-1%TK50 RESISTOR DRALORIC SMA0207/82,5K-F-C	RL 082.2302	802.4298.01
S1	ST OEFFNER 71GRD C+-6%SH THERMO SWITCH MICROTHERM R&S-ZCHNG.294.8790	294.8790	
V1	AE BZX85/C5V6 1,3W Z-DI ZENER DIODE THOMSON BZX85/C5V6	AE 092.8232	802.4298.01
V2	AE BZX79/C8V2 0,5W Z-DI ZENER DIODE VALVO BZX79/C8V2	AE 012.2490	802.4298.01
V3	AD 1N4448 75V 0,15A UDI DIODE TEXAS INST 1N4448 GEGURTET	AD 012.0700	802.4298.01
BIS/TO V6			

ROHDE&SCHWARZ	ÄZ	Datum Date	Schaltteilliste für Parts list for	Sachnummer Stock Nr.	Blatt Page
	09	0987	ZE EICHLEITUNG FUER CMT	802.4223.01 SA	5

Kennzeichen Component No.	Benennung/Beschreibung Designation	Sachnummer Stock No.	enthalten in contained in
V7	AE BZX79/C15 0,5W Z-DI ZENER DIODE VALVO BZX79/C15	AE 012.2555	802.4298.01
V8	AK BC173C NPN 25V 100MA TRANSISTOR INTERMETAL BC173C	010.4444	802.4298.01
V9	AK BC173C NPN 25V 100MA TRANSISTOR INTERMETAL BC173C	010.4444	802.4298.01
V10	AK BC253C PNP 25V 100MA TRANSISTOR INTERMETAL BC253C	010.2829	802.4298.01
V11	AK BC253C PNP 25V 100MA TRANSISTOR INTERMETAL BC253C	010.2829	802.4298.01
V12	AD 1N4448 75V 0,15A UDI DIODE TEXAS INST 1N4448 GEGURTET	AD 012.0700	802.4298.01
V13	AD 1N4448 75V 0,15A UDI DIODE TEXAS INST 1N4448 GEGURTET	AD 012.0700	802.4298.01
V14	AE BZX79/C5V6 0,5W Z-DI ZENER DIODE VALVO BZX79/C5V6	AE 012.2455	802.4298.01
V15	AE BZX85/C5V6 1,3W Z-DI ZENER DIODE THOMSON BZX85/C5V6	AE 092.8232	802.4298.01
V16	AE BZX79/C8V2 0,5W Z-DI ZENER DIODE VALVO BZX79/C8V2	AE 012.2490	802.4298.01
V17	AD 1N4448 75V 0,15A UDI DIODE TEXAS INST 1N4448 GEGURTET	AD 012.0700	802.4298.01
V18	AD 1N4448 75V 0,15A UDI DIODE TEXAS INST 1N4448 GEGURTET	AD 012.0700	802.4298.01
V20	TRIMMWERT / SELECTED		802.4298.01
V50	AK BC173C NPN 25V 100MA TRANSISTOR INTERMETAL BC173C	010.4444	802.4298.01
V52	AD 1N4448 75V 0,15A UDI DIODE TEXAS INST 1N4448 GEGURTET	AD 012.0700	802.4298.01
V60	AK BC253C PNP 25V 100MA TRANSISTOR INTERMETAL BC253C	010.2829	802.4298.01
V62	AD 1N4448 75V 0,15A UDI DIODE TEXAS INST 1N4448 GEGURTET	AD 012.0700	802.4298.01
W27	DX KABEL W27 CABLE W27	803.0273	
X41	FR IC-FASSUNG 16 POLIG 16-PIN IC-SOCKET PRECICONT USO16T	FR 249.6091	802.4298.01

uns alle Rechte vor

Kennzeichen Component No.	Benennung/Beschreibung Designation	Sachnummer Stock No.	enthalten in contained in
X42	FP INDIREKT.STECKERL.36P. PIN CONNECTOR BERG 75160-102-36	FP 242.3600	802.4298.01
X113	FP STECKERL.ABGEW.36-POL. ANGLE PIN CONNECTOR BERG 75168-114-36	FP 087.9105	802.4298.01
Z1	DT DAEMPFUNGSGLIED40DB/50 ATTENUATOR 40DB/50	912.5269	800.9205
Z2	DT DAEMPFUNGSGLIED20DB/50 ATTENUATOR 20DB/50	912.5252	800.9205
Z3	BD DAEMPFUNGSGLIED 5DB/50 ATTENUATION 5DB/50	912.5281	800.9205
Z4	DT DAEMPFUNGSGLIED10DB/50 ATTENUATOR 10DB/50	912.5246	800.9205
Z5	DT DAEMPFUNGSGLIED40DB/50 ATTENUATOR 40DB/50	912.5269	800.9205
Z6	DT DAEMPFUNGSGLIED 4DB/50 ATTENUATOR 4DB/50	912.5230	800.9205
Z7	DT 2X14DB DAEMPFUNGSGLD.	915.0400	800.9205
Z8	DT VERBINDUNGSLEITUNG	912.5298	800.9205
Z9	BD UEBERSPANNUNGSSCHUTZ	800.9570	800.9205
Z10	BD LEISTUNGSVERTEILUNG	915.0300	800.9205

- ENDE -

Ansicht und Leitungsfüh
View of tracks on compo

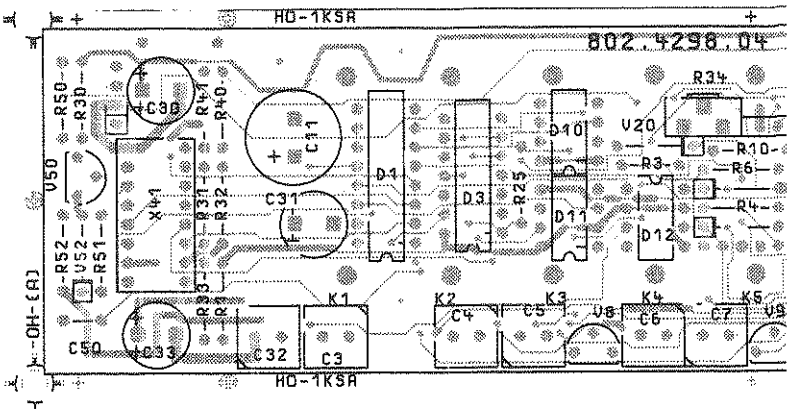

Ansicht und Leitungsfüh
View of tracks on solder

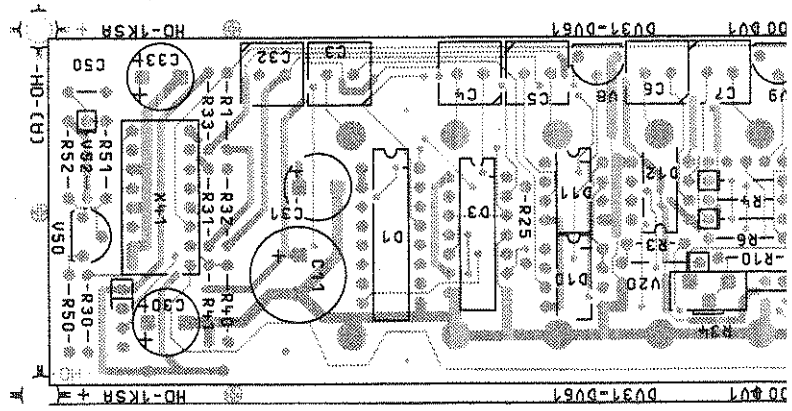

Ihierzu HVC 2501

ACHTUNG: EGB!
Elektrostatisch gefährdete Bauelemente erfordern eine besondere Handhabung.

ATTENTION ESD!
Electrostatic sensitive devices require a special handling.

gsführung Bauteilseite
omponent side

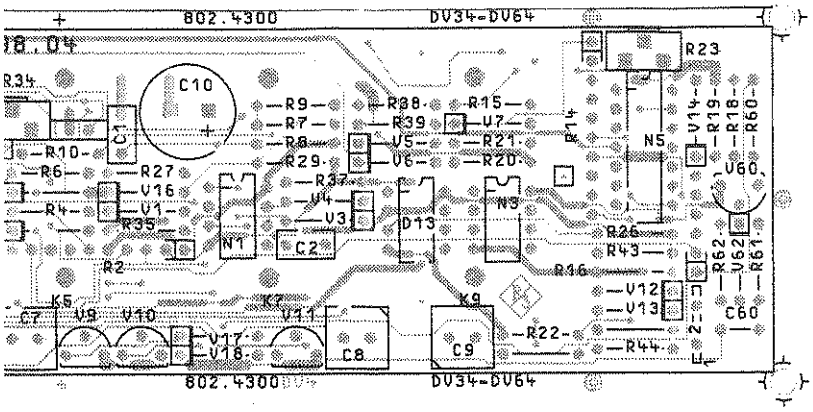

gsführung Lötseite
older side

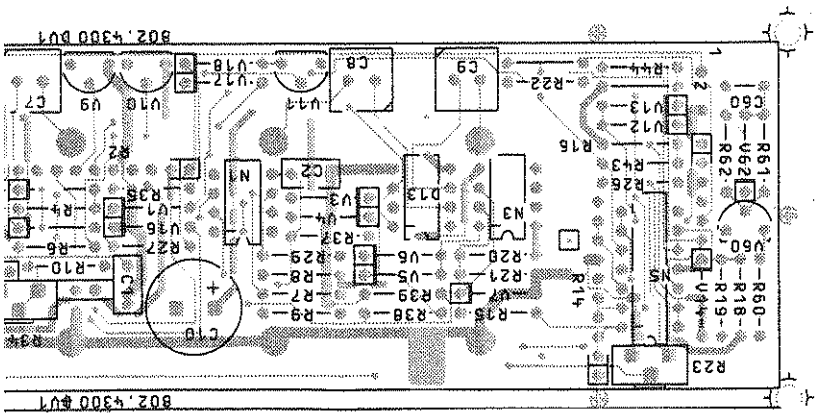

VARIANTENERKLÄRUNG/VERSION
VAR 02 – GRUNDAUSFÜHRUNG/BASIC MODEL
VAR 04 – AUSF. MIT C-NETZ MODIF.

				Maße ohne Toleranzangabe	Maßstab 1 : 1	
					Halbzeug, Werkstoff	
				1KSA / Tag / Name	Benennung	
				Bearb. 05.87 HO	EICHLTG. ANSTEUERUNG	Z
				Gepr.	ATTENUATOR CONTROL	
				Norm		
				ROHDE&SCHWARZ	Zeichn.-Nr. 802.4298.01 ED	Blatt-Nr. 2
Änd. Zust.	Änderungs-Mitteilung	Tag	Name	zu Gerät CMT	reg. i. V. 802.2020 V / erste Z.	v. Bl.

5 6 7 8

07 6001 81

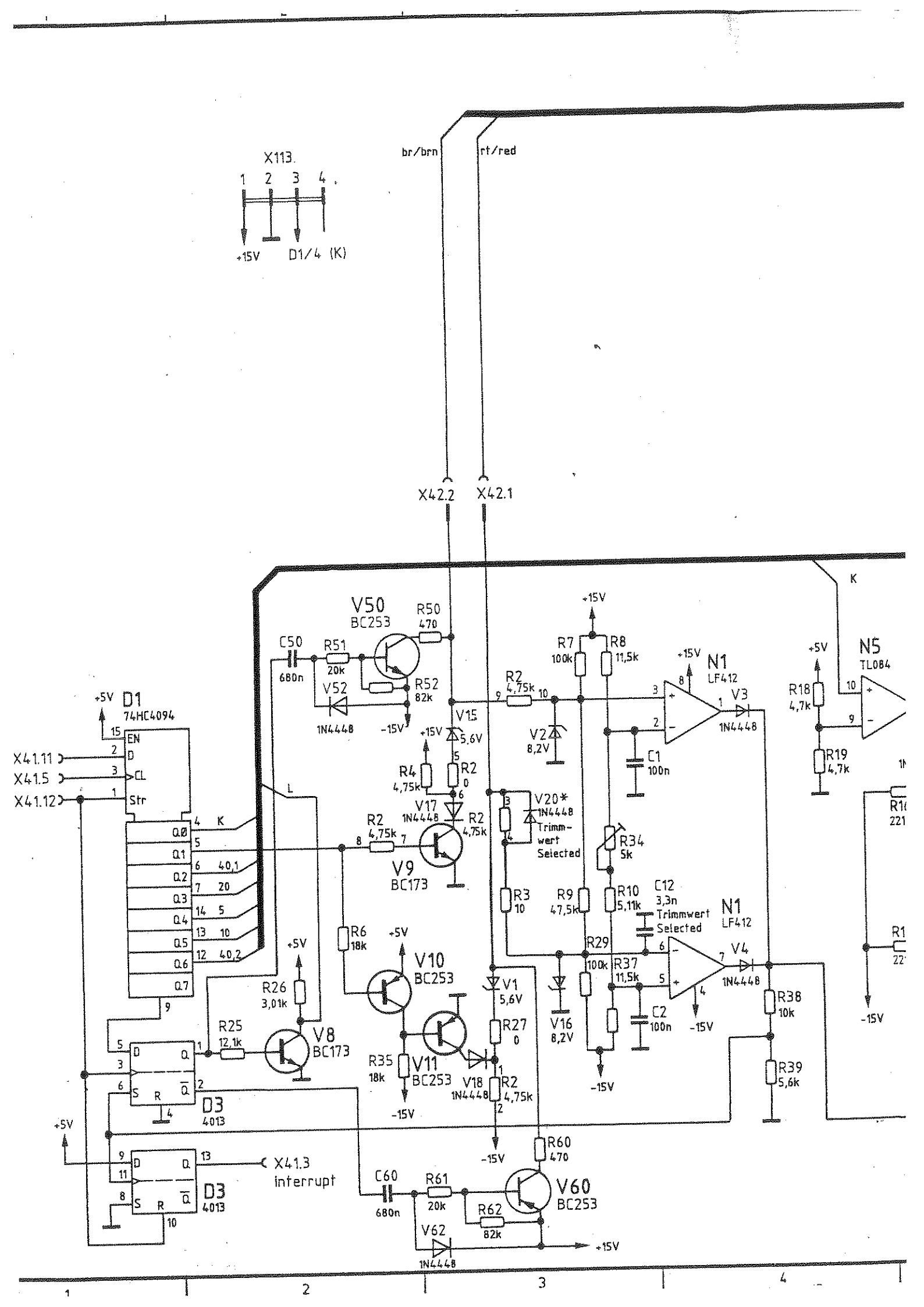
X113.
1 2 3 4
+15V
D1/4 (K)
br/brn
rt/red
X42.2
X42.1
K
V50
BC253
R50
470
C50
680n
R51
20k
R52
82k
V52
1N4448
-15V
+15V
V15
5,6V
R4
4,75k
R2
0
V17
1N4448
R2
4,75k
V9
BC173
R2
4,75k
R7
100k
R8
11,5k
N1
LF412
V3
1N4448
C1
100n
V2
8,2V
V20*
1N4448
Trimm-
wert
Selected
R34
5k
R3
10
R9
47,5k
R10
5,11k
C12
3,3n
Trimmwert
Selected
N1
LF412
V4
1N4448
R29
100k
R37
11,5k
C2
100n
V16
8,2V
R38
10k
R39
5,6k
N5
TL084
R18
4,7k
R19
4,7k
+5V
D1
74HC4094
EN
D
CL
Str
Q.0
Q.1
Q.2
Q.3
Q.4
Q.5
Q.6
Q.7
X41.11
X41.5
X41.12
40,1
20
5
10
40,2
R6
18k
V10
BC253
V11
BC253
R35
18k
V1
5,6V
R27
0
V18
1N4448
R2
4,75k
R26
3,01k
R25
12,1k
V8
BC173
D3
4013
X41.3
interrupt
C60
680n
R61
20k
R62
82k
R60
470
V60
BC253
V62
1N4448
+15V

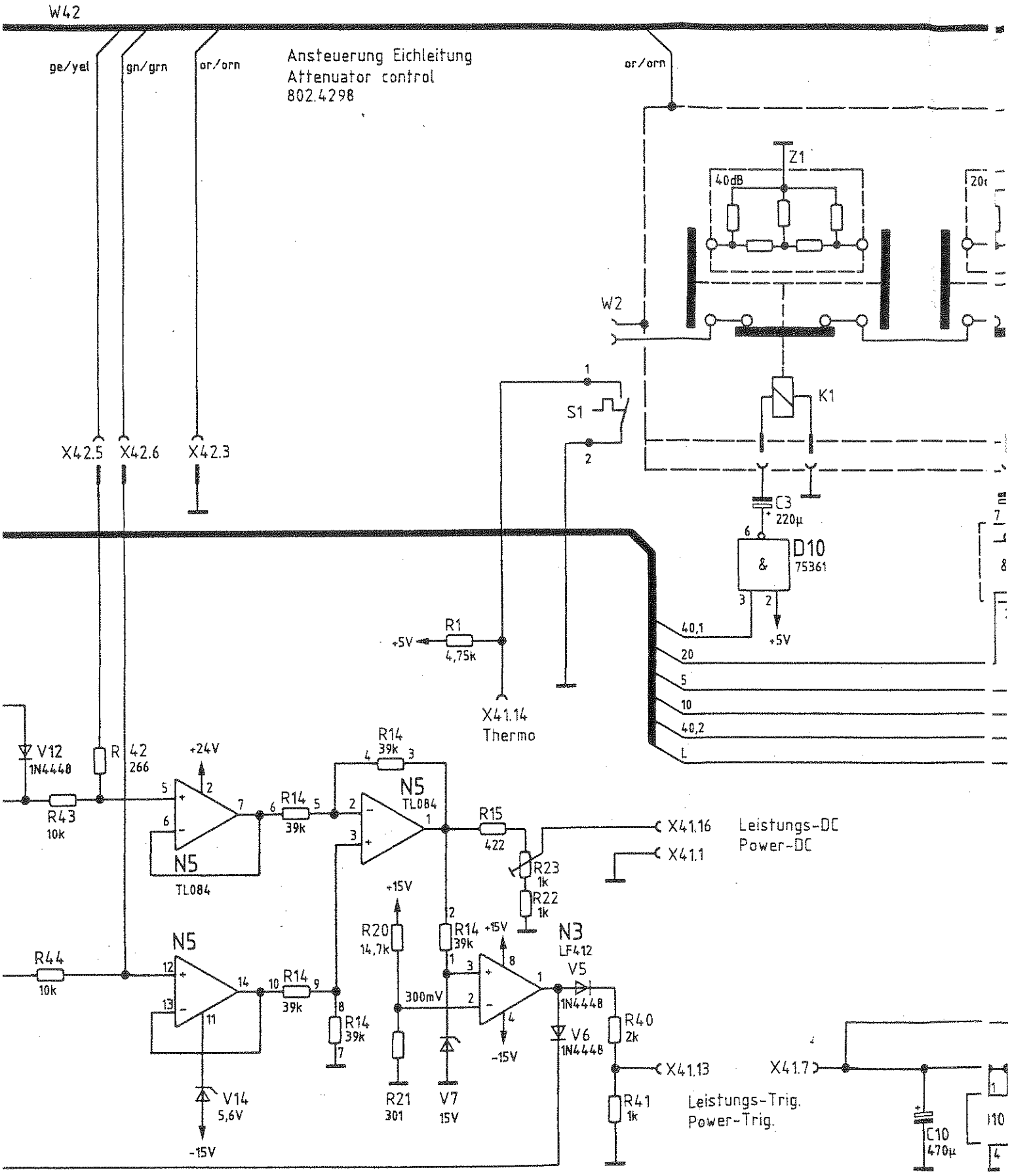
W42
ge/yel
gn/grn
or/orn
Ansteuerung Eichleitung
Attenuator control
802.4298
or/orn
Z1
40dB
W2
S1
K1
X42.5
X42.6
X42.3
C3
220µ
D10
75361
&
+5V
R1
4,75k
+5V
40,1
20
5
10
40,2
L
X41.14
Thermo
V12
1N4448
R42
266
R43
10k
+24V
N5
TL084
R14
39k
N5
TL084
R15
422
X41.16
Leistungs-DC
Power-DC
X41.1
R23
1k
R22
1k
+15V
R20
14,7k
R14
39k
+15V
N3
LF412
V5
1N4448
R44
10k
N5
R14
39k
300mV
R14
39k
V6
1N4448
R40
2k
X41.13
X41.7
V14
5,6V
-15V
R21
301
V7
15V
-15V
R41
1k
Leistungs-Trig.
Power-Trig.
C10
470µ

rt/red

Z11

Z2 20(

Z3 5dB

Z4 10dB

Z5 40dB

Z9

K2 K3 K4 K5

C4 220µ C5 220µ C6 220µ C7 220µ

D11 75361 D12 75361

&

+5V

R33 10 +15V

C10 470µ C11 470µ C33 47µ

D10 D11 D12 D13

X41.8 R30 10 C30 22µ +24V

X41.9 R31 4,7 C31 47µ + 5V

X41.10 R32 10 C32 100µ -15V

Klebekante für Druckerzeugnis · durch diese Zone möglichst nur Leitungen führen

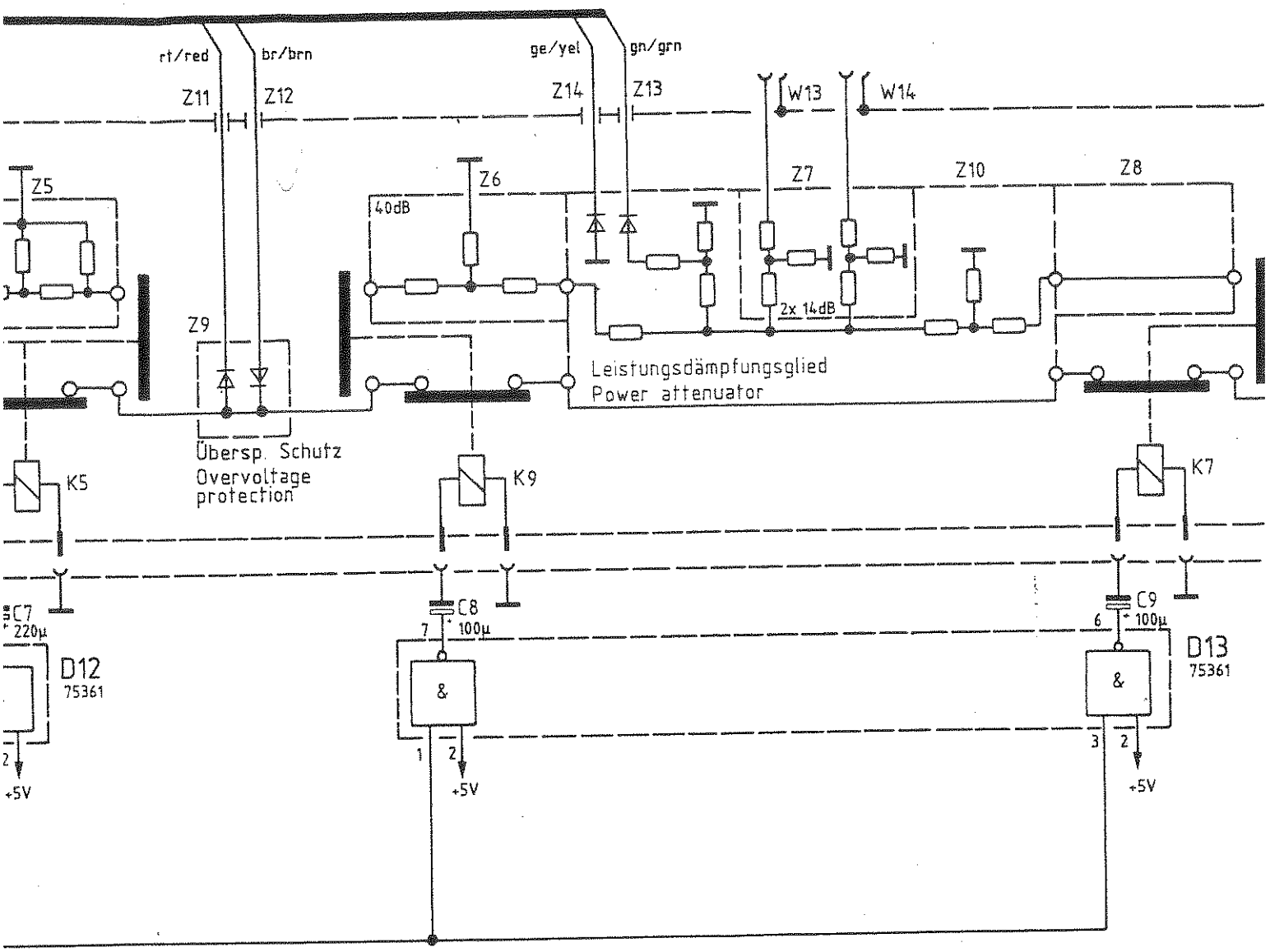

V8....V11

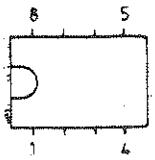

Draufsicht
Top view

N1,N3
D11,D12,D13

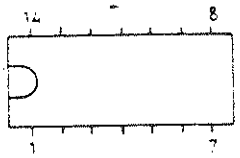

Draufsicht
Top view

N5,D3

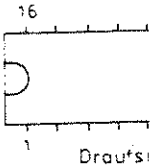

D1

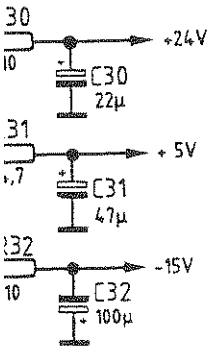

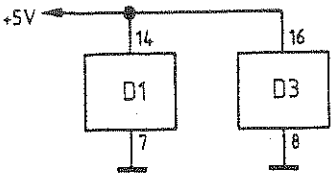

Stromlauf gilt für VAR 04
Circuit diagram is valid for model 04

Stromlauf zu CMT Eichleitung / CMT Attenuator		Z	Zeichn.-Nr. 802.4223 S
CMT	reg. i. V. 802.2020 V	erste Z. 802.2020	

12 13 14 PF 095.4115-0480 15

ROHDE&SCHWARZ

SERVICE INSTRUCTIONS

Analog Unit

802.8435.02

Contents

		Page
5	Service Manual for Analog Unit	5.1
5.1	Function Description	5.1
5.1.1	RF Amplifier	5.1
5.1.2	LO Conditioning	5.3
5.1.3	Demodulators	5.5
5.1.3.1	FM (ΦM) Demodulator	5.5
5.1.3.2	AM Demodulator	5.5
5.1.4	AF Conditioning	5.7
5.1.4.1	Signal Distribution	5.7
5.1.4.2	RMS Path	5.7
5.1.4.3	Peak-value Path	5.8
5.1.4.4	SINAD/Distortion	5.8
5.1.5	DC Amplifier	5.10
5.1.5.1	RMS Meter	5.10
5.1.5.2	DC Multiplexer	5.10
5.1.6	Calibration	5.12
5.1.6.1	Calibration of the RF Synthesizer	5.12
5.1.6.2	Calibration of the DC Multiplexer, Peak-value Meter and RMS Meter	5.12
5.2	Testing and Adjustment	5.13
5.2.1	LEVEL FM R87 Adjustment	5.13
5.2.2	LEVEL AM R88 Adjustment	5.13
5.2.3	LO→TTL R102 Adjustment	5.13
5.2.4	FM DC R213 Adjustment	5.14
5.2.5	DEMOD LEVEL R304 Adjustment	5.14
5.2.6	AM LEVEL R197 Adjustment	5.14
5.2.7	AM SYMMETRY R254 Adjustment	5.14
5.2.8	AM DC R275 Adjustment	5.15
5.2.9	CCITT R388 Adjustment	5.15
5.2.10	LEVEL R543 Adjustment	5.15
5.2.11	BALANCE R542 Adjustment	5.15
5.2.12	1 kHz R557, R556 Adjustment	5.15
5.2.13	990 Hz R566 Adjustment	5.16
5.2.14	1010 Hz R571 Adjustment	5.16
5.2.15	POWER METER Adjustment	5.16

Page

5.3	Troubleshooting	5.17
5.3.1	Removal and Installation of ICs	5.17
5.3.2	Data Channels of the Analog Unit	5.17
5.3.3	Test Points	5.22
5.3.4	Interfaces (Pin Assignments)	5.24
5.3.4.1	Coaxial Connectors	5.24
5.3.4.2	64-contact Multipoint Connector	5.26
5.3.5	Troubleshooting Diagram	5.27

Component lists
Circuit diagrams
Component layout diagrams

5 Service Manual for Analog Unit

(See circuit diagram 802.8435 S and block diagrams 5-1 to 5-5)

5.1 Function Description

The analog unit is divided into the following function units:

- RF amplifier
- LO conditioning
- Demodulator
- AF conditioning
- DC amplifier

It conditions the signals to be measured according to the requirements and converts them into corresponding DC voltages. The analog unit is driven via two separate data channels.

5.1.1 RF Amplifier

(See circuit diagram 802.8435 S, sheet 1 and Fig. 5-1)

The RF amplifier controls the RF signals applied to the two selectable inputs to a constant level and then applies them to the RF counter and the RF input of the mixer. Amplifiers and attenuator pads connected in series suppress the LO mixer signal sufficiently at the inputs of the RF amplifier.

The signal from the power distributor is switched off by a diode switch in order to reduce the crosstalk between the inputs if the switchover relay is switched to the other input. A selectable attenuator pad is connected ahead of the following PIN diode attenuator to increase the dynamic range. The attenuator pad is switched on or off according to the result of the power measurement. A temperature-compensated peak-value rectifier detects the RF signal at the RF counter output and applies it to the integrator to generate the PIN attenuator voltage. The integrator operates with a selectable time constant and reference voltage depending on the type of modulation (FM, ΦM or AM).

The output signal of the rectifier is compared with a reference and a signal is then generated which informs the controller if the signal at the input is too small for the RF counter. The monoflop in this signal path bridges the dips which result with amplitude modulation.

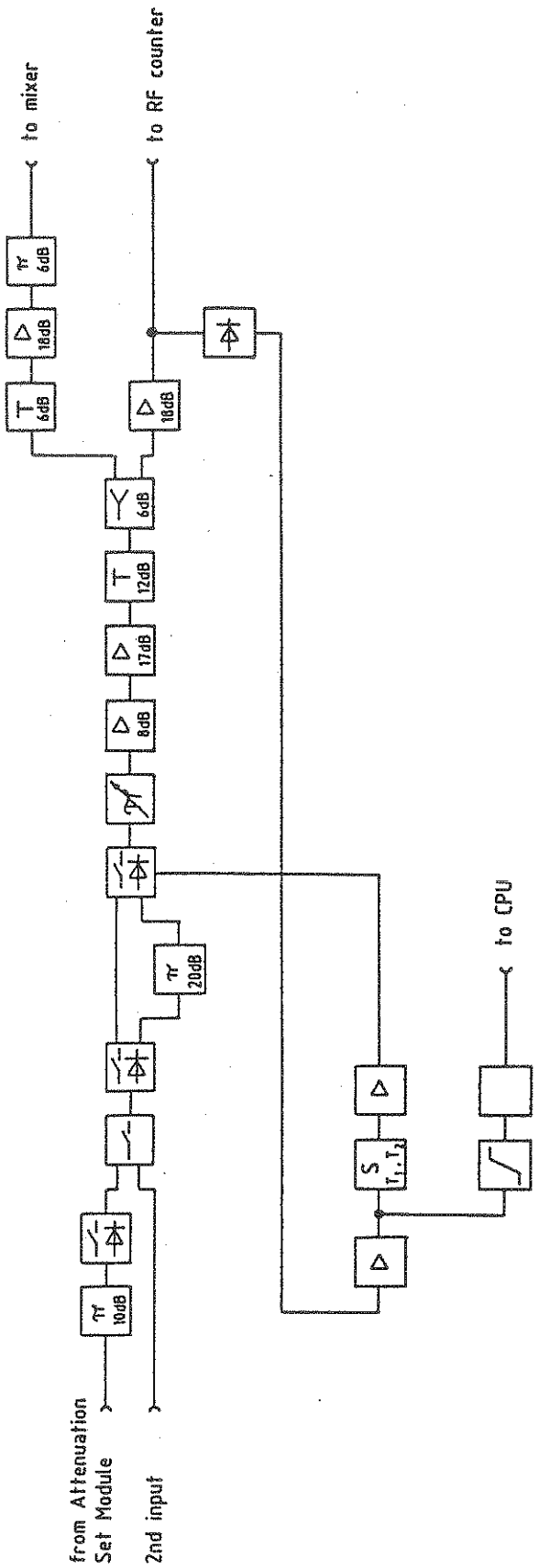

Fig. 5-1 Block diagram of the RF amplifier

5.1.2 LO Conditioning

(See circuit diagram 802.8435 S, sheet 4 and Fig. 5-2)

The RF synthesizer in the instrument generates frequencies in the range from 31.25 MHZ to 1 GHz with a level of -6 dBm ±3 dB for frequency conversion. The LO conditioning circuit generates the level required for mixing and divides the LO frequency to enable evaluation of frequencies <30.795 MHz.

The LO conditioning circuit also generates the test signal for the demodulators. This test signal is generated by dividing the LO frequency to the IF of 455 kHz. This signal path is also used to calibrate the deviation of the RF synthesizer.

The LO signal present at connector X4 is directly applied to the mixer for frequencies >31.25 MHz via a selectable amplifier and a PIN diode switch. Frequencies in the range from 31.25 MHz to 62.5 MHz are amplified to TTL level and applied to the frequency dividers. A 1:2 divider is connected in series with the programmable 7-bit divider in order to achieve a duty factor of 0.5. This arrangement enables dividing factors of 1/2, 1/4, 1/4(N+1), (N=Ø to 127) to be set. Unrequired dividers are switched off to suppress subharmonics.

The output signal of the programmable divider is applied to the test generator. This divides the frequency to 455 kHz and passes it on to the demodulators via a selectable voltage divider. The voltage divider can be bypassed using a switch which is opened and closed at the rate of 222 Hz (455 kHz : 2048). The result is amplitude modulation with a modulation frequency of approx. 110 Hz and a modulation depth of approx. 45%. If the RF demodulator is to be tested, permanently close the switch and frequency-modulate the input signal to the LO conditioning circuit.

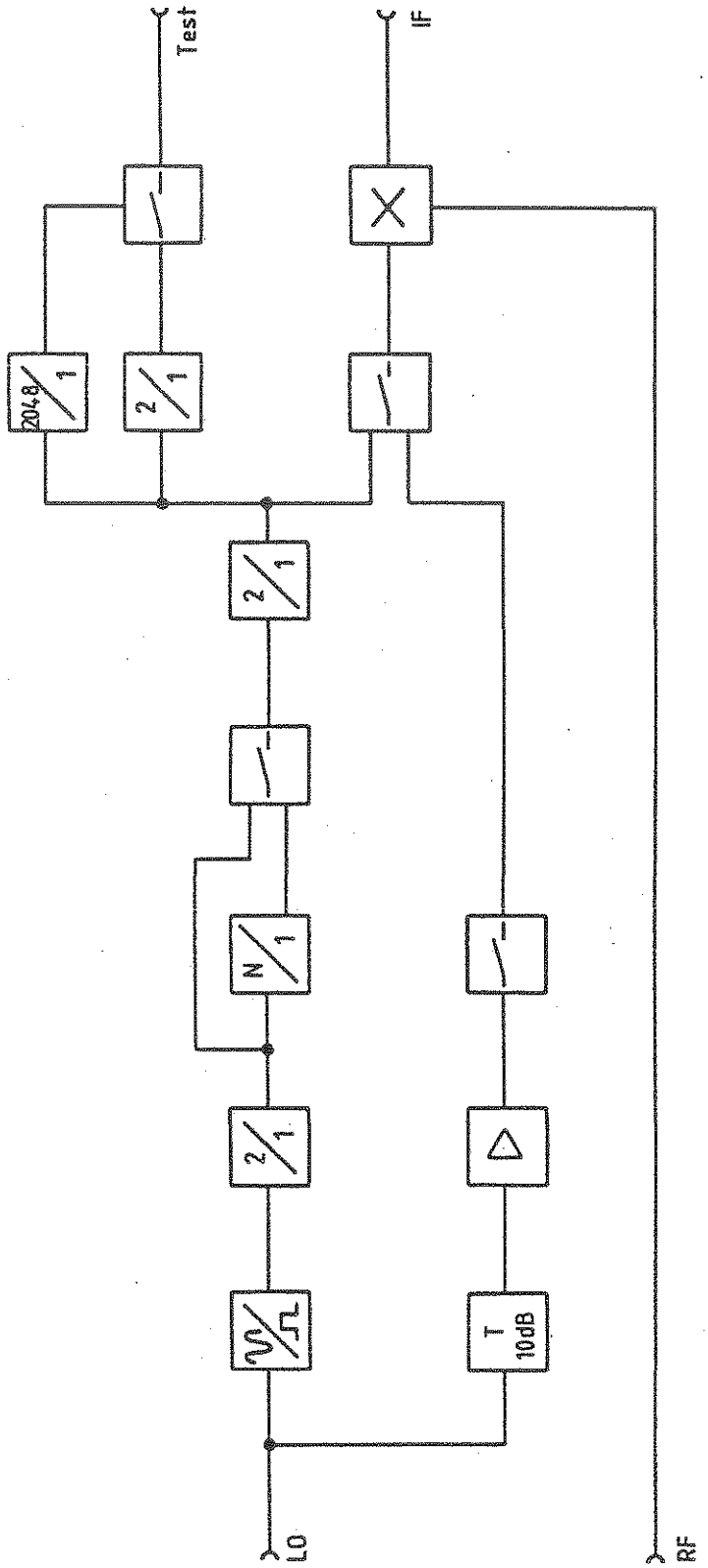

Fig. 5-2 Block diagram of the LO conditioning circuit

5.1.3 Demodulators

(See circuit diagram 802.8435 S, sheet 3 and Fig. 5-3)

This section conditions the frequency and level of the RF signals converted in the mixer and demodulates them according to the type of modulation AM, FM, ΦM.

The RF signal converted in the mixer to the IF centre frequency of 455 kHz is applied to the first low-noise amplifier stage via a 725-kHz lowpass which suppresses undesired mixer products. The signal is then applied directly or via a further amplifier with a series-connected 25-kHz bandpass filter to the regulated (AM) or limiting amplifier (FM, ΦM). The bandpass filter is used for selection with remote measurements and adjacent-channel power measurements.

5.1.3.1 FM (ΦM) Demodulator

The FM demodulator operates according to the principle of a counter discriminator. The FM signal is converted in a limiter into squarewave pulses of constant width (monoflop); both the positive and negative edges of the FM signal are used for triggering. Twice the IF, in this case 910 kHz, is thus present at the monoflop output. If the pulses of constant width are integrated, a DC voltage is produced which is proportional to the number of pulses per unit of time and thus the frequency of the input signal; the AC voltage component is the required demodulated AF voltage. Since the phase modulation corresponds to the frequency modulation when the modulated signal is integrated, the counter discriminator is also suitable for demodulating phase-modulated signals. A suitable filter corrects the frequency response of the demodulated signal.

The FM demodulator is frequency-linear up to 20 kHz; deemphasis with a time constant of 750 µs can be connected if required.

5.1.3.2 AM Demodulator

The AM demodulator operates as a bidirectional rectifier with subsequent lowpass filters. The AC voltage components are filtered out from the output signal of the rectifier and the remaining DC voltage applied via an integrator to the controlled amplifier; the DC voltage is used with FM to switch the signal path on and off (squelch function) since it is a measure of the signal strength of the IF.

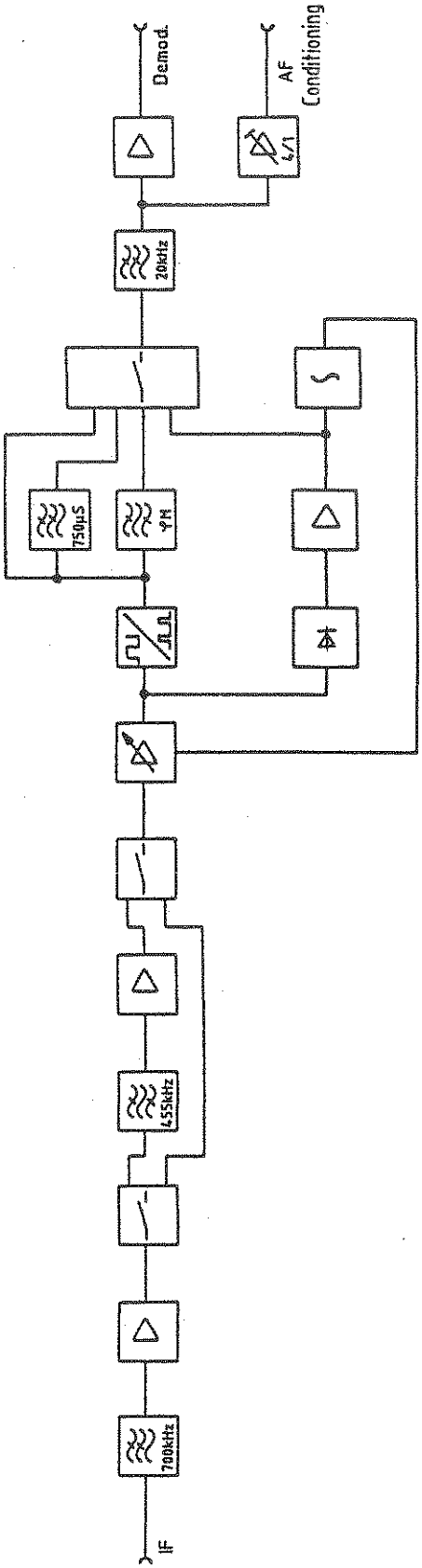

Fig. 5-3 Block diagram of the demodulators

5.1.4 AF Conditioning

(See circuit diagram 802.8435 S, sheet 2 and Fig. 5-4)

The AF conditioning circuit processes the two main AF paths in the instrument (demodulated and externally applied AF signals), weights them and applies them to the meter rectifiers, the oscilloscope (if fitted), the loudspeaker amplifier, the tone sequence decoder and the AF counter.

5.1.4.1 Signal Distribution

The external AF signal is applied directly to the main signal switch via a selectable 20-dB attenuator pad and also via the selectable CCITT filter.

The demodulated signal is applied to the main signal switch directly via a selectable 300-Hz highpass filter to suppress any pilot tones and/or via the selectable CCITT filter. The following combinations are therefore possible at the output of the switch:

AF external	Demodulated signal
Demodulated signal	-
AF external, CCITT	Demodulated signal
Demodulated signal, CCITT	Demodulated signal
AF external	AF external, CCITT
AF external	Demodulated signal, CCITT

Using further selectors it is possible to apply each of these signals to the peak-value meter, rms meter, SINAD meter, tone sequence decoder, AF counter, loudspeaker and oscilloscope.

5.1.4.2 RMS Path

The rms signal to be evaluated is applied to the 150-Hz highpass filter via a selectable 40/0-dB amplifier whose gain is determined from the result of the rms measurement. The highpass filter is connected when measurements are made in FAST mode (cf. Section 5.1.5, DC Amplifier). The signal is applied to the DC amplifier via three calibration switches which are required to determine the offset and gain errors of the rms meter.

5.1.4.3 Peak-value Path

The peak-value path is similar to the rms path. A signal inverter is fitted instead of the 150-Hz highpass filter so that the positive and negative peaks of the signal can be measured in the case of demodulation since the peak-value meter only detects positive signals.

Prior to the inverter, the external modulation signal connected via the modulation control is applied to the peak-value meter via a selector to enable calibration if necessary.

5.1.4.4 SINAD/Distortion

The SINAD/distortion meter is basically a controlled amplifier with a series-connected notch filter. A constant rms value is used as the setpoint; the output signal of the amplifier is square-rooted, integrated and applied to the controller, an OTA in the negative feedback path of the amplifier. The fundamental frequency (1 kHz) is subsequently filtered and the rms weighted from the regulated signal. A three-pole notch filter with pole frequencies at 990 Hz, 1 kHz and 1.01 kHz is used as the filter in order to intercept small differences between the fundamental frequency and the pole frequency.

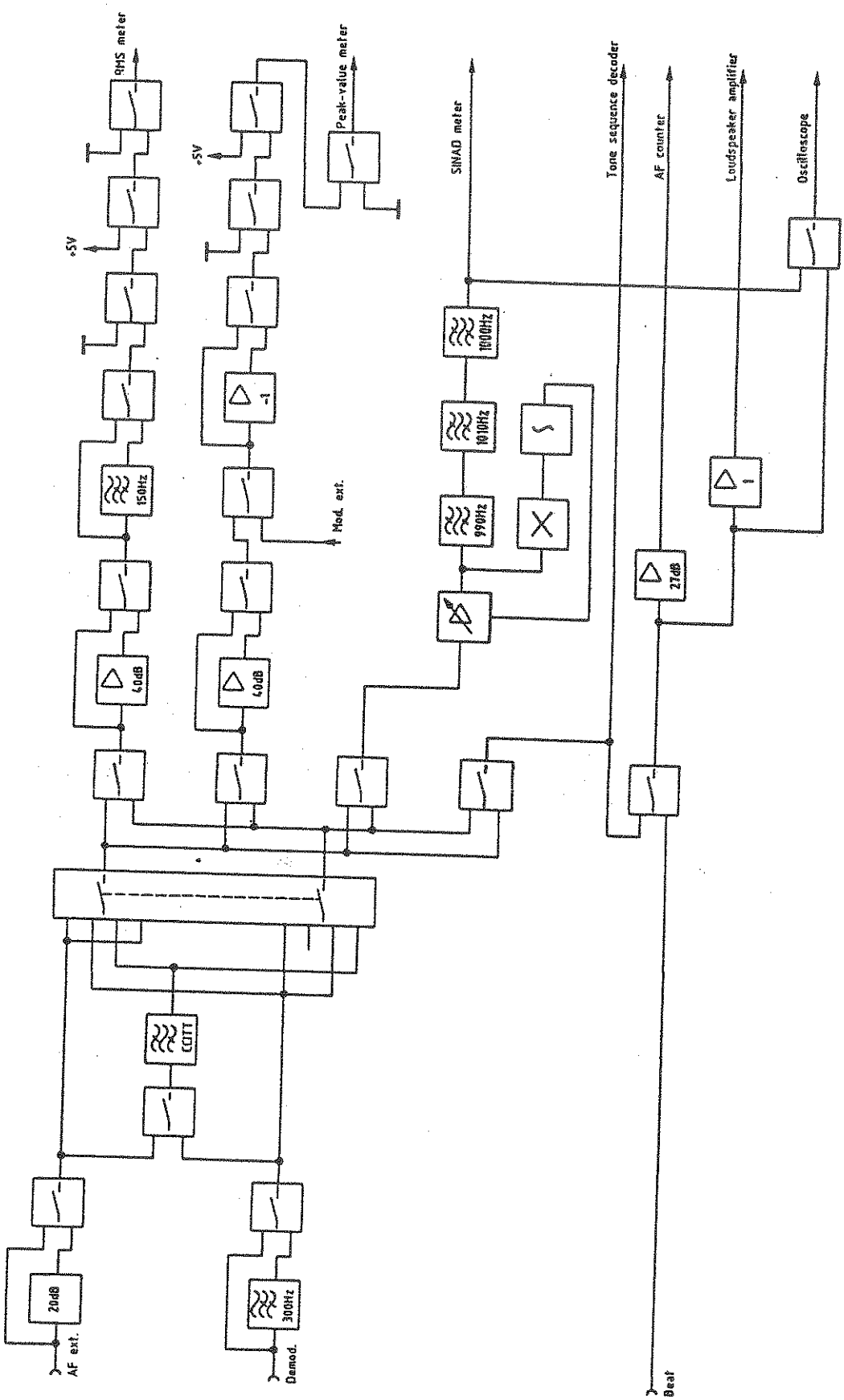

Fig. 5-4 Block diagram of the AF conditioning circuit

5.1.5 DC Amplifier

(See circuit diagram 802.8435 S, sheet 5 and Fig. 5-5)

The DC amplifier circuit conditions the incoming AC and DC voltages for the subsequent A/D converter.

5.1.5.1 RMS Meter

The rms meter is an IC which basically multiplies the input signal and subsequently generates the mean value. The rms meter is operated in two modes, fast and slow, in order to achieve a higher measuring rate. The selection of the two modes involves, on the one hand, changing the charging capacitor required to generate the mean value and, on the other, the switchover of the cut-off frequency of a 4th order lowpass filter with an optimized transient response connected in series with the IC. The cut-off frequencies of the input voltages are 50 Hz in the slow mode and 150 Hz in the fast mode. A 2nd order highpass filter is connected ahead of the rms meter to prevent AC voltages to be superimposed on the DC output voltage at input voltages <150 Hz in the fast mode (see Section 5.1.4.2, RMS Path).

5.1.5.2 DC Multiplexer

All DC voltages to be measured are combined and cyclically scanned on the DC multiplexer. A selectable amplifier ensures that the subsequent A/D converter operates in a high resolution range as far as possible.

The DC voltages applied to the DC multiplexer are:

- Peak-value meter (demodulation, MOD.EXT. input)
- RMS meter (AF voltmeter, spurious modulation)
- Distortion/SINAD meter
- Power measurement
- AM demodulator
- Adjacent-channel power meter
- +5-V calibration voltage
- PIN control voltage of the RF amplifier
- Self-test voltages
- RF millivoltmeter
- Ground

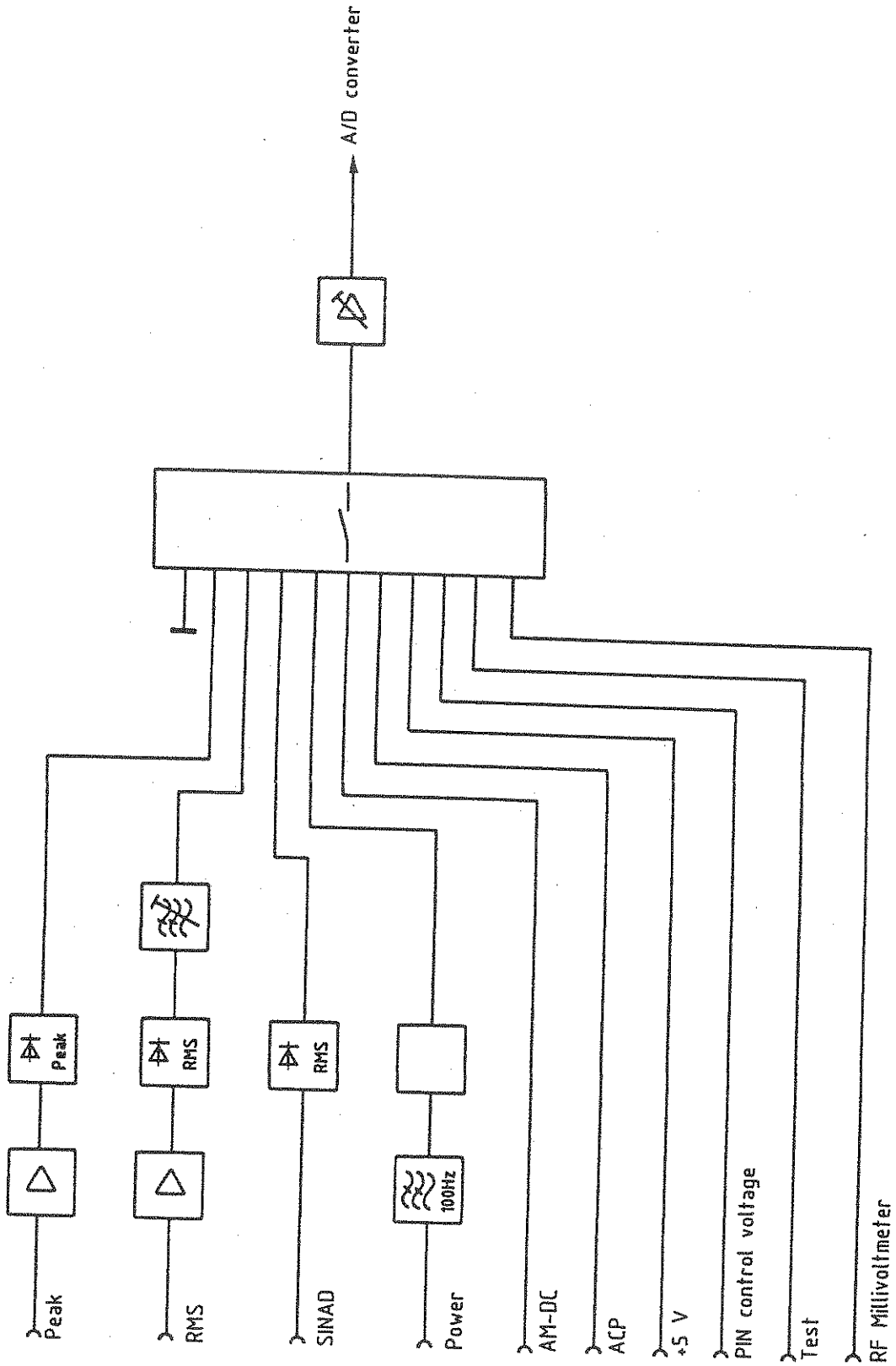

Fig. 5-5 Block diagram of the DC amplifier

5.1.6 Calibration

The analog unit of the instrument contains a number of calibration routines which counteract influences such as aging and temperature fluctuations.

The main calibration routines are:

Calibration of the
- RF synthesizer
- peak-value meter
- rms meter
- DC multiplexer.

5.1.6.1 Calibration of the RF Synthesizer

The RF synthesizer is calibrated with respect to the FM characteristics; a specific deviation is set at a defined RF frequency, measured by the analog unit and stored as a reference value. The signal required in the transmitter test for mixing is divided on the LO conditioning circuit to the IF of 455 kHz, applied to the FM demodulator via the test generator and then measured and stored in the usual way.

5.1.6.2 Calibration of the DC Multiplexer, Peak-value Meter and RMS Meter

The corresponding IC is calibrated by connecting its input to ground via a switch and then measuring the offset voltage. In order to correct gain errors, an extremely accurate reference voltage of +1 V_{DC} is applied, measured and stored as a correction factor. For measuring the offset voltage, the input of the corresponding IC is connected to ground. In addition, an AC voltage of 40 mV is applied to the rms meter from outside. Since offset voltages can be strongly temperature-dependent, this calibration is carried out immediately after the instrument is switched on and repeated cyclically at extended intervals of time.

5.2 Testing and Adjustment

Basic setting of the module is to be performed before each adjustment:

*

1	1	1	1	0	0	0	0	0	0	0	1	0	0	0	0	0	0	1	0	0	0	0	0	0	0	0	0	0	0	0	0

1	1	0	1	1	1	1	0	0	0	1	1	1	1	0	0	0	0	0	0	0	0

* 1st bit of the shift register,
last bit to be shifted in.

The designations of the adjustments refer to the front panel labels.

5.2.1 LEVEL FM R87 Adjustment

(See circuit diagram 802.8435 S, sheet 1)

Setting: Bit No. 1=H, 2=H, 3=H, 4=H

→ Terminate X609 with 50 Ω.
→ Apply 500 MHz, 20 mV to X601.
→ Adjust level at X610 to 150 mV ±10 mV using R87.

5.2.2 LEVEL AM R88 Adjustment

(See circuit diagram 802.8435 S, sheet 1)

The LEVEL FM R87 adjustment must have been carried out before starting this adjustment.

Setting: Bit No. 3=L, 4=L

→ Terminate X609 with 50 Ω.
→ Apply 500 MHz, 20 mV to X601.
→ Adjust level at X610 to 75 mV ±5 mV using R88.

5.2.3 LO TTL R102 Adjustment

(See circuit diagram 802.8435 S, sheet 4)

Setting: Bit No. 48=H, 49=H

→ Apply 62.5 MHz -3 dBm ±3 dB to X608.
→ Set TTL level at D100/3 using R102.
→ Check whether TTL level with half the input frequency is present at P30.

5.2.4 FM DC R213 Adjustment

(See circuit diagram 802.8435 S, sheet 3)

Setting: Basic setting

→ Apply 500 MHz, 20 mV to X601.
→ Apply 500.455 MHz, -6 dBm ±3 dBm to X608.
→ Terminate X610 with 50 Ω.
→ Connect X609 to X607.
→ Apply 10 V ±0.5 mV to X1.A21.
→ Adjust DC voltage at X602 to 0 V ±5 mV using R213.

5.2.5 DEMOD LEVEL R304 Adjustment

(See circuit diagram 802.8435 S, sheet 3)

Setting: Basic setting

Repeat the first five steps given in 5.2.4:

→ Apply 500 MHz, 20 mV, 100 kHz deviation and 1 kHz AF to X601.
→ Adjust rms voltage at X602 to 3.535 V ±1 mV (corresp. to 5 V_p) using R304.

5.2.6 AM LEVEL R197 Adjustment

(See circuit diagram 802.8435 S, sheets 3/5)

Setting: Bit No. 3=L, 4=L, 35=H, 36=L, 37=L
Same as in 5.2.4 except:

→ Apply 500 MHz, 20 mV, 99% AM and 1 kHz AF to X601.
→ Adjust DC level at D680/1 to 250 mV ±2 mV using R197.

This adjustment influences the AM DC R275 and AM SYMMETRY R254 adjustments and these must therefore be readjusted.

5.2.7 AM SYMMETRY R254 Adjustment

(See circuit diagram 802.8435 S, sheet 3)

Setting: As in 5.2.6

Same as in 5.2.6.

→ Connect oscilloscope to X602.
→ Adjust the limitation of the bottom 1-kHz half-wave to a minimum using R254.

This adjustment influences the AM DC R275 adjustment and this must therefore be readjusted.

5.2.8 AM DC R275 Adjustment
(See circuit diagram 802.8435 S, sheet 3)

The DEMOD LEVEL R304, AM LEVEL R197 and AM SYMMETRY R254 adjustments must already have been carried out.

Setting: As in 5.2.6

Same as in 5.2.6.

→ Adjust rms voltage at X602 to 3.535 V ±1 mV (corresp. to 5 V_p) using R275.
→ Check the AM LEVEL R197 adjustment.

5.2.9 CCITT R388 Adjustment
(See circuit diagram 802.8435 S, sheet 2)

Setting: Bit No. 17=L, 18=H

→ Apply 800 Hz, 1 V_{rms} to X603.
→ Adjust the rms voltage at P15 to 1 V ±1 mV using R388.

5.2.10 LEVEL R543 Adjustment
(See circuit diagram 802.8435 S, sheet 2)

Setting: Basic setting

→ Apply 1 kHz, 500 mV to X22/2.
→ Adjust rms voltage at X23/1 to 1 V ±5 mV using R543.

5.2.11 BALANCE R542 Adjustment
(See circuit diagram 802.8435 S, sheet 2)

Setting: Basic setting

→ Apply 1 kHz, 500 mV to X22/2.
→ Adjust an accurate $\sin^2$ using R542.

5.2.12 1 kHz R557, R556 Adjustment
(See circuit diagram 802.8435 S, sheet 2)

Setting: Basic setting

→ Apply 1 kHz, 1 V to X23/2.
→ Adjust the minimum voltage at P24 using R556 and R557 alternately.

5.2.13 990 Hz R566 Adjustment

(See circuit diagram 802.8435 S, sheet 2)

Setting: Basic setting

→ Apply 1 V, 990 Hz to X23/2.
→ Adjust to minimum voltage at P25 using R566.

5.2.14 1010 Hz R571 Adjustment

(See circuit diagram 802.8435 S, sheet 2)

Setting: Basic setting

→ Apply 1 V, 1010 Hz to X23/2.
→ Adjust to minimum voltage at P26 using R571.

5.2.15 POWER METER Adjustment

(See circuit diagram 802.8435 S, sheet 5)

The adjustment is made in the instrument (see Service Manual for Complete Instrument, Section 4).

5.3 Troubleshooting

5.3.1 Removal and Installation of ICs

The analog unit is a multilayer module, i.e. the printed circuit consists of several boards adhered together. Great care must therefore be taken when removing ICs. The ICs must be completely freed from tin using a desoldering tool and gently removed from the holes since the lead-through bushes could otherwise be torn and thus lines detached from the central layers.

The solder side of the module contains chip capacitors, chip resistors and chip ICs. Since these ICs are also adhered (automatic fitting), they should only be unsoldered if known for certain to be faulty; the ICs are often mechanically damaged because of the high soldering temperatures required so that corresponding spare parts should be available. New ICs should first be fixed using a non-conducting adhesive and then soldered at a low temperature using a very fine soldering iron.

An important indication of a mechanical defect in ICs (break in the substrate support, splitting or overheating of the soldered connections) is the function of the IC at frequencies above approx. 100 MHz; this particularly applies to chip capacitors.

5.3.2 Data Channels of the Analog Unit

The analog unit is addressed by the controller via two separate data channels (56-bit and 12-bit wide). The following tables listing the IC connections and the function can be used to test these data channels.

Table 5-1 Slow data channel

Component	Function	Function with H level
D97/4	Selection of X601 or X604 as input	X601
D97/5	Switch on/off the 20-dB attenuator pad	Switched off
D97/6	FM/AM time constant of control	FM
D97/7	RF level at X609 / 50 mV or 25 mV corresp. to FM or AM, respectively	50 mV, FM
D97/14	None	---
D97/13	None	---
D97/12	None	---
D97/11	None	---
D465/4	Connect calibration switch A ahead of rms meter to continuity or ground	Ground
D465/5	Connect calibration switch B ahead of rms meter to continuity or +5 V	+5 V
D465/6	Switch on/off 40-dB amplifier in peak-value path	40 dB switched on
D465/7	Connect MOD. EXT signal to peak-value meter	Switched off
D465/14	None	---
D465/13	Switch on/off 40-dB amplifier in rms path	40 dB switched on
D465/12	Switch on/off 150-Hz HP in rms path	150-Hz HP switched on
D465/11	None	---
D466/4	Switch on/off 20-dB attenuation at AF input	20 dB switched on
D466/5	Connect AF or demodulation signal to CCITT filter	AF signal
D466/6	Switch on/off 300-Hz HP in demodulation branch	Switched off
D466/7	None	---
D466/14	Connect beat or AF/demodulation signal to loudspeaker, AF counter, oscilloscope	Beat signal
D466/13	Connect AF or demodulation signal to peak-value path	AF signal
D466/12	Main distribution switch	See Table 5-2
D466/11	Main distribution switch	See Table 5-2

Component	Function	Function with H level
D467/4	Connect AF/demodulation/beat or pole filter signal to oscilloscope	Pole filter signal
D467/5	Connect calibration switch C ahead of rms meter to continuity or ground	Ground
D467/6	Connect rms or peak-value path to loudspeaker, AF counter, oscilloscope	Peak-value path
D467/7	Connect rms or peak-value path to distortion control	rms path
D467/14	Connect cailbration switch C ahead of peak-value meter to continuity or ground	Ground
D467/13	Connect calibration switch B ahead of peak-value meter to continuity or +5 V	+5 V
D467/12	Connect calibration switch A ahead of peak-value meter to continuity or ground	Ground
D467/11	Connect AF or demodulation signal to rms path	AF signal
D320/4	IF distribution switch	See Table 5-3
D320/5	IF distribution switch	See Table 5-3
D320/6	Switch on/off FM demodulator	Switched off
D320/7	Selection of demodulation	See Table 5-4
D320/14	Selection of demodulation	See Table 5-4
D320/13	Switch on/off demodulation signal	Switched on
D320/12	Switch on/off automatic IF level system (squelch)	Switched off
D320/11	Gain of demodulation signal, G = 1 or G = 4	G = 4
D104/4	None	---
D104/5	None	---
D104/6	Switch on/off calibration generator	Switched off
D104/7	Modulation of calibration generator, AM or FM	AM
D104/14	None	---
D104/13	Divider factor of LO conditioning	See table 5-5
D104/12	Divider factor of LO conditioning	See table 5-5
D104/11	Switch on/off first divider in LO branch	Switched on
D105/4	LO frequency <31.25 MHz or >31.25 MHz	>31.25 MHz

Table 5-2 Main distribution switch

D466/12	13	Function	
		RMS path	Peak-value path
L	L	AF signal	Demodulation signal
L	H	Demodulation signal	Ground
H	L	CCITT filter	Demodulation signal
H	H	AF signal	CCITT filter

Table 5-3 IF distribution switch

D320/4	5	Function
L	L	IF narrowband, 25 kHz
L	H	IF wideband
H	L	Calibration of RF synthesizer, test
H	H	Calibration of adjacent-channel power filter

Table 5-4 Selection of demodulation

D320/7	14	Function
L	L	AM demodulation
L	H	FM demodulation with deemphasis
H	L	ΦM demodulation
H	H	FM demodulation

Table 5-5 Divider factor of LO conditioning

D104/13	12	Function
L	L	Divider factor : 2
L	H	Switched off
H	L	Divider factor : 4
H	H	Divider factor : 4 (N+2)

The divider factor N is determined by the data at D105;
H level corresponds to divider factor 0.
The MSB is D105/5, the LSB is D105/11; the data width is 7 bit.

Table 5-6 Gain of DC amplifier

D698/4	5	6	Function
L	L	L	0 dB
L	L	H	6 dB
L	H	L	16 dB
L	H	H	26 dB
H	L	L	36 dB
H	L	H	46 dB
H	H	L	56 dB
H	H	H	inpermissible

Table 5-7 DC multiplexer

D698/7	14	13	Function
L	L	L	Peak value
L	L	H	rms value
L	H	L	Distortion
L	H	H	Power
H	L	L	AM DC
H	L	H	RF millivoltmeter
H	H	L	Adjacent-channel power
H	H	H	Test voltages

Table 5-8 Peak-value meter

D698/12	11	Function
L	L	Measure peak value
L	H	Hold peak value
H	L	Reset peak value
H	H	---

Table 5-9 Premultiplexer

D697/5	4	Function
L	L	Test voltages / slow rms measurement
L	H	Ground / slow rms measurement
H	L	PIN control voltage / fast rms measurement
H	H	+5-V calibration voltage/ fast rms measurement

D697/4: Switchover to positive or negative peak value.
L level corresponds to negative peak value.

5.3.3 Test Points

Circuit diagram 802.8435 S, sheet 3 (demodulators)

P1 Amplified output signal of mixer.
In normal mode, frequency f_{IF} = 455 kHz, level approx. 135 mV (typical).

P2 Control voltage for controlled amplifier.
In normal mode with AM demodulation approx. 2 to 6 V_{DC}, with FM demodulation approx. 2 V.

P3, P4 Difference outputs of controlled amplifier.
In normal mode with AM demodulation, no clipped signal $V_{pp} \approx 1$ V; with FM demodulation, squarewave signal of approx. 2.8 V_{pp}.

P5 Sum of signals at P3 und P4.

P6 Voltage of -5 V generated from the 10-V reference voltage.
Tolerance ±1% + tolerance of reference.

P7 +5 V, otherwise as P6.

P8 Output signal of FM demodulator.
TTL level, frequency 910 kHz.

P10 Amplified signal of P9.
Level: V_{pp} = 10 V corresponding to tolerance of reference voltage.

P11 Output signal of ΦM filter.

P12 Output signal of AM demodulator.
Positive full-wave rectified signal of P5.

P13 Signal to switch the demodulated signal on/off.

Circuit 802.8435 S, sheet 2 (AF conditioning)

P14 AF signal at X603 divided by 1 or 10.

P15 Output signal of CCITT filter.

P16 Selectable input/output signal of 300-Hz highpass.

P17 Output signal of 150-Hz highpass.

P18 Signal to rms meter.

P19 Signal to peak-value meter.

P20 Negative operating voltage to supply the CMOS switches, V_{DC} = -10 V ±5% + tolerance of -15 V operating voltage.

P21 Positive operating voltage to supply the CMOS switches, V_{DC} = 6 V ±10%

P24 Output signal of 1-kHz notch filter.

P25 Output signal of 990-Hz notch filter.

P26 Output signal of 1010-Hz notch filter.

Circuit diagram 802.8435 S, sheet 4 (LO conditioning)

P30 Frequency at X608 divided by 2.
Frequency range 15.625 to 31.25 MHz,
level: TTL.

5.3.4 Interfaces (Pin Assignments)

5.3.4.1 Coaxial Connectors

X601 Low level range input of RF amplifier.
Impedance: 50 Ω
Level: 5 to 500 mV
Frequency: 1 to 1000 MHz

X602 Demodulated signal.
Impedance: 600 Ω
Frequency: DC to 20 kHz
Level: 5 V_p corresp. to 100 kHz ΔF
5 V_p corresp. to 100% AM
5 V_p corresp. to 25 rad ΔΦ

With ΦM, frequency range 300 Hz to 10 kHz.

X603 AF voltmeter input.
Impedance: ≥100 kΩ
Frequency: 50 Hz to 50 kHz
Level: 100 μV to 35 V

X604 High level range input of RF amplifier.
Impedance: 50 Ω
Frequency: 1 to 1000 MHz
Level: 31.6 mV to 1.58 V

X605 Output for oscilloscope.

X606 IF output for adjacent-channel power.
Impedance: 1.5 kΩ
Frequency: 455 kHz ±12.5 kHz
Level: approx. 250 mV

X607 RF input of mixer.
Impedance: 50 Ω
Frequency: 1 to 1000 MHz
Level: 50 mV ±3 dB FM
25 mV ±3 dB AM

X608 LO input.
Impedance: 50 Ω
Frequency: 31.25 to 1000 MHz
Level: -3 dBm ±3 dB 31.25 ≤ f ≤ 62.5 MHz
-6 dBm ±3 dB 62.5 ≤ f ≤ 1000 MHz

X609 RF output of RF amplifier.
Impedance: 50 Ω
Frequency: 1 of 1000 MHz
Pegel: 50 mV ±3 dB FM
25 mV ±3 dB AM

X610 Counter output of RF amplifier.
Impedance: 50 Ω
Frequency: 1 to 1000 MHz
Level: 150 mV ±3 dB FM
75 mV ±3 dB AM

5.3.4.2 64-contact Multipoint Connector

1a	Output for controller: RF level too small (CMOS level)
1b	Power supply +5 V
3a	Strobe for fast data channel
3b	Clock for fast data channel
4a	Strobe for slow data channel
4b	Data for fast data channel
8a	Data for slow data channel
10a,b	Clock for slow data channel
12a,b	Power supply +5 V
17a,b	Power supply +15 V
18b	Output for AF counter
19a,b	Power supply -15 V
21a	10-V reference voltage input
25a	Output for loudspeaker amplifier
26a	Input to measure MOD.EXT.
27a	Self-test voltages input
27b	Power measurement input
28a	RF millivoltmeter input
29a	Adjacent-channel power meter input
30a,b	Output of signal ground for A/D converter
31b	Output of DC voltage for A/D converter

5.3.5 Troubleshooting Diagram

Incorrect or no demodulation measurement

Correct demod. signal at X602 ?
5 V_p corresp. to 100 kHz, 100% AM, 25 rad

Yes → DC amplifier, AF conditioning

No ↓

Fault only with AM ?

Yes → RF amplifier, AM demodulation

No ↓

IF of 455 kHz at P1 ?

Yes → FM demodulator, squelch, controlled amplifier

No ↓

Fault only with F < 31.25 MHz ?

Yes → Divider in LO conditioning

No ↓

RF synthesizer OK ?

No → RF synthesizer

Yes ↓

Frequency counter OK ?

Yes → Mixer, LO conditioning

No ↓

Demodulation via INPUT2 OK ?

Yes → RF amplifier, switchover

No ↓

RF amplifier

ROHDE & SCHWARZ
MÜNCHEN

Schaltteillisten
Stromläufe
Bestückungspläne

Parts lists
Circuit diagrams
Components plans

R 29500 Bl. 2

ROHDE&SCHWARZ	ÄZ	Datum Date	Schaltteilliste für Parts list for	Sachnummer Stock Nr.	Blatt Page
	07	1087	ED ANALOGTEIL	802.8435.01 SA	1

Kennzeichen Component No.	Benennung/Beschreibung Designation	Sachnummer Stock No.	enthalten in contained in
C1	CC 100NF+-10% 50V5K1200 C CAPACITOR VITRAMON VJ1812Y104KFA	CC 082.3473	
C2	CC 100NF+-10% 50V5K1200 C CAPACITOR VITRAMON VJ1812Y104KFA	CC 082.3473	
C5	CC 100NF+-10% 50V5K1200 C CAPACITOR VITRAMON VJ1812Y104KFA	CC 082.3473	
C20	CC 100NF+-10% 50V5K1200 C CAPACITOR VITRAMON VJ1812Y104KFA	CC 082.3473	
C22	CC 10NF+-10%50V X7R 1206 CERAMIC CHIP CAPACITOR VITRAMON VJ1206Y103KFA	CC 099.8521	
C23	CC 0,5PF+-0,25PF50V NPO CERAMIC CHIP CAPACITOR ERIE GR42-6 0,5PF NPO50V	099.8650	
C25	CC 100NF+-10% 50V5K1200 C CAPACITOR VITRAMON VJ1812Y104KFA	CC 082.3473	
C26	CC 10NF+-10%50V X7R 1206 CERAMIC CHIP CAPACITOR VITRAMON VJ1206Y103KFA	CC 099.8521	
C27	CC 100NF+-10% 50V5K1200 C CAPACITOR VITRAMON VJ1812Y104KFA	CC 082.3473	
BIS/TO C30			
C31	CC 4,3PF+-0,25PF50V2NPO CAPACITOR VITRAMON VJ0805A4R3CFA	CC 093.5643	
C32	CC 3,3NF+-10%50V X7R 1206 CERAMIC CHIP CAPACITOR VITRAMON VJ1206Y332KFA	CC 099.8909	
C34	CC 100NF+-10% 50V5K1200 C CAPACITOR VITRAMON VJ1812Y104KFA	CC 082.3473	
C35	CC 330PF+-5%50V NPO 1206 CERAMIC CHIP CAPACITOR VITRAMON VJ1206A331JFA	CC 099.8873	
C40	CK 100NF+-5%63V5RM MKT CAPACITOR WIMA MKS/2/63/0,1UF/5%	CK 099.2930	
C41	CC 1,5NF+-10%4X5R2000 CAPACITOR VALVO 2222 63051 152	CC 087.7048	
C42	CK 100NF+-5%63V5RM MKT CAPACITOR WIMA MKS/2/63/0,1UF/5%	CK 099.2930	
C45	CC 100NF+-10% 50V5K1200 C CAPACITOR VITRAMON VJ1812Y104KFA	CC 082.3473	
C46	CC 10NF+-10%50V X7R 1206 CERAMIC CHIP CAPACITOR VITRAMON VJ1206Y103KFA	CC 099.8521	

uns alle Rechte vor

ROHDE&SCHWARZ	ÄZ	Datum Date	Schaltteilliste für Parts list for	Sachnummer Stock Nr.	Blatt Page
	07	1087	ED ANALOGTEIL	802.8435.01 SA	2

Kennzeichen Component No.	Benennung/Beschreibung Designation	Sachnummer Stock No.	enthalten in contained in
C47	CC 100NF+-10% 50V5K1200 C CAPACITOR VITRAMON VJ1812Y104KFA	CC 082.3473	
C48	CC 15PF+-5%50V NPO 1206 CERAMIC CHIP CAPACITOR VITRAMON VJ1206A150JFA	CC 099.8750	
C49	CC 5PF+-0,5PF50V NPO 1206 CERAMIC CHIP CAPACITOR VITRAMON VJ1206A5RODFA	CC 099.8696	
C51	CC 100NF+-10% 50V5K1200 C CAPACITOR VITRAMON VJ1812Y104KFA	CC 082.3473	
C52	CC 10NF+-10%50V X7R 1206 CERAMIC CHIP CAPACITOR VITRAMON VJ1206Y103KFA	CC 099.8521	
C53	CC 10NF+-10%50V X7R 1206 CERAMIC CHIP CAPACITOR VITRAMON VJ1206Y103KFA	CC 099.8521	
C55	CC 100NF+-10% 50V5K1200 C CAPACITOR VITRAMON VJ1812Y104KFA	CC 082.3473	
C56	CC 10NF+-10%50V X7R 1206 CERAMIC CHIP CAPACITOR VITRAMON VJ1206Y103KFA	CC 099.8521	
C57	CC 100NF+-10% 50V5K1200 C CAPACITOR VITRAMON VJ1812Y104KFA	CC 082.3473	
C65	CC 100NF+-10% 50V5K1200 C CAPACITOR VITRAMON VJ1812Y104KFA	CC 082.3473	
C66	CC 1NF+-10%50VX7R 1206 CERAMIC CHIP CAPACITOR VITRAMON VJ1206Y102KFA	CC 099.8438	
C67	CC 100NF+-10% 50V5K1200 C CAPACITOR VITRAMON VJ1812Y104KFA	CC 082.3473	
C68	CC 10NF+-10%50V X7R 1206 CERAMIC CHIP CAPACITOR VITRAMON VJ1206Y103KFA	CC 099.8521	
BIS/TO C71			
C72	CE 10UF+-20%16V RD3,5X5 ELECTROLYTIC CAPACITOR MATSUSHITA SRE 10UF+-20% 16V	803.0173	
C76	CC 1NF+-10%50VX7R 1206 CERAMIC CHIP CAPACITOR VITRAMON VJ1206Y102KFA	CC 099.8438	
C77	CC 10NF+-10%50V X7R 1206 CERAMIC CHIP CAPACITOR VITRAMON VJ1206Y103KFA	CC 099.8521	
C78	CC 10NF+-10%50V X7R 1206 CERAMIC CHIP CAPACITOR VITRAMON VJ1206Y103KFA	CC 099.8521	
C80	CK 1UF+-10%50V5RM MKT CAPACITOR WIMA MKS2/50/1UF/10%	CK 099.2998	

ROHDE&SCHWARZ	ÄZ	Datum Date	Schaltteiliste für Parts list for	Sachnummer Stock Nr.	Blatt Page
	07	1087	ED ANALOGTEIL	802.8435.01 SA	3

Kennzeichen Component No.	Benennung/Beschreibung Designation	Sachnummer Stock No.	enthalten in contained in
C81	CC 10NF+-10%50V X7R 1206 CERAMIC CHIP CAPACITOR VITRAMON VJ1206Y103KFA	CC 099.8521	
C82	CC 1NF+-10%63V K2000 CERAMIC CAPACITOR VALVO 2222 63051 102	CC 022.0784	
C83	CC 1NF+-10%50VX7R 1206 CERAMIC CHIP CAPACITOR VITRAMON VJ1206Y102KFA	CC 099.8438	
C85	CK 100NF+-5%63V5RM MKT CAPACITOR WIMA MKS/2/63/0,1UF/5%	CK 099.2930	
C95	CC 1NF+-10%63V K2000 CERAMIC CAPACITOR VALVO 2222 63051 102	CC 022.0784	
C96	CC 1NF+-10%63V K2000 CERAMIC CAPACITOR VALVO 2222 63051 102	CC 022.0784	
C97	CK 47NF+-5%63V5RM MKT CAPACITOR WIMA MKS2/63/0,047UF/5%	CK 099.2917	
C100	CC 100NF+-10% 50V5K1200 C CAPACITOR VITRAMON VJ1812Y104KFA	CC 082.3473	
C101	CC 100NF+-10% 50V5K1200 C CAPACITOR VITRAMON VJ1812Y104KFA	CC 082.3473	
C102	CC 100NF+-10% 50V5K1200 C CAPACITOR VITRAMON VJ1812Y104KFA	CC 082.3473	
C103	LD FILT.40DB/10GHZ10A300V LOWPASS-FILTER ERIE 9900-001-6020	911.0705	
C104	CC 10NF+-10%50V X7R 1206 CERAMIC CHIP CAPACITOR VITRAMON VJ1206Y103KFA	CC 099.8521	
C106	CC 27PF+-5%50V NPO 1206 CERAMIC CHIP CAPACITOR VITRAMON VJ1206A270JFA	CC 099.8409	
BIS/TO C109			
C110	CK 1UF+-10%50V5RM MKT CAPACITOR WIMA MKS2/50/1UF/10%	CK 099.2998	
C111	CC 27PF+-5%50V NPO 1206 CERAMIC CHIP CAPACITOR VITRAMON VJ1206A270JFA	CC 099.8409	
C112	CC 27PF+-5%50V NPO 1206 CERAMIC CHIP CAPACITOR VITRAMON VJ1206A270JFA	CC 099.8409	
C113	CC 10NF+-10%50V X7R 1206 CERAMIC CHIP CAPACITOR VITRAMON VJ1206Y103KFA	CC 099.8521	
BIS/TO C118			

uns Alle Rechte vor

ROHDE&SCHWARZ	ÄZ	Datum Date	Schaltteiliste für Parts list for	Sachnummer Stock Nr.	Blatt Page
	07	1087	ED ANALOGTEIL	802.8435.01 SA	4

Kennzeichen Component No.	Benennung/Beschreibung Designation	Sachnummer Stock No.	enthalten in contained in
C119	CC 330PF+-5%50V NPO 1206 CERAMIC CHIP CAPACITOR VITRAMON VJ1206A331JFA	CC 099.8873	
C120	CC 3,3NF+-10%50V X7R 1206 CERAMIC CHIP CAPACITOR VITRAMON VJ1206Y332KFA	CC 099.8909	
C121	CC 330PF+-5%50V NPO 1206 CERAMIC CHIP CAPACITOR VITRAMON VJ1206A331JFA	CC 099.8873	
C122	CC 330PF+-5%50V NPO 1206 CERAMIC CHIP CAPACITOR VITRAMON VJ1206A331JFA	CC 099.8873	
C123	CC 10NF+-10%50V X7R 1206 CERAMIC CHIP CAPACITOR VITRAMON VJ1206Y103KFA	CC 099.8521	
C124	CC 3,3NF+-10%50V X7R 1206 CERAMIC CHIP CAPACITOR VITRAMON VJ1206Y332KFA	CC 099.8909	
C126	CC 100NF+-10% 50V5K1200 C CAPACITOR VITRAMON VJ1812Y104KFA	CC 082.3473	
C129	CC 220PF+-5%50V NPO 1206 CERAMIC CHIP CAPACITOR VITRAMON VJ1206A221JFA	CC 099.8850	
C130	CC 100NF+-10% 50V5K1200 C CAPACITOR VITRAMON VJ1812Y104KFA	CC 082.3473	
C131	CC 330PF+-5%50V NPO 1206 CERAMIC CHIP CAPACITOR VITRAMON VJ1206A331JFA	CC 099.8873	
C132	CC 330PF+-5%50V NPO 1206 CERAMIC CHIP CAPACITOR VITRAMON VJ1206A331JFA	CC 099.8873	
C133	CC 100NF+-10%50V X7R 1206 CERAMIC CHIP CAPACITOR VITRAMON VJ1206Y104KFA	007.5237	
C135	LD FILT.40DB/10GHZ10A300V LOWPASS-FILTER ERIE 9900-001-6020	911.0705	
C136	LD FILT.40DB/10GHZ10A300V LOWPASS-FILTER ERIE 9900-001-6020	911.0705	
C137	LD FILT.40DB/10GHZ10A300V LOWPASS-FILTER ERIE 9900-001-6020	911.0705	
C138	LD FILT.40DB/10GHZ10A300V LOWPASS-FILTER ERIE 9900-001-6020	911.0705	
C141	CE 10UF+-20%35V RD5X5 ELECTROLYTIC CAPACITOR NATION PAN ECE-A1VKS-100	803.0667	
C144	CE 10UF+-20%35V RD5X5 ELECTROLYTIC CAPACITOR NATION PAN ECE-A1VKS-100	803.0667	
C147	CE 22UF+-20%16V5RDX5RAD.A ELECTROLYTIC CAPACITOR NCC SRE 22UF/16V+-20%	358.6062	

ROHDE&SCHWARZ	ÄZ	Datum Date	Schaltteilliste für Parts list for	Sachnummer Stock Nr.	Blatt Page
	07	1087	ED ANALOGTEIL	802.8435.01 SA	5

Kennzeichen Component No.	Benennung/Beschreibung Designation	Sachnummer Stock No.	enthalten in contained in
C150	CK 1,8NF+-1%63V6,3X11 KP PLASTIC-FOIL CAPACITOR SIEMENS B33531-A5182-F	CK 283.1699	
C151	CC 100PF+-5%50V NPO 1206 CERAMIC CHIP CAPACITOR VITRAMON VJ1206A101JFA	CC 099.8415	
C152	CK 7,5NF+-1,25%63V7,5QUAD CAPACITOR SIEMENS B33531-A5752-F	CK 213.4376	
C153	CC 56PF+-2%5X6NPO CAPACITOR VALVO 2222 678 10569	CC 087.6512	
C154	CK 6,8NF+-1%63V6,3QUX11KP CAPACITOR SIEMENS B33531-A5682-F	CK 099.1927	
C155	CC 56PF+-2%5X6NPO CAPACITOR VALVO 2222 678 10569	CC 087.6512	
C156	CC 1PF+-0,25PF3X4P100 CAPACITOR VALVO 2222 678 03108	CC 087.6170	
C157	CC 10NF+-10%50V X7R 1206 CERAMIC CHIP CAPACITOR VITRAMON VJ1206Y103KFA	CC 099.8521	
C158	CC 390PF+-5%50V NPO 1206 CERAMIC CHIP CAPACITOR VITRAMON VJ1206A391JFA	CC 099.8880	
C159	CC 10PF+-0,5PF50VNPO 1206 CERAMIC CHIP CAPACITOR VITRAMON VJ1206A100DFA	CC 099.8480	
C160	CE 10UF+-20%35V RD5X5 ELECTROLYTIC CAPACITOR NATION PAN ECE-A1VKS-100	803.0667	
C161	CC 10NF+-10%50V X7R 1206 CERAMIC CHIP CAPACITOR VITRAMON VJ1206Y103KFA	CC 099.8521	
C162	CC 10NF+-10%50V X7R 1206 CERAMIC CHIP CAPACITOR VITRAMON VJ1206Y103KFA	CC 099.8521	
C163	CC 10NF+-10%50V X7R 1206 CERAMIC CHIP CAPACITOR VITRAMON VJ1206Y103KFA	CC 099.8521	
C165	CE 10UF+-20%35V RD5X5 ELECTROLYTIC CAPACITOR NATION PAN ECE-A1VKS-100	803.0667	
C166	CC 100PF+-2%6X9NPO CAPACITOR VALVO 2222 678 10101	CC 087.6541	
C168	CC 100PF+-2%6X9NPO CAPACITOR VALVO 2222 678 10101	CC 087.6541	
C170	CC 390PF+-5%50V NPO 1206 CERAMIC CHIP CAPACITOR VITRAMON VJ1206A391JFA	CC 099.8880	
C171	CK 1UF+-10%50V5RM MKT CAPACITOR WIMA MKS2/50/1UF/10%	CK 099.2998	

ROHDE&SCHWARZ	ÄZ	Datum Date	Schaltteiliste für Parts list for	Sachnummer Stock Nr.	Blatt Page
	07	1087	ED ANALOGTEIL	802.8435.01 SA	6

Kennzeichen Component No.	Benennung/Beschreibung Designation	Sachnummer Stock No.	enthalten in contained in
C172	CK 1UF+-10%50V5RM MKT CAPACITOR WIMA MKS2/50/1UF/10%	CK 099.2998	
C175	CK 100NF+-5%63V5RM MKT CAPACITOR WIMA MKS/2/63/0,1UF/5%	CK 099.2930	
C176	CE 10UF+-20%35V RD5X5 ELECTROLYTIC CAPACITOR NATION PAN ECE-A1VKS-100	803.0667	
C177	CK 22NF+-5%63V5RM MKT CAPACITOR WIMA MKS2/63/0,022UF/5%	CK 099.2881	
C180	CC 10NF+-10%50V X7R 1206 CERAMIC CHIP CAPACITOR VITRAMON VJ1206Y103KFA	CC 099.8521	
C181	CC 10NF+-10%50V X7R 1206 CERAMIC CHIP CAPACITOR VITRAMON VJ1206Y103KFA	CC 099.8521	
C182	CK 100NF+-5%63V5RM MKT CAPACITOR WIMA MKS/2/63/0,1UF/5%	CK 099.2930	
C183	CE 10UF+-20%35V RD5X5 ELECTROLYTIC CAPACITOR NATION PAN ECE-A1VKS-100	803.0667	
C184	CE 10UF+-20%35V RD5X5 ELECTROLYTIC CAPACITOR NATION PAN ECE-A1VKS-100	803.0667	
C185	CK 100NF+-5%63V5RM MKT CAPACITOR WIMA MKS/2/63/0,1UF/5%	CK 099.2930	
C190	CC 10NF+-10%50V X7R 1206 CERAMIC CHIP CAPACITOR VITRAMON VJ1206Y103KFA	CC 099.8521	
C195	CE 2,2UF+-20%20V 5X 4X 7 ELECTROLYTIC CAPACITOR ROEDERSTEI ETR 1 2,2/20 20%	CE 022.8104	
C202	CE 10 UF+-20%16V 7X 4X 8 ELECTROLYTIC CAPACITOR ROEDERSTEI ETR 2 10/16 20%	CE 022.8085	
C205	CE 22UF+-20%16V5RDX5RAD.A ELECTROLYTIC CAPACITOR NCC SRE 22UF/16V+-20%	358.6062	
C206	CE 22UF+-20%16V5RDX5RAD.A ELECTROLYTIC CAPACITOR NCC SRE 22UF/16V+-20%	358.6062	
C210	CE 22UF+-20%16V5RDX5RAD.A ELECTROLYTIC CAPACITOR NCC SRE 22UF/16V+-20%	358.6062	
C211	CC 10NF+-10%50V X7R 1206 CERAMIC CHIP CAPACITOR VITRAMON VJ1206Y103KFA	CC 099.8521	
C212	CE 22UF+-20%16V5RDX5RAD.A ELECTROLYTIC CAPACITOR NCC SRE 22UF/16V+-20%	358.6062	
C213	CK 100NF+-5%63V5RM MKT CAPACITOR WIMA MKS/2/63/0,1UF/5%	CK 099.2930	

ROHDE&SCHWARZ	ÄZ 07	Datum Date 1087	Schaltteiliste für Parts list for ED ANALOGTEIL	Sachnummer Stock Nr. 802.8435.01 SA	Blatt Page 7

Kennzeichen Component No.	Benennung/Beschreibung Designation	Sachnummer Stock No.	enthalten in contained in
C215	CC 120PF+-2%6X9NPO CAPACITOR VALVO 2222 678 10121	CC 087.6558	
C216	CK 100NF+-5%63V5RM MKT CAPACITOR WIMA MKS/2/63/0,1UF/5%	CK 099.2930	
C217	CE 22UF+-20%16V5RDX5RAD.A ELECTROLYTIC CAPACITOR NCC SRE 22UF/16V+-20%	358.6062	
C220	CC 10NF+-10%50V X7R 1206 CERAMIC CHIP CAPACITOR VITRAMON VJ1206Y103KFA	CC 099.8521	
C221	CK 100NF+-5%63V5RM MKT CAPACITOR WIMA MKS/2/63/0,1UF/5%	CK 099.2930	
C223	CC 1NF+-10%63V K2000 CERAMIC CAPACITOR VALVO 2222 63051 102	CC 022.0784	
C225	CE 22UF+-20%16V5RDX5RAD.A ELECTROLYTIC CAPACITOR NCC SRE 22UF/16V+-20%	358.6062	
C226	CE 22UF+-20%16V5RDX5RAD.A ELECTROLYTIC CAPACITOR NCC SRE 22UF/16V+-20%	358.6062	
C230	CK 22NF+-1%63V8X8X11 KP CAPACITOR SIEMENS B33531-A5223-F	CK 213.4553	
C231	CK 560PF+-1%63V6,3X11 KP PLASTIC-FOIL CAPACITOR SIEMENS B33531-A5561-F	CK 283.1660	
C232	CC 10PF+-0,25PF3X4N750 CAPACITOR VALVO 2222 678 57109	CC 087.6787	
C233	CK 11NF+-1% 63V 7,5QUAD CAPACITOR SIEMENS B33531-A5113-F	CK 099.1679	
C234	CK 10NF+-1%63V7,5QUX13 KP CAPACITOR SIEMENS B33531-A5103-F	CK 340.9076	
C235	CK 27NF+-1% 63V 10QUAD CAPACITOR SIEMENS B33531-A5273-F	CK 099.1685	
C237	CK 100NF+-5%63V5RM MKT CAPACITOR WIMA MKS/2/63/0,1UF/5%	CK 099.2930	
C238	CK 100NF+-5%63V5RM MKT CAPACITOR WIMA MKS/2/63/0,1UF/5%	CK 099.2930	
C240	CC 10NF+-10%50V X7R 1206 CERAMIC CHIP CAPACITOR VITRAMON VJ1206Y103KFA	CC 099.8521	
C241	CK 10NF+-5%63V5RM MKT CAPACITOR WIMA FKS 2/100/0,01UF/5%	CK 099.2869	
C250	CE 10UF+-20%35V RD5X5 ELECTROLYTIC CAPACITOR NATION PAN ECE-A1VKS-100	803.0667	

· uns alle Rechte vor

Kennzeichen Component No.	Benennung/Beschreibung Designation	Sachnummer Stock No.	enthalten in contained in
C251	CC 10NF+-10%50V X7R 1206 CERAMIC CHIP CAPACITOR VITRAMON VJ1206Y103KFA	CC 099.8521	
C253	CC 10NF+-10%50V X7R 1206 CERAMIC CHIP CAPACITOR VITRAMON VJ1206Y103KFA	CC 099.8521	
C254	CC 6,8PF+-0,25PF4X5P100 CAPACITOR VALVO 2222 678 03688	CC 087.6270	
C255	CC 10NF+-10%50V X7R 1206 CERAMIC CHIP CAPACITOR VITRAMON VJ1206Y103KFA	CC 099.8521	
C256	CE 10UF+-20%35V RD5X5 ELECTROLYTIC CAPACITOR NATION PAN ECE-A1VKS-100	803.0667	
C261	CC 1NF+-10%63V K2000 CERAMIC CAPACITOR VALVO 2222 63051 102	CC 022.0784	
C262	CC 1NF+-10%63V K2000 CERAMIC CAPACITOR VALVO 2222 63051 102	CC 022.0784	
C273	CC 3,9PF/O,25PF63V3X5N150 CAPACITOR VALVO 2222 678 33398	CC 099.5545	
C274	CC 10NF+-10%50V X7R 1206 CERAMIC CHIP CAPACITOR VITRAMON VJ1206Y103KFA	CC 099.8521	
C275	CC 10NF+-10%50V X7R 1206 CERAMIC CHIP CAPACITOR VITRAMON VJ1206Y103KFA	CC 099.8521	
C282	CE 10UF+-20%35V RD5X5 ELECTROLYTIC CAPACITOR NATION PAN ECE-A1VKS-100	803.0667	
C283	CE 10UF+-20%35V RD5X5 ELECTROLYTIC CAPACITOR NATION PAN ECE-A1VKS-100	803.0667	
C284	CC 10NF+-10%50V X7R 1206 CERAMIC CHIP CAPACITOR VITRAMON VJ1206Y103KFA	CC 099.8521	
C285	CE 22UF+-20%16V5RDX5RAD.A ELECTROLYTIC CAPACITOR NCC SRE 22UF/16V+-20%	358.6062	
C300	CK 220PF+-2,5%63V RM5 KP POLYPROPYLENE CAPACITOR WIMA FKP2 220/2,5%/63V	CK 099.6087	
C302	CC 10NF+-10%50V X7R 1206 CERAMIC CHIP CAPACITOR VITRAMON VJ1206Y103KFA	CC 099.8521	
C303	CC 10NF+-10%50V X7R 1206 CERAMIC CHIP CAPACITOR VITRAMON VJ1206Y103KFA	CC 099.8521	
C305	CK 680PF+-2,5%63V RM5 KP POLYPROPYLENE CAPACITOR WIMA FKP2 680/2,5%/63V	CK 099.6112	
C306	CK 470PF+-2,5%63V RM5 KP POLYPROPYLENE CAPACITOR WIMA FKP2 470/2,5%/63V	CK 099.6106	

ROHDE&SCHWARZ	ÄZ 07	Datum Date 1087	Schaltteiliste für Parts list for ED ANALOGTEIL	Sachnummer Stock Nr. 802.8435.01 SA	Blatt Page 9

Kennzeichen Component No.	Benennung/Beschreibung Designation	Sachnummer Stock No.	enthalten in contained in
C310	CK 2,2NF+-2,5%63V RM5 KP POLYPROPYLENE CAPACITOR WIMA FKP2 2200/2,5%/63V	CK 099.6141	
C311	CK 470PF+-2,5%63V RM5 KP POLYPROPYLENE CAPACITOR WIMA FKP2 470/2,5%/63V	CK 099.6106	
C312	CE 10UF+-20%35V RD5X5 ELECTROLYTIC CAPACITOR NATION PAN ECE-A1VKS-100	803.0667	
C313	CE 10UF+-20%35V RD5X5 ELECTROLYTIC CAPACITOR NATION PAN ECE-A1VKS-100	803.0667	
C315	CC 27PF+-2%4X5NPO CAPACITOR VALVO 2222 678 10279	CC 087.6470	
C340	CC 27PF+-2%4X5NPO CAPACITOR VALVO 2222 678 10279	CC 087.6470	
C350	CK 1UF+-10%50V5RM MKT CAPACITOR WIMA MKS2/50/1UF/10%	CK 099.2998	
C351	CK 100NF+-5%63V5RM MKT CAPACITOR WIMA MKS/2/63/0,1UF/5%	CK 099.2930	
C352	CE 10UF+-20%35V RD5X5 ELECTROLYTIC CAPACITOR NATION PAN ECE-A1VKS-100	803.0667	
C353	CC 10NF+-10%50V X7R 1206 CERAMIC CHIP CAPACITOR VITRAMON VJ1206Y103KFA	CC 099.8521	
C354	CC 10NF+-10%50V X7R 1206 CERAMIC CHIP CAPACITOR VITRAMON VJ1206Y103KFA	CC 099.8521	
C355	CK 6,8NF+-2,5%63V RM5 KP POLYPROPYLENE CAPACITOR WIMA FKP2 6800/2,5%/63V	CK 099.6170	
C356	CK 6,8NF+-2,5%63V RM5 KP POLYPROPYLENE CAPACITOR WIMA FKP2 6800/2,5%/63V	CK 099.6170	
C357	CK 100NF+-5%63V5RM MKT CAPACITOR WIMA MKS/2/63/0,1UF/5%	CK 099.2930	
C358	CE 10UF+-20%35V RD5X5 ELECTROLYTIC CAPACITOR NATION PAN ECE-A1VKS-100	803.0667	
C359	CK 100NF+-5%63V5RM MKT CAPACITOR WIMA MKS/2/63/0,1UF/5%	CK 099.2930	
C360	CK 6,8NF+-2,5%63V RM5 KP POLYPROPYLENE CAPACITOR WIMA FKP2 6800/2,5%/63V	CK 099.6170	
C361	CK 6,8NF+-2,5%63V RM5 KP POLYPROPYLENE CAPACITOR WIMA FKP2 6800/2,5%/63V	CK 099.6170	
C365	CK 68NF+-1%63V12X12X12 PP CAPACITOR SIEMENS B33531-A5683-F	CK 303.7067	

Kennzeichen Component No.	Benennung/Beschreibung Designation	Sachnummer Stock No.	enthalten in contained in
C366	CK 68NF+-1%63V12X12X12 PP CAPACITOR SIEMENS B33531-A5683-F	CK 303.7067	
C370	CK 68NF+-1%63V12X12X12 PP CAPACITOR SIEMENS B33531-A5683-F	CK 303.7067	
C371	CK 68NF+-1%63V12X12X12 PP CAPACITOR SIEMENS B33531-A5683-F	CK 303.7067	
C372	CK 100NF+-5%63V5RM MKT CAPACITOR WIMA MKS/2/63/0,1UF/5%	CK 099.2930	
C373	CK 100NF+-5%63V5RM MKT CAPACITOR WIMA MKS/2/63/0,1UF/5%	CK 099.2930	
C380	CK 20NF+-1%63V6,3QUX11 KP CAPACITOR SIEMENS B33531-A5203-F	CK 334.5550	
C381	CK 20NF+-1%63V6,3QUX11 KP CAPACITOR SIEMENS B33531-A5203-F	CK 334.5550	
C382	CK 20NF+-1%63V6,3QUX11 KP CAPACITOR SIEMENS B33531-A5203-F	CK 334.5550	
C383	CC 10NF+-10%50V X7R 1206 CERAMIC CHIP CAPACITOR VITRAMON VJ1206Y103KFA	CC 099.8521	
C384	CC 10NF+-10%50V X7R 1206 CERAMIC CHIP CAPACITOR VITRAMON VJ1206Y103KFA	CC 099.8521	
C385	CK 3,9NF+-1%63V6,3QUX11KP CAPACITOR SIEMENS B33531-A5392-F	CK 340.8057	
C386	CC 100PF+-2%6X9NPO CAPACITOR VALVO 2222 678 10101	CC 087.6541	
C387	CK 6,8NF+-1%63V6,3QUX11KP CAPACITOR SIEMENS B33531-A5682-F	CK 099.1927	
C391	CC 56PF+-2%5X6NPO CAPACITOR VALVO 2222 678 10569	CC 087.6512	
C392	CK 1NF+-1,25%63V7,5QUAD. CAPACITOR SIEMENS B33531-A5102-F	CK 213.4353	
C393	CK 10NF+-1%63V7,5QUX13 KP CAPACITOR SIEMENS B33531-A5103-F	CK 340.9076	
C400	CK 100NF+-1%63V 11RDX22 CAPACITOR ROEDERST CK1853-410/06/1%	CK 024.6438	
C402	CK 560PF+-1%63V6,3X11 KP PLASTIC-FOIL CAPACITOR SIEMENS B33531-A5561-F	CK 283.1660	
C403	CK 47NF+-1%63V7,5QUX13 KP CAPACITOR SIEMENS B33531-A5473-F	CK 099.1904	

Kennzeichen Component No.	Benennung/Beschreibung Designation	Sachnummer Stock No.	enthalten in contained in
C404	CK 47NF+-1%63V7,5QUX13 KP CAPACITOR SIEMENS B33531-A5473-F	CK 099.1904	
C405	CK 20NF+-1%63V6,3QUX11 KP CAPACITOR SIEMENS B33531-A5203-F	CK 334.5550	
C406	CK 100NF+-5%63V5RM MKT CAPACITOR WIMA MKS/2/63/0,1UF/5%	CK 099.2930	
C407	CK 100NF+-5%63V5RM MKT CAPACITOR WIMA MKS/2/63/0,1UF/5%	CK 099.2930	
C408	CE 10UF+-20%35V RD5X5 ELECTROLYTIC CAPACITOR NATION PAN ECE-A1VKS-100	803.0667	
C409	CE 10UF+-20%35V RD5X5 ELECTROLYTIC CAPACITOR NATION PAN ECE-A1VKS-100	803.0667	
C410	CC 10NF+-10%50V X7R 1206 CERAMIC CHIP CAPACITOR VITRAMON VJ1206Y103KFA	CC 099.8521	
C411	CC 10NF+-10%50V X7R 1206 CERAMIC CHIP CAPACITOR VITRAMON VJ1206Y103KFA	CC 099.8521	
C415	CE 10UF+-20%35V RD5X5 ELECTROLYTIC CAPACITOR NATION PAN ECE-A1VKS-100	803.0667	
C416	CC 10NF+-10%50V X7R 1206 CERAMIC CHIP CAPACITOR VITRAMON VJ1206Y103KFA	CC 099.8521	
C418	CE 22UF+-20%16V5RDX5RAD.A ELECTROLYTIC CAPACITOR NCC SRE 22UF/16V+-20%	358.6062	
C419	CC 10NF+-10%50V X7R 1206 CERAMIC CHIP CAPACITOR VITRAMON VJ1206Y103KFA	CC 099.8521	
C420	CE 10UF+-20%35V RD5X5 ELECTROLYTIC CAPACITOR NATION PAN ECE-A1VKS-100	803.0667	
C425	CK 100NF+-5%63V5RM MKT CAPACITOR WIMA MKS/2/63/0,1UF/5%	CK 099.2930	
C426	CK 100NF+-5%63V5RM MKT CAPACITOR WIMA MKS/2/63/0,1UF/5%	CK 099.2930	
C427	CC 10NF+-10%50V X7R 1206 CERAMIC CHIP CAPACITOR VITRAMON VJ1206Y103KFA	CC 099.8521	
C428	CC 10NF+-10%50V X7R 1206 CERAMIC CHIP CAPACITOR VITRAMON VJ1206Y103KFA	CC 099.8521	
C429	CC 10NF+-10%50V X7R 1206 CERAMIC CHIP CAPACITOR VITRAMON VJ1206Y103KFA	CC 099.8521	
C430	CK 1UF+-10%50V5RM MKT CAPACITOR WIMA MKS2/50/1UF/10%	CK 099.2998	

uns alle Rechte vor

Kennzeichen Component No.	Benennung/Beschreibung Designation	Sachnummer Stock No.	enthalten in contained in
C435	CE 10UF+-20%35V RD5X5 ELECTROLYTIC CAPACITOR NATION PAN ECE-A1VKS-100	803.0667	
C436	CC 10NF+-10%50V X7R 1206 CERAMIC CHIP CAPACITOR VITRAMON VJ1206Y103KFA	CC 099.8521	
C438	CE 22UF+-20%16V5RDX5RAD.A ELECTROLYTIC CAPACITOR NCC SRE 22UF/16V+-20%	358.6062	
C439	CC 10NF+-10%50V X7R 1206 CERAMIC CHIP CAPACITOR VITRAMON VJ1206Y103KFA	CC 099.8521	
C440	CE 10UF+-20%35V RD5X5 ELECTROLYTIC CAPACITOR NATION PAN ECE-A1VKS-100	803.0667	
C445	CK 1UF+-10%50V5RM MKT CAPACITOR WIMA MKS2/50/1UF/10%	CK 099.2998	
C446	CK 1UF+-10%50V5RM MKT CAPACITOR WIMA MKS2/50/1UF/10%	CK 099.2998	
C448	CC 10NF+-10%50V X7R 1206 CERAMIC CHIP CAPACITOR VITRAMON VJ1206Y103KFA	CC 099.8521	
C449	CC 10NF+-10%50V X7R 1206 CERAMIC CHIP CAPACITOR VITRAMON VJ1206Y103KFA	CC 099.8521	
C451	CC 1NF+-10%63V K2000 CERAMIC CAPACITOR VALVO 2222 63051 102	CC 022.0784	
C452	CC 10NF+-10%50V X7R 1206 CERAMIC CHIP CAPACITOR VITRAMON VJ1206Y103KFA	CC 099.8521	
C455	CK 100NF+-5%63V5RM MKT CAPACITOR WIMA MKS/2/63/0,1UF/5%	CK 099.2930	
C456	CK 100NF+-5%63V5RM MKT CAPACITOR WIMA MKS/2/63/0,1UF/5%	CK 099.2930	
C457	CC 10NF+-10%50V X7R 1206 CERAMIC CHIP CAPACITOR VITRAMON VJ1206Y103KFA	CC 099.8521	
C458	CC 10NF+-10%50V X7R 1206 CERAMIC CHIP CAPACITOR VITRAMON VJ1206Y103KFA	CC 099.8521	
C465	CC 10NF+-10%50V X7R 1206 CERAMIC CHIP CAPACITOR VITRAMON VJ1206Y103KFA	CC 099.8521	
C470	CE 22UF+-20%16V5RDX5RAD.A ELECTROLYTIC CAPACITOR NCC SRE 22UF/16V+-20%	358.6062	
C475	CE 22UF+-20%16V5RDX5RAD.A ELECTROLYTIC CAPACITOR NCC SRE 22UF/16V+-20%	358.6062	
C480	CE 100UF+-20%25V RD8X9,5 ELECTROLYTIC CAPACITOR MATSUSHITA ECE-A1ESS-101	803.0580	

ROHDE&SCHWARZ	ÄZ 07	Datum Date 1087	Schaltteilliste für Parts list for ED ANALOGTEIL	Sachnummer Stock Nr. 802.8435.01 SA	Blatt Page 13

Kennzeichen Component No.	Benennung/Beschreibung Designation	Sachnummer Stock No.	enthalten in contained in
C485	CE 100UF+-20%25V RD8X9,5 ELECTROLYTIC CAPACITOR MATSUSHITA ECE-A1ESS-101	803.0580	
C500	CK 1UF+-10%50V5RM MKT CAPACITOR WIMA MKS2/50/1UF/10%	CK 099.2998	
C501	CC 22PF+-2%3X4N750 CAPACITOR VALVO 2222 678 58229	CC 087.6829	
C502	CC 4,7PF+-0,25PF3X4NPO CAPACITOR VALVO 2222 678 09478	CC 087.6387	
C511	CC 10NF+-10%50V X7R 1206 CERAMIC CHIP CAPACITOR VITRAMON VJ1206Y103KFA	CC 099.8521	
C512	CC 3,3PF+-0,25PF3X4NPO CAPACITOR VALVO 2222 678 09338	CC 087.6364	
C513	CC 10NF+-10%50V X7R 1206 CERAMIC CHIP CAPACITOR VITRAMON VJ1206Y103KFA	CC 099.8521	
C521	CE 22UF+-20%16V5RDX5RAD.A ELECTROLYTIC CAPACITOR NCC SRE 22UF/16V+-20%	358.6062	
C522	CC 10NF+-10%50V X7R 1206 CERAMIC CHIP CAPACITOR VITRAMON VJ1206Y103KFA	CC 099.8521	
C523	CE 10UF+-20%35V RD5X5 ELECTROLYTIC CAPACITOR NATION PAN ECE-A1VKS-100	803.0667	
C530	CC 10NF+-10%50V X7R 1206 CERAMIC CHIP CAPACITOR VITRAMON VJ1206Y103KFA	CC 099.8521	
C531	CE 10UF+-20%35V RD5X5 ELECTROLYTIC CAPACITOR NATION PAN ECE-A1VKS-100	803.0667	
C533	CK 1UF+-10%50V5RM MKT CAPACITOR WIMA MKS2/50/1UF/10%	CK 099.2998	
C540	CE 22UF+-20%16V5RDX5RAD.A ELECTROLYTIC CAPACITOR NCC SRE 22UF/16V+-20%	358.6062	
C545	CE 22UF+-20%16V5RDX5RAD.A ELECTROLYTIC CAPACITOR NCC SRE 22UF/16V+-20%	358.6062	
C550	CK 1UF+-10%50V5RM MKT CAPACITOR WIMA MKS2/50/1UF/10%	CK 099.2998	
C552	CC 10NF+-10%50V X7R 1206 CERAMIC CHIP CAPACITOR VITRAMON VJ1206Y103KFA	CC 099.8521	
C553	CC 10NF+-10%50V X7R 1206 CERAMIC CHIP CAPACITOR VITRAMON VJ1206Y103KFA	CC 099.8521	
C555	CC 5,6NF+- 5%100V NPO VIE CAPACITOR ERIE 8737-100-COG-5,6NF-J	CC 060.0988	

Kennzeichen Component No.	Benennung/Beschreibung Designation	Sachnummer Stock No.	enthalten in contained in
C557	CC 5,6NF+- 5%100V NPO VIE CAPACITOR ERIE 8737-100-COG-5,6NF-J	CC 060.0988	
C565	CC 5,6NF+- 5%100V NPO VIE CAPACITOR ERIE 8737-100-COG-5,6NF-J	CC 060.0988	
C568	CC 5,6NF+- 5%100V NPO VIE CAPACITOR ERIE 8737-100-COG-5,6NF-J	CC 060.0988	
C570	CC 5,6NF+- 5%100V NPO VIE CAPACITOR ERIE 8737-100-COG-5,6NF-J	CC 060.0988	
C573	CC 5,6NF+- 5%100V NPO VIE CAPACITOR ERIE 8737-100-COG-5,6NF-J	CC 060.0988	
C580	CC 10NF+-10%50V X7R 1206 CERAMIC CHIP CAPACITOR VITRAMON VJ1206Y103KFA	CC 099.8521	
C581	CC 10NF+-10%50V X7R 1206 CERAMIC CHIP CAPACITOR VITRAMON VJ1206Y103KFA	CC 099.8521	
C582	CE 22UF+-20%16V5RDX5RAD.A ELECTROLYTIC CAPACITOR NCC SRE 22UF/16V+-20%	358.6062	
C601	CK 100NF+-5%63V5RM MKT CAPACITOR WIMA MKS/2/63/0,1UF/5%	CK 099.2930	
C603	CC 100NF+-10%50V5K1200VIE CAPACITOR UNION CARB CK05BX104K	CC 084.5350	
C635	CK 100NF+-5%63V5RM MKT CAPACITOR WIMA MKS/2/63/0,1UF/5%	CK 099.2930	
C636	CK 100NF+-5%63V5RM MKT CAPACITOR WIMA MKS/2/63/0,1UF/5%	CK 099.2930	
C637	CK 4,7NF+-2,5%63V RM5 KP POLYPROPYLENE CAPACITOR WIMA FKP2 4700/2,5%/63V	CK 099.6164	
C638	CC 10NF+-10%50V X7R 1206 CERAMIC CHIP CAPACITOR VITRAMON VJ1206Y103KFA	CC 099.8521	
C645	CK 100NF+-5%63V5RM MKT CAPACITOR WIMA MKS/2/63/0,1UF/5%	CK 099.2930	
C646	CK 100NF+-5%63V5RM MKT CAPACITOR WIMA MKS/2/63/0,1UF/5%	CK 099.2930	
C647	CK 220NF+-5%63V5RM MKT CAPACITOR WIMA MKS2/63/0,22UF/5%	CK 099.2952	
C648	CK 470NF+-5%63V5RM MKT CAPACITOR WIMA MKS2/63/0,47UF/5%	CK 099.2975	
C650	CK 680NF+-10%50VRM MKT CAPACITOR WIMA MKS2/50/0,68UF/10%	CK 099.2981	

Kennzeichen Component No.	Benennung/Beschreibung Designation	Sachnummer Stock No.	enthalten in contained in
C651	CK 470NF+-5%63V5RM MKT CAPACITOR WIMA MKS2/63/0,47UF/5%	CK 099.2975	
C653	CK 100NF+-5%63V5RM MKT CAPACITOR WIMA MKS/2/63/0,1UF/5%	CK 099.2930	
C654	CK 100NF+-5%63V5RM MKT CAPACITOR WIMA MKS/2/63/0,1UF/5%	CK 099.2930	
C655	CK 330NF+-5%63V5RM MKT CAPACITOR WIMA MKS2/63/0,33UF/5%	CK 099.2969	
C656	CK 1UF+-10%50V5RM MKT CAPACITOR WIMA MKS2/50/1UF/10%	CK 099.2998	
C660	CE 2,2UF+-20%35V 7X 5X11 ELECTROLYTIC CAPACITOR ROEDERSTEI ETR 3 2,2/40 20%	CE 022.8191	
C661	CK 100NF+-5%63V5RM MKT CAPACITOR WIMA MKS/2/63/0,1UF/5%	CK 099.2930	
C662	CK 100NF+-5%63V5RM MKT CAPACITOR WIMA MKS/2/63/0,1UF/5%	CK 099.2930	
C663	CE 10 UF+-20%16V 7X 4X 8 ELECTROLYTIC CAPACITOR ROEDERSTEI ETR 2 10/16 20%	CE 022.8085	
C664	CE 10UF -10+50% 63V 9X13 ELECTROLYTIC CAPACITOR ROEDERST ELKOEK10/63	CE 022.7650	
C670	CE 4,7UF+-20%20V 7X 4X 8 ELECTROLYTIC CAPACITOR ROEDERSTEI ETR 2 4,7/20 20%	CE 022.8110	
C671	CK 100NF+-5%63V5RM MKT CAPACITOR WIMA MKS/2/63/0,1UF/5%	CK 099.2930	
C672	CK 100NF+-5%63V5RM MKT CAPACITOR WIMA MKS/2/63/0,1UF/5%	CK 099.2930	
C675	CK 100NF+-5%63V5RM MKT CAPACITOR WIMA MKS/2/63/0,1UF/5%	CK 099.2930	
C676	CK 100NF+-5%63V5RM MKT CAPACITOR WIMA MKS/2/63/0,1UF/5%	CK 099.2930	
C680	CK 100NF+-5%63V5RM MKT CAPACITOR WIMA MKS/2/63/0,1UF/5%	CK 099.2930	
C685	CK 100NF+-5%63V5RM MKT CAPACITOR WIMA MKS/2/63/0,1UF/5%	CK 099.2930	
C686	CK 100NF+-5%63V5RM MKT CAPACITOR WIMA MKS/2/63/0,1UF/5%	CK 099.2930	
C687	CK 100NF+-5%63V5RM MKT CAPACITOR WIMA MKS/2/63/0,1UF/5%	CK 099.2930	

uns alle Rechte vor

Kennzeichen Component No.	Benennung/Beschreibung Designation	Sachnummer Stock No.	enthalten in contained in
C700	CE 470UF+-20%25V12,5X12,5 ELECTROLYTIC CAPACITOR MATSUSHITA ECE-A1ESS-471U	803.0715	
C701	CE 470UF+-20%25V12,5X12,5 ELECTROLYTIC CAPACITOR MATSUSHITA ECE-A1ESS-471U	803.0715	
C703	CE 22UF+-20%16V5RDX5RAD.A ELECTROLYTIC CAPACITOR NCC SRE 22UF/16V+-20%	358.6062	
C704	CC 10NF-20+50%7X8R4000 CAPACITOR VALVO 2222 63051 64051103	CC 087.7525	
C705	CC 10NF-20+50%7X8R4000 CAPACITOR VALVO 2222 63051 64051103	CC 087.7525	
C706	CC 10NF-20+50%7X8R4000 CAPACITOR VALVO 2222 63051 64051103	CC 087.7525	
D76	BL CD4053BE 3X2CH. MUX MULTIPLEXER RCA CD4053BE	BL 565.3080	
D96	BL CD4047AE MULTIVIBR. MULTIVIBRATOR RCA CD4047AE	BL 086.7221	
D97	BL HEF4094BT 8B.SHIFTREG 8 STAGE BUS REGISTER VALVO HEF4094BT, GEGURTET	803.0867	
D100	BL SN74S74N 2XD-FLIPFL. FLIP-FLOP TEXAS SN74S74N	266.6621	
D101	BL 74F161PC 4B.BIN.CNT 4BIT SYNC.PRES.BIN.COUNT. VALVO N74F161N	BL 344.7103	
D102	BL 74F161PC 4B.BIN.CNT 4BIT SYNC.PRES.BIN.COUNT. VALVO N74F161N	BL 344.7103	
D103	BL SN74LS153N DATENSELEKT IC MULTIPLEXER SN74LS153N TEXAS SN74LS153N	266.4729	
D104	BL HEF4094BT 8B.SHIFTREG 8 STAGE BUS REGISTER VALVO HEF4094BT, GEGURTET	803.0867	
D105	BL HEF4094BT 8B.SHIFTREG 8 STAGE BUS REGISTER VALVO HEF4094BT, GEGURTET	803.0867	
D106	BL CD4040BE 12B.COUNTER COUNTER RCA CD4040BE	BL 086.7180	
D110	BJ TL601CP 2X ANALOGSCH ANALOG SWITCH TEXAS TL601CP {MJG}	BJ 213.4530	
D220	BJ N8T20F 1XLINE REC LINE RECEIVER SIGNETICS N8T20F	BJ 289.4502	

ROHDE&SCHWARZ	ÄZ 07	Datum Date 1087	Schaltteilliste für Parts list for ED ANALOGTEIL	Sachnummer Stock Nr. 802.8435.01 SA	Blatt Page 17

Kennzeichen Component No.	Benennung/Beschreibung Designation	Sachnummer Stock No.	enthalten in contained in
D225	BL HEF4011BT 4X2IN.NANDG NAND GATE VALVO HEF4011BT	350.4154	
D280	BL CD4052BE 2X4CHAN.MUX MULTIPLEXER/DEMULTIPLEXER MOTOROLA MC14052BCP	BL 243.1200	
D282	BJ TL601CP 2X ANALOGSCH ANALOG SWITCH TEXAS TL601CP {MJG}	BJ 213.4530	
D315	BJ TL601CP 2X ANALOGSCH ANALOG SWITCH TEXAS TL601CP {MJG}	BJ 213.4530	
D320	BL HEF4094BT 8B.SHIFTREG 8 STAGE BUS REGISTER VALVO HEF4094BT, GEGURTET	803.0867	
D352	BL CD4053BE 3X2CH. MUX MULTIPLEXER RCA CD4053BE	BL 565.3080	
D410	BL CD4052BE 2X4CHAN.MUX MULTIPLEXER/DEMULTIPLEXER MOTOROLA MC14052BCP	BL 243.1200	
D415	BL CD4053BE 3X2CH. MUX MULTIPLEXER RCA CD4053BE	BL 565.3080	
D430	BL CD4053BE 3X2CH. MUX MULTIPLEXER RCA CD4053BE	BL 565.3080	
D435	BJ TL601CP 2X ANALOGSCH ANALOG SWITCH TEXAS TL601CP {MJG}	BJ 213.4530	
D445	BL CD4053BE 3X2CH. MUX MULTIPLEXER RCA CD4053BE	BL 565.3080	
D450	BL CD4053BE 3X2CH. MUX MULTIPLEXER RCA CD4053BE	BL 565.3080	
D455	BL CD4053BE 3X2CH. MUX MULTIPLEXER RCA CD4053BE	BL 565.3080	
D465	BL CD4094BF 8BIT SH.REG SHIFT REGISTER RCA CD4094BF	BL 418.0064	
D466	BL CD4094BF 8BIT SH.REG SHIFT REGISTER RCA CD4094BF	BL 418.0064	
D467	BL CD4094BF 8BIT SH.REG SHIFT REGISTER RCA CD4094BF	BL 418.0064	
D470	BL CD4053BE 3X2CH. MUX MULTIPLEXER RCA CD4053BE	BL 565.3080	
D650	BL MC14066BAL 4X ANALOGSW ANALOG SWITCH MOTOROLA MC14066BAL	BL 418.0135	
D675	BL CD4052BE 2X4CHAN.MUX MULTIPLEXER/DEMULTIPLEXER MOTOROLA MC14052BCP	BL 243.1200	

uns alle Rechte vor

Kennzeichen Component No.	Benennung/Beschreibung Designation	Sachnummer Stock No.	enthalten in contained in
D680	BL CD4051BE 8CH. MUX MULTIPLEXER RCA CD4051BE	BL 339.4174	
D685	BL CD4051BE 8CH. MUX MULTIPLEXER RCA CD4051BE	BL 339.4174	
D695	BL SN74LS05N 6/INVERT. OC IC INVERTER SN74LS05N TEXAS SN74LS05N	266.7911	
D696	BL SN74LS05N 6/INVERT. OC IC INVERTER SN74LS05N TEXAS SN74LS05N	266.7911	
D697	BL HEF4094BT 8B.SHIFTREG 8 STAGE BUS REGISTER VALVO HEF4094BT, GEGURTET	803.0867	
D698	BL HEF4094BT 8B.SHIFTREG 8 STAGE BUS REGISTER VALVO HEF4094BT, GEGURTET	803.0867	
E160	ER 455KHZ-BANDP.KER.B:30K 455KHZ-BANDPASS,CER.BW30K MURATA CFW 455 B	803.0809	
H600	EF 6V 0,02A OHNE SOCKEL LAMP 6V BUERKLIN 33 G112	EF 803.0815	
K5	SN HF-RELAIS 12V 1XUM RELAY SDS RF1E-12V	803.0821	
K166	SR 5 V 1XU DIL RELAY ELECTROL RA 30421051	SR 340.4551	
K168	SR 5 V 1XU DIL RELAY ELECTROL RA 30421051	SR 340.4551	
K350	SR 5V360OHM1MAL1RH-JC-GEH RELAY CLARE PRME 15.005	SR 412.0027	
L1	LD 680 UH10%60,0OHM0,030A CHOKE DELEVAN DROSSEL1025-88	LD 067.3201	
L2	LD 680 UH10%60,0OHM0,030A CHOKE DELEVAN DROSSEL1025-88	LD 067.3201	
L20	LD 390 UH10%35,0OHM0,040A CHOKE DELEVAN DROSSEL1025-82	LD 067.3176	
L21	LD 390 UH10%35,0OHM0,040A CHOKE DELEVAN DROSSEL1025-82	LD 067.3176	
L25	LD 390 UH10%35,0OHM0,040A CHOKE DELEVAN DROSSEL1025-82	LD 067.3176	

Kennzeichen Component No.	Benennung/Beschreibung Designation	Sachnummer Stock No.	enthalten in contained in
L26	LD 470 UH10%42,0OHM0,036A CHOKE DELEVAN DROSSEL1025-84	LD 067.3182	
L27	LD 1000UH10%72,0OHM0,028A CHOKE DELEVAN DROSSEL1025-92	LD 037.8005	
L30	LD 390 UH10%35,0OHM0,040A CHOKE DELEVAN DROSSEL1025-82	LD 067.3176	
L33	LD 270 UH10%25,0OHM0,047A CHOKE DELEVAN DROSSEL1025-78	LD 067.3153	
L46	LD 470 UH10%42,0OHM0,036A CHOKE DELEVAN DROSSEL1025-84	LD 067.3182	
L50	LD 390 UH10%35,0OHM0,040A CHOKE DELEVAN DROSSEL1025-82	LD 067.3176	
L55	LD 390 UH10%35,0OHM0,040A CHOKE DELEVAN DROSSEL1025-82	LD 067.3176	
L100	LD 470 UH10%42,0OHM0,036A CHOKE DELEVAN DROSSEL1025-84	LD 067.3182	
L123	LD 100 UH10%8,00OHM0,084A CHOKE DELEVAN DROSSEL1025-68	LD 067.3101	
L130	LD 1000UH10%72,0OHM0,028A CHOKE DELEVAN DROSSEL1025-92	LD 037.8005	
L149	LD 1,00UH10%1,00OHM0,390A CHOKE DELEVAN 1025-20	LD 067.2863	
L150	LD 18UH+-2% 0,36A1,95 OHM MINI CHOKE JAHRE 74.11-18ROG	LD 283.1001	
L151	LD 18UH+-2% 0,36A1,95 OHM MINI CHOKE JAHRE 74.11-18ROG	LD 283.1001	
L180	LD 100 UH10%8,00OHM0,084A CHOKE DELEVAN DROSSEL1025-68	LD 067.3101	
L185	LD 100 UH10%8,00OHM0,084A CHOKE DELEVAN DROSSEL1025-68	LD 067.3101	
L210	LD 100 UH10%8,00OHM0,084A CHOKE DELEVAN DROSSEL1025-68	LD 067.3101	
L212	LD 100 UH10%8,00OHM0,084A CHOKE DELEVAN DROSSEL1025-68	LD 067.3101	
L213	LD 100 UH10%8,00OHM0,084A CHOKE DELEVAN DROSSEL1025-68	LD 067.3101	
L216	LD 100 UH10%8,00OHM0,084A CHOKE DELEVAN DROSSEL1025-68	LD 067.3101	

uns alle Rechte vor

Kennzeichen Component No.	Benennung/Beschreibung Designation	Sachnummer Stock No.	enthalten in contained in
L315	LD 10,0UH10%3,30OHM0,144A CHOKE DELEVAN DROSSEL1025-44	LD 026.4184	
L340	LD 10,0UH10%3,30OHM0,144A CHOKE DELEVAN DROSSEL1025-44	LD 026.4184	
N10	BO MC1558JG 2X OPAMP OPERATIONAL AMPLIFIER NSC LM1558J	275.0816	
N15	BO MC1558JG 2X OPAMP OPERATIONAL AMPLIFIER NSC LM1558J	275.0816	
N45	BM OM350R ANTENNEN-VERST BROADBAND AMPLIFIER VALVO OM350R SPEZ.	803.0838	
N50	BM OM350R ANTENNEN-VERST BROADBAND AMPLIFIER VALVO OM350R SPEZ.	803.0838	
N55	BM OM350R ANTENNEN-VERST BROADBAND AMPLIFIER VALVO OM350R SPEZ.	803.0838	
N70	BO LF412CN 2XFET OPAMP OPERATIONAL AMPLIFIER NSC LF412CN	356.0521	
N90	BO LF412CN 2XFET OPAMP OPERATIONAL AMPLIFIER NSC LF412CN	356.0521	
N100	BM OM350 ANTENNEN-VERST ANTENNA AMPLIFIER VALVO OM350	BM 334.4953	
N115	BM TFM2 MIXER 1.0GHZ MIXER MCL TFM-2	BM 302.6080	
N120	BM OM361A ANTENNEN-VERST ANTENNA AMPLIFIER VALVO OM361A	BM 334.5314	
N130	BO LF156J BIFET OPAMP OPERATIONAL AMPLIFIER MOTOROLA LF156J	BO 645.7251	
N170	BO LF157J BIFET OPAMP OPERATIONAL AMPLIFIER MOTOROLA LF157J	BO 343.1530	
N175	BO MC1590BGCS HF AMPL HF AMPLIFIER MOTOROLA MC1590BGCS	BO 455.4047	
N180	BO LF156J BIFET OPAMP OPERATIONAL AMPLIFIER MOTOROLA LF156J	BO 645.7251	
N190	BO LF412CN 2XFET OPAMP OPERATIONAL AMPLIFIER NSC LF412CN	356.0521	
N205	BO MC1558JG 2X OPAMP OPERATIONAL AMPLIFIER NSC LM1558J	275.0816	

Kennzeichen Component No.	Benennung/Beschreibung Designation	Sachnummer Stock No.	enthalten in contained in
N230	BO LF412CN 2XFET OPAMP OPERATIONAL AMPLIFIER NSC LF412CN	356.0521	
N240	BO LF411CN JFET OPAMP OPERATIONAL AMPLIFIER NSC LF411CN	349.3058	
N250	BO LF411CN JFET OPAMP OPERATIONAL AMPLIFIER NSC LF411CN	349.3058	
N270	BO SE5534AFE LOW N.OPAMP OPERATIONAL AMPLIFIER SIGNETICS SE5534AFE	301.3335	
N290	BO LF411CN JFET OPAMP OPERATIONAL AMPLIFIER NSC LF411CN	349.3058	
N300	BO LF412CN 2XFET OPAMP OPERATIONAL AMPLIFIER NSC LF412CN	356.0521	
N310	BO NE5532AFE 2XL.N.OPAMP OPERATIONAL AMPLIFIER VALVO NE5532AFE	BO 356.0450	
N350	BO LF411CN JFET OPAMP OPERATIONAL AMPLIFIER NSC LF411CN	349.3058	
N352	BO LF411CN JFET OPAMP OPERATIONAL AMPLIFIER NSC LF411CN	349.3058	
N355	BO LF412CN 2XFET OPAMP OPERATIONAL AMPLIFIER NSC LF412CN	356.0521	
N365	BO LF412CN 2XFET OPAMP OPERATIONAL AMPLIFIER NSC LF412CN	356.0521	
N380	BO LF412CN 2XFET OPAMP OPERATIONAL AMPLIFIER NSC LF412CN	356.0521	
N385	BO LF412CN 2XFET OPAMP OPERATIONAL AMPLIFIER NSC LF412CN	356.0521	
N400	BO NE5532AFE 2XL.N.OPAMP OPERATIONAL AMPLIFIER VALVO NE5532AFE	BO 356.0450	
N415	BO NE5532AFE 2XL.N.OPAMP OPERATIONAL AMPLIFIER VALVO NE5532AFE	BO 356.0450	
N425	BO LF412CN 2XFET OPAMP OPERATIONAL AMPLIFIER NSC LF412CN	356.0521	
N435	BO NE5532AFE 2XL.N.OPAMP OPERATIONAL AMPLIFIER VALVO NE5532AFE	BO 356.0450	
N445	BO LF412CN 2XFET OPAMP OPERATIONAL AMPLIFIER NSC LF412CN	356.0521	
N455	BO CA3240AE 2XMOS OPAMP OPERATIONAL AMPLIFIER RCA CA3240AE	302.7040	

uns alle Rechte vor

Kennzeichen Component No.	Benennung/Beschreibung Designation	Sachnummer Stock No.	enthalten in contained in
N460	BO LF156J BIFET OPAMP OPERATIONAL AMPLIFIER MOTOROLA LF156J	BO 645.7251	
N500	BO LF412CN 2XFET OPAMP OPERATIONAL AMPLIFIER NSC LF412CN	356.0521	
N505	BO LF411CN JFET OPAMP OPERATIONAL AMPLIFIER NSC LF411CN	349.3058	
N510	BO LM13600AN 2XOTA TRANSCONDUCTANCE AMPL. NSC LM13600AN	803.0796	
N520	BO MC1595L MULTIPLIER MULTIPLIER MOTOROLA MC1595L	BO 451.4365	
N530	BO LF412CN 2XFET OPAMP OPERATIONAL AMPLIFIER NSC LF412CN	356.0521	
N550	BO LF412CN 2XFET OPAMP OPERATIONAL AMPLIFIER NSC LF412CN	356.0521	
N565	BO LF412CN 2XFET OPAMP OPERATIONAL AMPLIFIER NSC LF412CN	356.0521	
N570	BO LF412CN 2XFET OPAMP OPERATIONAL AMPLIFIER NSC LF412CN	356.0521	
N580	BO LF412CN 2XFET OPAMP OPERATIONAL AMPLIFIER NSC LF412CN	356.0521	
N600	BO LF412CN 2XFET OPAMP OPERATIONAL AMPLIFIER NSC LF412CN	356.0521	
N630	BO LF411CN JFET OPAMP OPERATIONAL AMPLIFIER NSC LF411CN	349.3058	
N635	BJ PKD01FP PEAK DETECT PEAK DETECTOR PMI PKD01	358.6256	
N640	BO LF411CN JFET OPAMP OPERATIONAL AMPLIFIER NSC LF411CN	349.3058	
N645	BJ AD536AJH RMS/DC-CONV RMS/DC-CONVERTER ANALOG DEV AD536AJH	BJ 350.2639	
N650	BO LF412CN 2XFET OPAMP OPERATIONAL AMPLIFIER NSC LF412CN	356.0521	
N660	BJ AD636JH RMS/DC-CONV RMS/DC-CONVERTER ANALOG DEV AD636JH	BJ 350.2780	
N670	BO LF412CN 2XFET OPAMP OPERATIONAL AMPLIFIER NSC LF412CN	356.0521	
N685	BO LF411CN JFET OPAMP OPERATIONAL AMPLIFIER NSC LF411CN	349.3058	

ROHDE&SCHWARZ	ÄZ	Datum Date	Schaltteilliste für Parts list for	Sachnummer Stock Nr.	Blatt Page
	07	1087	ED ANALOGTEIL	802.8435.01 SA	23

Kennzeichen Component No.	Benennung/Beschreibung Designation	Sachnummer Stock No.	enthalten in contained in
P1	FP INDIREKT.STECKERL.36P. PIN CONNECTOR BERG 75160-102-36 22X1POL.	FP 242.3600	
P2	FP INDIREKT.STECKERL.36P. PIN CONNECTOR BERG 75160-102-36	FP 242.3600	
P3	FP INDIREKT.STECKERL.36P. PIN CONNECTOR BERG 75160-102-36	FP 242.3600	
P4	FP INDIREKT.STECKERL.36P. PIN CONNECTOR BERG 75160-102-36 1X3POL	FP 242.3600	
P5	FP INDIREKT.STECKERL.36P. PIN CONNECTOR BERG 75160-102-36	FP 242.3600	
BIS/TO P8			
P10	FP INDIREKT.STECKERL.36P. PIN CONNECTOR BERG 75160-102-36	FP 242.3600	
BIS/TO P21			
P24	FP INDIREKT.STECKERL.36P. PIN CONNECTOR BERG 75160-102-36	FP 242.3600	
P25	FP INDIREKT.STECKERL.36P. PIN CONNECTOR BERG 75160-102-36	FP 242.3600	
P26	FP INDIREKT.STECKERL.36P. PIN CONNECTOR BERG 75160-102-36	FP 242.3600	
P28	FP INDIREKT.STECKERL.36P. PIN CONNECTOR BERG 75160-102-36	FP 242.3600	
P30	FP INDIREKT.STECKERL.36P. PIN CONNECTOR BERG 75160-102-36	FP 242.3600	
R1	RG 100 OHM+-1%TK100 1206 CHIP RESISTOR DALE CRCW1206 100OHM F T	RG 006.8884	
R2	RG 68,1 OHM+-1%TK100 1206 CHIP RESISTOR DALE CRCW1206 68,1OHM F T	RG 006.8849	
R3	RG 100 OHM+-1%TK100 1206 CHIP RESISTOR DALE CRCW1206 100OHM F T	RG 006.8884	
R4	RD 0,8W 1,0KOHM+-3% WIRE-WOUND RESISTOR SAGE 1000S/1K/3%	RD 067.0602	
R5	RD 0,8W 1,0KOHM+-3% WIRE-WOUND RESISTOR SAGE 1000S/1K/3%	RD 067.0602	

Kennzeichen Component No.	Benennung/Beschreibung Designation	Sachnummer Stock No.	enthalten in contained in
R10	RL 0,35W 68,1 OHM+-1%TK50 RESISTOR DRALORIC SMA0207/68,1OHM-F-D	RL 082.9636	
R15	RL 0,35W 47,5KOHM+-1%TK50 RESISTOR DRALORIC SMA/207/47,5K-F-C	RL 083.1800	
R16	RL 0,35W 47,5KOHM+-1%TK50 RESISTOR DRALORIC SMA/207/47,5K-F-C	RL 083.1800	
R17	RL 0,35W 68,1 OHM+-1%TK50 RESISTOR DRALORIC SMA0207/68,1OHM-F-D	RL 082.9636	
R18	RL 0,35W 68,1 OHM+-1%TK50 RESISTOR DRALORIC SMA0207/68,1OHM-F-D	RL 082.9636	
R20	RL 0,35W 243 OHM+-1%TK50 DEPOS.-CARBON RESISTOR DRALORIC SMA0207/243OHM-F-D	RL 083.0126	
R21	RD 0,8W 1,2KOHM+-3% WIRE WOUND RESISTOR SAGE 1000S/1,2K/3%	RD 067.7113	
R22	RG 61,9 OHM+-1%TK100 1206 CHIP RESISTOR DALE CRCW1206 61,9OHM F T	RG 006.8832	
R23	RG 237 OHM+-2%TK200 1206 CHIP RESISTOR DRALORIC CGB3216 237OHM2% TK	006.8978	
R24	RG 61,9 OHM+-1%TK100 1206 CHIP RESISTOR DALE CRCW1206 61,9OHM F T	RG 006.8832	
R25	RL 0,35W 243 OHM+-1%TK50 DEPOS.-CARBON RESISTOR DRALORIC SMA0207/243OHM-F-D	RL 083.0126	
R26	RL 0,35W 499 OHM+-1%TK50 RESISTOR DRALORIC SMA0207/499OHM-F-D	RL 083.0410	
R27	RL 0,35W 2,49KOHM+-1%TK50 RESISTOR DRALORIC SMA0207/2,49K-F-D	RL 083.0890	
R30	RL 0,35W 453 OHM+-1%TK50 RESISTOR DRALORIC SMA0207/453OHM-F-D	RL 083.0378	
R31	RG 46,4 OHM+-2%TK200 1206 CHIP RESISTOR DRALORIC CGB3216 46,4OHM2% TK	006.8803	
R32	RL 0,35W 2,74KOHM+-1%TK50 RESISTOR DRALORIC SMA0207/2,74K-F-D	RL 083.0926	
R33	RG 178 OHM+-2%TK200 1206 CHIP RESISTOR DRALORIC CGB3216 178OHM2% TK	006.8949	
R34	RL 0,21W 270 OHM2% UNGEW. RESISTOR RESISTA MK1 270OHM 2% UNGEW.	RL 092.6000	
R40	RL 0,35W 10,0KOHM+-1%TK50 RESISTOR DRALORIC SMA0207/10K-F-D	RL 083.1297	

ROHDE&SCHWARZ	ÄZ	Datum Date	Schaltteilliste für Parts list for	Sachnummer Stock Nr.	Blatt Page
	07	1087	ED ANALOGTEIL	802.8435.01 SA	25

Kennzeichen Component No.	Benennung/Beschreibung Designation	Sachnummer Stock No.	enthalten in contained in
R41	RL 0,35W 511 OHM+-1%TK50 RESISTOR DRALORIC SMA0207/511OHM-F-D	RL 083.0426	
R42	RL 0,35W22,10 OHM+-1%TK50 RESISTOR DRALORIC SMA0207/22,1OHM-F-D	RL 082.9188	
R45	RG 147 OHM+-2%TK200 1206 CHIP RESISTOR DRALORIC CGB3216 147OHM2% TK	006.8926	
R46	RL 0,35W 130 OHM+-1%TK50 RESISTOR DRALORIC SMA0207/130OHM-F-D	RL 082.9888	
R47	RG 34,8 OHM+-2%TK200 1206 CHIP RESISTOR DRALORIC CGB3216 34,8OHM2% TK	006.8778	
R48	RG 56,2 OHM+-1%TK100 1206 CHIP RESISTOR DALE CRCW1206 56,2OHM F T	RG 006.8826	
R49	RG 68,1 OHM+-1%TK100 1206 CHIP RESISTOR DALE CRCW1206 68,1OHM F T	RG 006.8849	
R50	RG 23,7 OHM+-2%TK200 1206 CHIP RESISTOR DRALORIC CGB3216 23,7OHM2% TK	006.8732	
R51	RL 0,35W 130 OHM+-1%TK50 RESISTOR DRALORIC SMA0207/130OHM-F-D	RL 082.9888	
R55	RG 38,3 OHM+-2%TK200 1206 CHIP RESISTOR DRALORIC CGB3216 38,3OHM2% TK	006.8784	
R56	RG 178 OHM+-2%TK200 1206 CHIP RESISTOR DRALORIC CGB3216 178OHM2% TK	006.8949	
R57	RG 10,0 OHM+-1%TK100 1206 CHIP -RESISTOR DALE CRCW1206 10,0 OHM FT	RG 006.8649	
R58	RL 0,35W 130 OHM+-1%TK50 RESISTOR DRALORIC SMA0207/130OHM-F-D	RL 082.9888	
R60	RG 147 OHM+-2%TK200 1206 CHIP RESISTOR DRALORIC CGB3216 147OHM2% TK	006.8926	
R61	RG 34,8 OHM+-2%TK200 1206 CHIP RESISTOR DRALORIC CGB3216 34,8OHM2% TK	006.8778	
R62	RG 147 OHM+-2%TK200 1206 CHIP RESISTOR DRALORIC CGB3216 147OHM2% TK	006.8926	
R65	RG 274 KOHM+-1%TK100 RESISTOR CHIP DALE CRCW1206 274KOHM 1%	RG 007.4460	
R66	RG 56,2 OHM+-1%TK100 1206 CHIP RESISTOR DALE CRCW1206 56,2OHM F T	RG 006.8826	
R67	RG 4,64KOHM+-2%TK200 1206 CHIP RESISTOR DRALORIC CGB 3216 4,64KOHM 2%	007.0712	

uns alle Rechte vor

Kennzeichen Component No.	Benennung/Beschreibung Designation	Sachnummer Stock No.	enthalten in contained in
R70	RL 0,35W 274 KOHM+-1%TK50 RESISTOR DRALORIC SMA/207/274K-F-C	RL 083.2364	
R71	RL 0,35W 4,75KOHM+-1%TK50 RESISTOR DRALORIC SMA0207/4,75K-F-D	RL 083.1097	
R75	RN 4X 100KOHM+-2%SIL 8 H5 RESISTOR NETWORK BOURNS 4308R-102-104	RN 333.9497	
R76	RL 0,35W 47,5KOHM+-1%TK50 RESISTOR DRALORIC SMA/207/47,5K-F-C	RL 083.1800	
R77	RL 0,35W 10,0KOHM+-1%TK50 RESISTOR DRALORIC SMA0207/10K-F-D	RL 083.1297	
R80	RL 0,35W 2,00KOHM+-1%TK50 RESISTOR DRALORIC SMA0207/2,00K-F-D	RL 083.0826	
R81	RL 0,35W 5,62KOHM+-1%TK50 RESISTOR DRALORIC SMA0207/5,62K-F-C	RL 082.2190	
R85	RL 0,35W 47,5KOHM+-1%TK50 RESISTOR DRALORIC SMA/207/47,5K-F-C	RL 083.1800	
R86	RL 0,35W 59,0KOHM+-1%TK50 RESISTOR DRALORIC SMA0207/59,0K-F-C	RL 083.1845	
R87	RS 0,5W2KOHM+-10%10X10X5 CERMET POTENTIOMETER BOURNS 3386X-1-202	RS 247.7961	
R88	RS 0,5W100KOHM+-10%10X10X CERMET POTENTIOMETER T BOURNS 3386X-1-104	RS 087.7683	
R90	RL 0,35W 100 OHM+-1%TK50 METALFILM-RESISTOR DRALORIC SMA0207/100/HM-F-D	RL 082.6543	
R91	RL 0,35W 10,0KOHM+-1%TK50 RESISTOR DRALORIC SMA0207/10K-F-D	RL 083.1297	
R95	RL 0,35W 100KOHM+-1%TK50 RESISTOR DRALORIC SMA0207/100K-F-C	RL 082.1764	
R96	RL 0,35W 8,06KOHM+-1%TK50 RESISTOR DRALORIC SMA0207/8,06K-F-D	RL 083.1222	
R97	RL 0,35W 4,75KOHM+-1%TK50 RESISTOR DRALORIC SMA0207/4,75K-F-D	RL 083.1097	
R98	RL 0,35W 1MOHM+-1%TK50 RESISTOR DRALORIC SMA0207/1M-F-D	RL 082.7862	
R99	RG 4,64KOHM+-2%TK200 1206 CHIP RESISTOR DRALORIC CGB 3216 4,64KOHM 2%	007.0712	
R100	RL 0,35W 100 OHM+-1%TK50 METALFILM-RESISTOR DRALORIC SMA0207/100/HM-F-D	RL 082.6543	

ROHDE&SCHWARZ	ÄZ	Datum Date	Schaltteilliste für Parts list for	Sachnummer Stock Nr.	Blatt Page
	07	1087	ED ANALOGTEIL	802.8435.01 SA	27

Kennzeichen Component No.	Benennung/Beschreibung Designation	Sachnummer Stock No.	enthalten in contained in
R102	RS 0,3W 10KOHM+-10%CERMET TRIMMING POTENTIOMETER BECKMAN 67W 10KOHM 10%	RS 006.9145	
R103	RL 0,35W 100 OHM+-1%TK50 METALFILM-RESISTOR DRALORIC SMA0207/100/HM-F-D	RL 082.6543	
R106	RL 0,35W 1KOHM+-1%TK50 RESISTOR DRALORIC SMA0207/1K-F-C	RL 082.2160	
R107	RL 0,35W 1KOHM+-1%TK50 RESISTOR DRALORIC SMA0207/1K-F-C	RL 082.2160	
R110	RG 3,16KOHM+-2%TK200 1206 CHIP RESISTOR DRALORIC CGB 3216 3,16KOHM 2%	007.0670	
R111	RG 3,16KOHM+-2%TK200 1206 CHIP RESISTOR DRALORIC CGB 3216 3,16KOHM 2%	007.0670	
R112	RG 100KOHM+-1%TK100 1206 CHIP RESISTOR DALE CRCW1206 100KOHM F T	RG 007.1948	
R113	RG 100KOHM+-1%TK100 1206 CHIP RESISTOR DALE CRCW1206 100KOHM F T	RG 007.1948	
R114	RL 0,35W 1KOHM+-1%TK50 RESISTOR DRALORIC SMA0207/1K-F-C	RL 082.2160	
R120	RG 100 OHM+-1%TK100 1206 CHIP RESISTOR DALE CRCW1206 100OHM F T	RG 006.8884	
R121	RG 100 OHM+-1%TK100 1206 CHIP RESISTOR DALE CRCW1206 100OHM F T	RG 006.8884	
R122	RG 23,7 OHM+-2%TK200 1206 CHIP RESISTOR DRALORIC CGB3216 23,7OHM2% TK	006.8732	
R123	RL 0,35W 20,0KOHM+-1%TK50 RESISTOR DRALORIC SMA/207/20K-F-C	RL 083.1522	
R124	RL 0,35W 37,4 OHM+-1%TK50 RESISTOR DRALORIC SMA0207/37,4OHM-F-D	RL 082.9407	
R125	RL 0,35W 1,50KOHM+-1%TK50 RESISTOR DRALORIC SMA0207/1,50K-F-D	RL 083.0732	
R126	RL 0,35W 1,50KOHM+-1%TK50 RESISTOR DRALORIC SMA0207/1,50K-F-D	RL 083.0732	
R127	RG 147 OHM+-2%TK200 1206 CHIP RESISTOR DRALORIC CGB3216 147OHM2% TK	006.8926	
R128	RG 20,0 OHM+-1%TK100 1206 RESISTOR CHIP DALE CRW1206 20,0OHM F-T	RG 007.5472	
R129	RG 51,1 OHM+-1%TK100 1206 CHIP RESISTOR DALE CRCW1206 51,1OHM F T	RG 006.8810	

uns alle Rechte vor

ROHDE&SCHWARZ	ÄZ 07	Datum Date 1087	Schaltteilliste für Parts list for ED ANALOGTEIL	Sachnummer Stock Nr. 802.8435.01 SA	Blatt Page 28

Kennzeichen Component No.	Benennung/Beschreibung Designation	Sachnummer Stock No.	enthalten in contained in
R130	RL 0,35W 10,0KOHM+-1%TK50 RESISTOR DRALORIC SMA0207/10K-F-D	RL 083.1297	
R131	RL 0,35W 100KOHM+-1%TK50 RESISTOR DRALORIC SMA0207/100K-F-C	RL 082.1764	
R132	RL 0,35W 20,0KOHM+-1%TK50 RESISTOR DRALORIC SMA/207/20K-F-C	RL 083.1522	
R136	RL 0,35W 1KOHM+-1%TK50 RESISTOR DRALORIC SMA0207/1K-F-C	RL 082.2160	
R137	RL 0,35W 1KOHM+-1%TK50 RESISTOR DRALORIC SMA0207/1K-F-C	RL 082.2160	
R138	RL 0,35W 1KOHM+-1%TK50 RESISTOR DRALORIC SMA0207/1K-F-C	RL 082.2160	
R139	RG 1000 OHM+-1%TK100 1206 CHIP RESISTOR DALE CRCW1206 1,0KOHM F T	RG 006.7271	
R140	RG 1000 OHM+-1%TK100 1206 CHIP RESISTOR DALE CRCW1206 1,0KOHM F T	RG 006.7271	
R150	RL 0,35W 49,9 OHM+-1%TK50 RESISTOR RESISTA MK2	RL 082.9520	
R151	RG 51,1 OHM+-1%TK100 1206 CHIP RESISTOR DALE CRCW1206 51,1OHM F T	RG 006.8810	
R154	RL 0,21W 10,0 OHM+-1%TK50 RESISTOR RESISTA MK1 10,0OHM 1% TK50	RL 092.1715	
R156	RL 0,21W 1,21KOHM+-1%TK50 RESISTOR RESISTA MK1 1K21 1% TK50	RL 092.1450	
R157	RL 0,21W 221 OHM+-1%TK50 RESISTOR RESISTA MK1 221OHM 1% TK50	RL 092.1367	
R158	RL 0,21W 1,82KOHM+-1%TK50 RESISTOR RESISTA MK1 1K82 1% TK50	RL 092.1473	
R159	RL 0,21W 2,00KOHM+-1%TK50 RESISTOR RESISTA MK1 2K 1% TK50	092.0283	
R160	RL 0,21W 10,0KOHM+-1%TK50 RESISTOR RESISTA MK1 10K0 1% TK50	RL 092.1567	
R161	RL 0,21W 10,0KOHM+-1%TK50 RESISTOR RESISTA MK1 10K0 1% TK50	RL 092.1567	
R162	RL 0,21W 1,50KOHM+-1%TK50 RESISTOR RESISTA MK1 1K5 1% TK50	RL 092.1467	
R163	RL 0,21W 90,9 OHM+-1%TK50 RESISTOR RESISTA MK1	092.0125	

ROHDE&SCHWARZ	ÄZ	Datum Date	Schaltteilliste für Parts list for	Sachnummer Stock Nr.	Blatt Page
	07	1087	ED ANALOGTEIL	802.8435.01 SA	29

Kennzeichen Component No.	Benennung/Beschreibung Designation	Sachnummer Stock No.	enthalten in contained in
R164	RL 0,21W 1,21KOHM+-1%TK50 RESISTOR RESISTA MK1 1K21 1% TK50	RL 092.1450	
R165	RL 0,21W 1,50KOHM+-1%TK50 RESISTOR RESISTA MK1 1K5 1% TK50	RL 092.1467	
R166	RL 0,21W 10,0KOHM+-1%TK50 RESISTOR RESISTA MK1 10K0 1% TK50	RL 092.1567	
R167	RG 1,47KOHM+-2%TK200 1206 CHIP RESISTOR DRALORIC CGB 3216 1,47KOHM 2%	006.9980	
R168	RL 0,21W 10,0KOHM+-1%TK50 RESISTOR RESISTA MK1 10K0 1% TK50	RL 092.1567	
R169	RG 3,16KOHM+-2%TK200 1206 CHIP RESISTOR DRALORIC CGB 3216 3,16KOHM 2%	007.0670	
R170	RL 0,35W 2,21KOHM+-1%TK50 RESISTOR DRALORIC SMA 0207/2,21K-F-C	RL 082.2477	
R171	RL 0,35W 221 KOHM+-1%TK50 RESISTOR DRALORIC SMA0207/221K-F-C	RL 083.2270	
R172	RG 28,7KOHM+-2%TK200 1206 CHIP RESISTOR DRALORIC CGB 3216 28,7KOHM 2%	007.0964	
R175	RL 0,35W 1KOHM+-1%TK50 RESISTOR DRALORIC SMA0207/1K-F-C	RL 082.2160	
R176	RL 0,35W 1KOHM+-1%TK50 RESISTOR DRALORIC SMA0207/1K-F-C	RL 082.2160	
R177	RL 0,35W 221 OHM+-1%TK50 RESISTOR DRALORIC SMA0207/221OHM-F-D	RL 083.0084	
R180	RN 4X1,0KOHM+-2%SIL 8 H5 RESISTOR NETWORK BOURNS 4308R-102-102	RN 291.4370	
R190	RL 0,35W 4,99KOHM+-1%TK50 RESISTOR DRALORIC SMA0207/4,99K-F-D	RL 083.1116	
R191	RL 0,35W 32,4KOHM+-1%TK50 RESISTOR DRALORIC SMA0207/32,4K-F-C	RL 083.1668	
R192	RL 0,35W 4,75KOHM+-1%TK50 RESISTOR DRALORIC SMA0207/4,75K-F-D	RL 083.1097	
R195	RN 4X 10KOHM+-2%SIL 8 H5 RESISTOR NETWORK BOURNS 4308R-102-103	RN 291.5154	
R196	RL 0,35W 665 OHM+-1%TK50 RESISTOR DRALORIC SMA0207/665OHM-F-C	RL 082.2419	
R197	RS 0,3W2,0KOHM+-10%CERMET TRIMMING POTENTIOMETER BECKMAN 67W 2KOHM 10%	RS 006.9139	

Kennzeichen Component No.	Benennung/Beschreibung Designation	Sachnummer Stock No.	enthalten in contained in
R198	RL 0,35W 30,9KOHM+-1%TK50 RESISTOR DRALORIC SMA0207/30,9K-F-C	RL 083.1645	
R200	RL 0,35W 10,0KOHM+-1%TK50 RESISTOR DRALORIC SMA0207/10K-F-D	RL 083.1297	
R201	RL 0,35W10,0KOHM+-0,1%T25 RESISTOR DRALORIC SMA0207/10K-B-E	RL 084.3064	
R202	RL 0,35W10,0KOHM+-0,1%T25 RESISTOR DRALORIC SMA0207/10K-B-E	RL 084.3064	
R203	RL 0,35W10,0KOHM+-0,1%T25 RESISTOR DRALORIC SMA0207/10K-B-E	RL 084.3064	
R204	RL 0,35W10,0KOHM+-0,1%T25 RESISTOR DRALORIC SMA0207/10K-B-E	RL 084.3064	
R213	RS 0,3W 500 OHM+-10%CERM. TRIMMING POTENTIOMETER BOURNS 3296W-1- 500OHM+-10%	RS 006.6675	
R214	RG 13,0KOHM+-1%TK100 1206 RESISTOR CHIP DALE CRCW1206 13,0KOHM FT	RG 007.5837	
R215	RG 13,0KOHM+-1%TK100 1206 RESISTOR CHIP DALE CRCW1206 13,0KOHM FT .TRIMMWERT	RG 007.5837	
R220	RG 4,64KOHM+-2%TK200 1206 CHIP RESISTOR DRALORIC CGB 3216 4,64KOHM 2%	007.0712	
R221	RG 4,64KOHM+-2%TK200 1206 CHIP RESISTOR DRALORIC CGB 3216 4,64KOHM 2%	007.0712	
R222	RG 1000 OHM+-1%TK100 1206 CHIP RESISTOR DALE CRCW1206 1,0KOHM F T	RG 006.7271	
R223	RL 0,35W 10,0KOHM+-1%TK50 RESISTOR DRALORIC SMA0207/10K-F-D	RL 083.1297	
R224	RL 0,35W 374 KOHM+-1%TK50 RESISTOR RESISTA MK2	RL 083.2493	
R225	RL 0,35W 1MOHM+-1%TK50 RESISTOR DRALORIC SMA0207/1M-F-D	RL 082.7862	
R227	RL 0,35W 402 OHM+-1%TK50 RESISTOR DRALORIC SMA0207/402OHM-F-D	RL 083.0326	
R228	RG 38,3KOHM+-2%TK200 1206 CHIP RESISTOR DRALORIC CGB 3216 38,3KOHM 2%	007.0993	
R230	RL 0,35W 10,0KOHM+-1%TK50 RESISTOR DRALORIC SMA0207/10K-F-D	RL 083.1297	

Kennzeichen Component No.	Benennung/Beschreibung Designation	Sachnummer Stock No.	enthalten in contained in
R231	RL 0,35W 10,0KOHM+-1%TK50 RESISTOR DRALORIC SMA0207/10K-F-D	RL 083.1297	
R232	RL 0,35W 60,4KOHM+-1%TK50 RESISTOR DRALORIC SMA0207/60,4K-F-C	RL 083.1851	
R233	RL 0,35W66,5KOHM+-0,1%T25 RESISTOR DRALORIC SMA/207/66,5K-B-E	RL 084.4648	
R234	RL 0,35W 14,3KOHM+-1%TK50 RESISTOR DRALORIC SMA0207/14,3K-F-D	RL 083.1380	
R235	RL 0,35W 115 KOHM+-1%TK50 RESISTOR DRALORIC SMA0207/115K-F-C	RL 083.2058	
R240	RL 0,21W 10,0KOHM+-1%TK50 RESISTOR RESISTA MK1 10K0 1% TK50	RL 092.1567	
R241	RL 0,35W 75,0KOHM+-1%TK50 RESISTOR DRALORIC SMA/207/75K-F-C	RL 083.1916	
R242	RL 0,35W 10,0KOHM+-1%TK50 RESISTOR DRALORIC SMA0207/10K-F-D	RL 083.1297	
R250	RG 4,64KOHM+-2%TK200 1206 CHIP RESISTOR DRALORIC CGB 3216 4,64KOHM 2%	007.0712	
R252	RL 0,35W 243 OHM+-1%TK50 DEPOS.-CARBON RESISTOR DRALORIC SMA0207/243OHM-F-D	RL 083.0126	
R254	RS 0,3W 10KOHM+-10%CERMET TRIMMING POTENTIOMETER BECKMAN 67W 10KOHM 10%	RS 006.9145	
R260	RL 0,35W 2,21KOHM+-1%TK50 RESISTOR DRALORIC SMA 0207/2,21K-F-C	RL 082.2477	
R261	RL 0,35W 3,32KOHM+-1%TK50 RESISTOR DRALORIC SMA0207/3,32K-F-D	RL 083.0990	
R262	RL 0,35W 3,32KOHM+-1%TK50 RESISTOR DRALORIC SMA0207/3,32K-F-D	RL 083.0990	
R263	RL 0,35W 2,21KOHM+-1%TK50 RESISTOR DRALORIC SMA 0207/2,21K-F-C	RL 082.2477	
R264	RG 464 OHM+-2%TK200 1206 CHIP RESISTOR DRALORIC CGB3216 464OHM2% TK	006.9045	
R265	RL 0,35W 475 OHM+-1%TK50 RESISTOR DRALORIC SMA0207/475OHM-F-D	RL 083.0390	
R266	RL 0,35W 511 OHM+-1%TK50 RESISTOR DRALORIC SMA0207/511OHM-F-D	RL 083.0426	
R267	RL 0,35W 511 OHM+-1%TK50 RESISTOR DRALORIC SMA0207/511OHM-F-D	RL 083.0426	

Kennzeichen Component No.	Benennung/Beschreibung Designation	Sachnummer Stock No.	enthalten in contained in
R270	RL 0,35W 10,0KOHM+-1%TK50 RESISTOR DRALORIC SMA0207/10K-F-D	RL 083.1297	
R271	RL 0,35W 10,0KOHM+-1%TK50 RESISTOR DRALORIC SMA0207/10K-F-D	RL 083.1297	
R272	RL 0,35W 143 KOHM+-1%TK50 RESISTOR DRALORIC SMA/207/143K-F-C	RL 083.2112	
R273	RL 0,35W 143 KOHM+-1%TK50 RESISTOR DRALORIC SMA/207/143K-F-C	RL 083.2112	
R274	RL 0,35W 22,1KOHM+-1%TK50 RESISTOR DRALORIC SMA/207/22,1K-F-C	RL 083.1545	
R275	RS 0,3W100KOHM+-10%CERMET TRIMMING POTENTIOMETER BECKMAN 67W 100KOHM 10%	RS 006.9168	
R279	RL 0,35W 1KOHM+-1%TK50 RESISTOR DRALORIC SMA0207/1K-F-C	RL 082.2160	
R281	RG 10,0 OHM+-1%TK100 1206 CHIP -RESISTOR DALE CRCW1206 10,0 OHM FT	RG 006.8649	
R282	RG 10 KOHM+-1%TK100 1206 CHIP RESISTOR DALE CRCW1206 10,0KOHM FT	RG 007.0793	
R283	RG 38,3KOHM+-2%TK200 1206 CHIP RESISTOR DRALORIC CGB 3216 38,3KOHM 2%	007.0993	
R284	RG 38,3KOHM+-2%TK200 1206 CHIP RESISTOR DRALORIC CGB 3216 38,3KOHM 2%	007.0993	
R285	RL 0,21W 39,2KOHM+-1%TK50 RESISTOR RESISTA MK1 39K2 1% TK50	RL 092.1638	
R288	RL 0,35W 100KOHM+-1%TK50 RESISTOR DRALORIC SMA0207/100K-F-C	RL 082.1764	
R289	RL 0,35W 10,0KOHM+-1%TK50 RESISTOR DRALORIC SMA0207/10K-F-D	RL 083.1297	
R290	RG 38,3KOHM+-2%TK200 1206 CHIP RESISTOR DRALORIC CGB 3216 38,3KOHM 2%	007.0993	
R291	RL 0,35W1,50MOHM+-1%TK50 METALFILMRESISTOR RESISTA MK2 1,50MOHM 1% TK50	RL 099.8138	
R292	RL 0,35W 56,2KOHM+-1%TK50 RESISTOR DRALORIC SMA0207/56,2K-F-C	RL 082.2231	
R294	RL 0,35W 10,0KOHM+-1%TK50 RESISTOR DRALORIC SMA0207/10K-F-D	RL 083.1297	
R300	RL 0,35W 14,3KOHM+-1%TK50 RESISTOR DRALORIC SMA0207/14,3K-F-D	RL 083.1380	

Kennzeichen Component No.	Benennung/Beschreibung Designation	Sachnummer Stock No.	enthalten in contained in
R302	RL 0,35W 3,57KOHM+-1%TK50 RESISTOR DRALORIC SMA0207/3,57K-F-D	RL 083.1022	
R303	RL 0,35W 511 OHM+-1%TK50 RESISTOR DRALORIC SMA0207/511OHM-F-D	RL 083.0426	
R304	RS 0,3W 1KOHM+-10%CERMET TRIMMING POTENTIOMETER BOURNS 3296W-1- 1KOHM+-10%	RS 006.6681	
R305	RL 0,35W 2,15KOHM+-1%TK50 RESISTOR DRALORIC SMA0207/2,15K-F-D	RL 083.0855	
R306	RL 0,35W 4,87KOHM+-1%TK50 RESISTOR DRALORIC SMA0207/4,87K-F-D	RL 083.1100	
R310	RL 0,35W 3,09KOHM+-1%TK50 RESISTOR DRALORIC SMA0207/3,09K-F-D	RL 083.0978	
R311	RL 0,35W 3,83KOHM+-1%TK50 RESISTOR DRALORIC SMA0207/3,83K-F-D	RL 082.6614	
R314	RL 0,35W 604 OHM+-1%TK50 RESISTOR DRALORIC SMA/207/604OHM-F-C	RL 082.2425	
R315	RL 0,35W 604 OHM+-1%TK50 RESISTOR DRALORIC SMA/207/604OHM-F-C	RL 082.2425	
R317	RL 0,35W 3,01KOHM+-1%TK50 RESISTOR DRALORIC SMA0207/3,01K-F-D	RL 083.0961	
R318	RL 0,35W 1KOHM+-1%TK50 RESISTOR DRALORIC SMA0207/1K-F-C	RL 082.2160	
R350	RL 0,35W 909 KOHM+-1%TK50 RESISTOR DRALORIC SMA0207/909K-F-C	RL 083.2858	
R351	RL 0,35W 97,6KOHM+-1%TK50 RESISTOR DRALORIC SMA0207/97,6K-F-C	RL 083.2006	
R352	RL 0,35W 4,75KOHM+-1%TK50 RESISTOR DRALORIC SMA0207/4,75K-F-D	RL 083.1097	
R353	RL 0,35W 10,0KOHM+-1%TK50 RESISTOR DRALORIC SMA0207/10K-F-D	RL 083.1297	
R354	RL 0,35W 4,12KOHM+-1%TK50 RESISTOR DRALORIC SMA0207/4,12K-F-D	RL 083.1051	
R355	RL 0,35W 30,9KOHM+-1%TK50 RESISTOR DRALORIC SMA0207/30,9K-F-C	RL 083.1645	
R357	RL 0,35W 39,2KOHM+-1%TK50 RESISTOR DRALORIC SMA/207/39,2K-F-C	RL 083.1745	
R360	RL 0,35W 110 KOHM+-1%TK50 RESISTOR DRALORIC SMA0207/110K-F-C	RL 083.2041	

Kennzeichen Component No.	Benennung/Beschreibung Designation	Sachnummer Stock No.	enthalten in contained in
R361	RL 0,35W 26,7KOHM+-1%TK50 RESISTOR DRALORIC SMA/207/26,7K-F-C	RL 083.1597	
R365	RL 0,35W 29,4KOHM+-1%TK50 RESISTOR DRALORIC SMA0207/29,4K-F-C	RL 083.1622	
R366	RL 0,35W 1,78KOHM+-1%TK50 RESISTOR DRALORIC SMA0207/1,78K-F-D	RL 082.6643	
R370	RL 0,35W 604 OHM+-1%TK50 RESISTOR DRALORIC SMA/207/604OHM-F-C	RL 082.2425	
R371	RL 0,35W 110 KOHM+-1%TK50 RESISTOR DRALORIC SMA0207/110K-F-C	RL 083.2041	
R380	RL 0,35W 76,8KOHM+-1%TK50 RESISTOR DRALORIC SMA0207/76,8K-F-C	RL 083.1922	
R381	RL 0,35W 28,0KOHM+-1%TK50 RESISTOR DRALORIC SMA/207/28,0K-F-C	RL 083.1600	
R382	RL 0,35W 5,62KOHM+-1%TK50 RESISTOR DRALORIC SMA0207/5,62K-F-C	RL 082.2190	
R385	RL 0,35W 21,0KOHM+-1%TK50 RESISTOR DRALORIC SMA/207/21,0K-F-C	RL 083.1539	
R386	RL 0,35W 19,6KOHM+-1%TK50 RESISTOR DRALORIC SMA/207/19,6K-F-C	RL 083.1516	
R387	RL 0,35W 1KOHM+-1%TK50 RESISTOR DRALORIC SMA0207/1K-F-C	RL 082.2160	
R388	RS 0,5W500 OHM+-10%10X10X CERMET POTENTIOMETER BOURNS 3386X-1-501	RS 247.7955	
R389	RL 0,35W 1,96KOHM+-1%TK50 RESISTOR DRALORIC SMA0207/1.96K-F-D	RL 083.0810	
R390	RL 0,35W 18,2KOHM+-1%TK50 RESISTOR DRALORIC SMA/207/18,2K-F-C	RL 083.1480	
R391	RL 0,35W 18,2KOHM+-1%TK50 RESISTOR DRALORIC SMA/207/18,2K-F-C	RL 083.1480	
R400	RL 0,35W 5,90KOHM+-1%TK50 RESISTOR DRALORIC SMA0207/5,90K-F-D	RL 083.1145	
R401	RL 0,35W 5,90KOHM+-1%TK50 RESISTOR DRALORIC SMA0207/5,90K-F-D	RL 083.1145	
R402	RL 0,35W 5,62KOHM+-1%TK50 RESISTOR DRALORIC SMA0207/5,62K-F-C	RL 082.2190	
R403	RL 0,35W4,64KOHM+-1%TK50 RESISTOR DRALORIC SMA0207/4,64K-F-C	RL 082.1687	

Kennzeichen Component No.	Benennung/Beschreibung Designation	Sachnummer Stock No.	enthalten in contained in
R404	RL 0,35W 100 OHM+-1%TK50 METALFILM-RESISTOR DRALORIC SMA0207/100/HM-F-D	RL 082.6543	
R405	RL 0,35W 26,1KOHM+-1%TK50 RESISTOR DRALORIC SMA/207/26,1K-F-C	RL 082.2431	
R415	RL 0,35W 300KOHM+-1%TK50 RESISTOR DRALORIC SMA0207/300K-F-D	RL 082.7840	
R416	RL 0,35W 1,50KOHM+-1%TK50 RESISTOR DRALORIC SMA0207/1,50K-F-D	RL 083.0732	
R417	RL 0,35W 1,54KOHM+-1%TK50 RESISTOR DRALORIC SMA0207/1,54K-F-D	RL 083.0749	
R425	RL 0,35W 35,7KOHM+-1%TK50 RESISTOR DRALORIC SMA0207/35,7K-F-C	RL 083.1700	
R426	RL 0,35W 5,62KOHM+-1%TK50 RESISTOR DRALORIC SMA0207/5,62K-F-C	RL 082.2190	
R427	RL 0,35W 115 KOHM+-1%TK50 RESISTOR DRALORIC SMA0207/115K-F-C	RL 083.2058	
R430	RL 0,35W 100KOHM+-1%TK50 RESISTOR DRALORIC SMA0207/100K-F-C	RL 082.1764	
R435	RL 0,35W 300KOHM+-1%TK50 RESISTOR DRALORIC SMA0207/300K-F-D	RL 082.7840	
R436	RL 0,35W 1,50KOHM+-1%TK50 RESISTOR DRALORIC SMA0207/1,50K-F-D	RL 083.0732	
R437	RL 0,35W 1,54KOHM+-1%TK50 RESISTOR DRALORIC SMA0207/1,54K-F-D	RL 083.0749	
R445	RL 0,35W 2,21KOHM+-1%TK50 RESISTOR DRALORIC SMA 0207/2,21K-F-C	RL 082.2477	
R446	RL 0,35W 2,21KOHM+-1%TK50 RESISTOR DRALORIC SMA 0207/2,21K-F-C	RL 082.2477	
R447	RL 0,35W 100KOHM+-1%TK50 RESISTOR DRALORIC SMA0207/100K-F-C	RL 082.1764	
R448	RL 0,35W 100KOHM+-1%TK50 RESISTOR DRALORIC SMA0207/100K-F-C	RL 082.1764	
R451	RL 0,35W 1KOHM+-1%TK50 RESISTOR DRALORIC SMA0207/1K-F-C	RL 082.2160	
R452	RL 0,35W 249 OHM+-1%TK50 RESISTOR DRALORIC SMA0207/249OHM-F-D	RL 083.0132	
R455	RL 0,35W 16,9KOHM+-1%TK50 RESISTOR DRALORIC SMA/207/16,9K-F-C	RL 083.1451	

Kennzeichen Component No.	Benennung/Beschreibung Designation	Sachnummer Stock No.	enthalten in contained in
R456	RL 0,35W 102 OHM+-1%TK50 RESISTOR DRALORIC SMA0207/102OHM-F-D	RL 082.9788	
R460	RL 0,35W 49,9KOHM+-1%TK50 RESISTOR DRALORIC SMA 0207/49,9K-F-C	RL 082.6114	
R461	RL 0,35W 2,21KOHM+-1%TK50 RESISTOR DRALORIC SMA 0207/2,21K-F-C	RL 082.2477	
R471	RL 0,35W 100 OHM+-1%TK50 METALFILM-RESISTOR DRALORIC SMA0207/100/HM-F-D	RL 082.6543	
R472	RL 0,35W4,64KOHM+-1%TK50 RESISTOR DRALORIC SMA0207/4,64K-F-C	RL 082.1687	
R475	RL 0,35W4,64KOHM+-1%TK50 RESISTOR DRALORIC SMA0207/4,64K-F-C	RL 082.1687	
R480	RL 0,35W 10,0 OHM+-1%TK50 RESISTOR DRALORIC SMA0207/10OHM-F-D	RL 082.8852	
R485	RL 0,35W 10,0 OHM+-1%TK50 RESISTOR DRALORIC SMA0207/10OHM-F-D	RL 082.8852	
R500	RL 0,35W 30,1KOHM+-1%TK50 RESISTOR DRALORIC SMA0207/30,1K-F-C	RL 083.1639	
R501	RL 0,35W 59,0KOHM+-1%TK50 RESISTOR DRALORIC SMA0207/59,0K-F-C	RL 083.1845	
R502	RL 0,35W3,92MOHM+-1%TK50 METALFILMRESISTOR RESISTA MK2 3,92MOHM 1% TK50	RL 099.8238	
R510	RL 0,35W 10,0KOHM+-1%TK50 RESISTOR DRALORIC SMA0207/10K-F-D	RL 083.1297	
R511	RL 0,35W 100KOHM+-1%TK50 RESISTOR DRALORIC SMA0207/100K-F-C	RL 082.1764	
R512	RL 0,35W 1KOHM+-1%TK50 RESISTOR DRALORIC SMA0207/1K-F-C	RL 082.2160	
R513	RL 0,35W 100KOHM+-1%TK50 RESISTOR DRALORIC SMA0207/100K-F-C	RL 082.1764	
R514	RL 0,35W 10,0KOHM+-1%TK50 RESISTOR DRALORIC SMA0207/10K-F-D	RL 083.1297	
R515	RL 0,35W 16,9KOHM+-1%TK50 RESISTOR DRALORIC SMA/207/16,9K-F-C	RL 083.1451	
R520	RL 0,35W 10,0KOHM+-1%TK50 RESISTOR DRALORIC SMA0207/10K-F-D	RL 083.1297	
R521	RL 0,35W13,7KOHM+-1%TK50 RESISTOR DRALORIC SMA0207/13,7K-F-D	RL 082.6608	

Kennzeichen Component No.	Benennung/Beschreibung Designation	Sachnummer Stock No.	enthalten in contained in
R522	RL 0,35W13,7KOHM+-1%TK50 RESISTOR DRALORIC SMA0207/13,7K-F-D	RL 082.6608	
R523	RL 0,35W 10,0KOHM+-1%TK50 RESISTOR DRALORIC SMA0207/10K-F-D	RL 083.1297	
R524	RL 0,35W 10,0KOHM+-1%TK50 RESISTOR DRALORIC SMA0207/10K-F-D	RL 083.1297	
R525	RL 0,35W 3,01KOHM+-1%TK50 RESISTOR DRALORIC SMA0207/3,01K-F-D	RL 083.0961	
R530	RL 0,35W 2,74KOHM+-1%TK50 RESISTOR DRALORIC SMA0207/2,74K-F-D	RL 083.0926	
R531	RL 0,35W 2,74KOHM+-1%TK50 RESISTOR DRALORIC SMA0207/2,74K-F-D	RL 083.0926	
R532	RL 0,35W25,5KOHM+-1%TK50 RESISTOR DRALORIC SMA0207/25,5K-F-C	RL 083.1580	
R533	RL 0,35W25,5KOHM+-1%TK50 RESISTOR DRALORIC SMA0207/25,5K-F-C	RL 083.1580	
R534	RL 0,35W 37,4KOHM+-1%TK50 RESISTOR DRALORIC SMA/207/37,4K-F-C	RL 083.1722	
R540	RL 0,35W 10,0KOHM+-1%TK50 RESISTOR DRALORIC SMA0207/10K-F-D	RL 083.1297	
R541	RL 0,35W 1,47KOHM+-1%TK50 RESISTOR DRALORIC SMA0207/1,47K-F-D	RL 083.0726	
R542	RS 0,5W20KOHM+-10%10X10X5 CERMET POTENTIOMETER T BOURNS 3386X-1-203	RS 087.7660	
R543	RS 0,5W20KOHM+-10%10X10X5 CERMET POTENTIOMETER T BOURNS 3386X-1-203	RS 087.7660	
R544	RL 0,35W 10,0KOHM+-1%TK50 RESISTOR DRALORIC SMA0207/10K-F-D	RL 083.1297	
R545	RL 0,35W 1,47KOHM+-1%TK50 RESISTOR DRALORIC SMA0207/1,47K-F-D	RL 083.0726	
R550	RL 0,35W 30,1KOHM+-1%TK50 RESISTOR DRALORIC SMA0207/30,1K-F-C	RL 083.1639	
R552	RL 0,35W 11,0KOHM+-1%TK50 RESISTOR DRALORIC SMA0207/11K-F-D	RL 083.1322	
R553	RL 0,35W 11,0KOHM+-1%TK50 RESISTOR DRALORIC SMA0207/11K-F-D	RL 083.1322	
R555	RL 0,35W 26,7KOHM+-1%TK50 RESISTOR DRALORIC SMA/207/26,7K-F-C	RL 083.1597	

Kennzeichen Component No.	Benennung/Beschreibung Designation	Sachnummer Stock No.	enthalten in contained in
R556	RS 0,5W5KOHM+-10%10X10X5 CERMET POTENTIOMETER BOURNS 3386X-1-502	RS 247.7978	
R557	RS 0,5W5KOHM+-10%10X10X5 CERMET POTENTIOMETER BOURNS 3386X-1-502	RS 247.7978	
R558	RL 0,35W 26,7KOHM+-1%TK50 RESISTOR DRALORIC SMA/207/26,7K-F-C	RL 083.1597	
R559	RL 0,35W 2,00KOHM+-1%TK50 RESISTOR DRALORIC SMA0207/2,00K-F-D	RL 083.0826	
R560	RL 0,35W1,02KOHM+-0,1%T25 RESISTOR DRALORIC SMA0207	RL 083.9169	
R561	RL 0,35W 51,1KOHM+-1%TK50 RESISTOR DRALORIC SMA/207/51,1K-F-C	RL 083.1822	
R562	RL 0,35W 5,49KOHM+-1%TK50 RESISTOR DRALORIC SMA0207/5,49K-F-D	RL 083.1139	
R565	RL 0,35W 20,0KOHM+-1%TK50 RESISTOR DRALORIC SMA/207/20K-F-C	RL 083.1522	
R566	RS 0,5W5KOHM+-10%10X10X5 CERMET POTENTIOMETER BOURNS 3386X-1-502	RS 247.7978	
R567	RL 0,35W 18,2KOHM+-1%TK50 RESISTOR DRALORIC SMA/207/18,2K-F-C	RL 083.1480	
R568	RL 0,35W 10,0KOHM+-1%TK50 RESISTOR DRALORIC SMA0207/10K-F-D	RL 083.1297	
R569	RL 0,35W 20,0KOHM+-1%TK50 RESISTOR DRALORIC SMA/207/20K-F-C	RL 083.1522	
R570	RL 0,35W 20,0KOHM+-1%TK50 RESISTOR DRALORIC SMA/207/20K-F-C	RL 083.1522	
R571	RS 0,5W5KOHM+-10%10X10X5 CERMET POTENTIOMETER BOURNS 3386X-1-502	RS 247.7978	
R572	RL 0,35W 17,4KOHM+-1%TK50 RESISTOR DRALORIC SMA0207/17,4K-F-C	RL 083.1468	
R573	RL 0,35W 10,0KOHM+-1%TK50 RESISTOR DRALORIC SMA0207/10K-F-D	RL 083.1297	
R574	RL 0,35W 20,0KOHM+-1%TK50 RESISTOR DRALORIC SMA/207/20K-F-C	RL 083.1522	
R580	RL 0,35W 5,49KOHM+-1%TK50 RESISTOR DRALORIC SMA0207/5,49K-F-D	RL 083.1139	
R581	RL 0,35W 10,0KOHM+-1%TK50 RESISTOR DRALORIC SMA0207/10K-F-D	RL 083.1297	

Kennzeichen Component No.	Benennung/Beschreibung Designation	Sachnummer Stock No.	enthalten in contained in
R582	RL 0,35W 750 OHM+-1%TK50 RESISTOR DRALORIC SMA0207/750OHM-F-C	RL 082.2360	
R600	RL 0,35W 100KOHM+-1%TK50 RESISTOR DRALORIC SMA0207/100K-F-C	RL 082.1764	
R601	RL 0,35W 107 KOHM+-1%TK50 RESISTOR DRALORIC SMA0207/107K-F-C	RL 083.2035	
R635	RL 0,35W 10,0KOHM+-1%TK50 RESISTOR DRALORIC SMA0207/10K-F-D	RL 083.1297	
R636	RL 0,35W 150 KOHM+-1%TK50 RESISTOR DRALORIC SMA/207/150K-F-C	RL 083.2129	
R637	RL 0,35W 100 OHM+-1%TK50 METALFILM-RESISTOR DRALORIC SMA0207/100/HM-F-D	RL 082.6543	
R650	RL 0,35W 2,43KOHM+-1%TK50 RESISTOR DRALORIC SMA0207/2,43K-F-D	RL 083.0884	
R651	RL 0,35W 5,11KOHM+-1%TK50 RESISTOR DRALORIC SMA0207/5,11K-F-C	RL 082.2348	
R652	RL 0,35W 15,4KOHM+-1%TK50 RESISTOR DRALORIC SMA0207/15,4K-F-D	RL 083.1416	
R653	RL 0,35W 7,50KOHM+-1%TK50 RESISTOR DRALORIC SMA0207/7,5K-F-D	RL 083.1197	
R655	RL 0,35W 2,55KOHM+-1%TK50 RESISTOR DRALORIC SMA/207/2,55K-F-C	RL 082.2354	
R656	RL 0,35W 5,36KOHM+-1%TK50 RESISTOR DRALORIC SMA 0207/5,36K-F-C	RL 082.2460	
R657	RL 0,35W 12,1KOHM+-1%TK50 RESISTOR DRALORIC SMA0207/12,1K-F-D	RL 083.1351	
R658	RL 0,35W 5,90KOHM+-1%TK50 RESISTOR DRALORIC SMA0207/5,90K-F-D	RL 083.1145	
R660	RL 0,35W 24,3KOHM+-1%TK50 RESISTOR DRALORIC SMA/207/24,3K-F-C	RL 083.1574	
R670	RL 0,35W 10,0KOHM+-1%TK50 RESISTOR DRALORIC SMA0207/10K-F-D	RL 083.1297	
R671	RL 0,35W 4,22KOHM+-1%TK50 RESISTOR DRALORIC SMA0207/4,22K-F-D	RL 083.1068	
R674	RL 0,35W 10,0KOHM+-1%TK50 RESISTOR DRALORIC SMA0207/10K-F-D	RL 083.1297	
R675	RN 4X 10KOHM+-2%SIL 8 H5 RESISTOR NETWORK BOURNS 4308R-102-103	RN 291.5154	

Kennzeichen Component No.	Benennung/Beschreibung Designation	Sachnummer Stock No.	enthalten in contained in
R685	RL 0,35W 14,3KOHM+-1%TK50 RESISTOR DRALORIC SMA0207/14,3K-F-D	RL 083.1380	
R686	RL 0,35W 9,76KOHM+-1%TK50 RESISTOR DRALORIC SMA0207/9,76K-F-D	RL 083.1280	
R687	RL 0,35W 3,09KOHM+-1%TK50 RESISTOR DRALORIC SMA0207/3,09K-F-D	RL 083.0978	
R688	RL 0,35W 976 OHM+-1%TK50 RESISTOR DRALORIC SMA0207/976OHM-F-D	RL 083.0603	
R689	RL 0,35W 309 OHM+-1%TK50 RESISTOR DRALORIC SMA0207/309OHM-F-D	RL 083.0226	
R690	RL 0,35W 97,6 OHM+-1%TK50 RESISTOR DRALORIC SMA0207/97,6OHM-F-D	RL 082.9771	
R691	RL 0,35W 45,3 OHM+-1%TK50 RESISTOR DRALORIC SMA0207/45,3OHM-F-D	RL 082.9488	
R695	RN 5X 10KOHM+-2%SIL 6 H5 RESISTOR NETWORK BOURNS 4306R-101-103	RN 099.2675	
R696	RN 9X100KOHM+-2%SIL10 H5 RESISTOR NETWORK BOURNS 4310R-101-104	RN 542.5092	
V1	AE BA483 BER.SCH.DIOD.UHF DIODE VALVO BA483	AE 568.2290	
V2	AE BA483 BER.SCH.DIOD.UHF DIODE VALVO BA483	AE 568.2290	
V3	AE BA483 BER.SCH.DIOD.UHF DIODE VALVO BA483	AE 568.2290	
V6	AD 1N4448 75V 0,15A UDI DIODE TEXAS INST 1N4448 GEGURTET	AD 012.0700	
V10	AK BC173C NPN 25V 100MA TRANSISTOR INTERMETAL BC173C	010.4444	
V11	AK BC253C PNP 25V 100MA TRANSISTOR INTERMETAL BC253C	010.2829	
V15	AK BC173C NPN 25V 100MA TRANSISTOR INTERMETAL BC173C	010.4444	
V16	AK BC253C PNP 25V 100MA TRANSISTOR INTERMETAL BC253C	010.2829	
V17	AK BC253C PNP 25V 100MA TRANSISTOR INTERMETAL BC253C	010.2829	

Kennzeichen Component No.	Benennung/Beschreibung Designation	Sachnummer Stock No.	enthalten in contained in
V18	AK BC173C NPN 25V 100MA TRANSISTOR INTERMETAL BC173C	010.4444	
V20	AE BA483 BER.SCH.DIOD.UHF DIODE VALVO BA483	AE 568.2290	
V21	AE BA483 BER.SCH.DIOD.UHF DIODE VALVO BA483	AE 568.2290	
V23	AE BA483 BER.SCH.DIOD.UHF DIODE VALVO BA483	AE 568.2290	
V24	AE BA483 BER.SCH.DIOD.UHF DIODE VALVO BA483	AE 568.2290	
V25	AE BZX79/C5V6 0,5W Z-DI ZENER DIODE VALVO BZX79/C5V6	AE 012.2455	
V26	AE BZX79/C9V1 0,5W Z-DI ZENER DIODE VALVO BZX79/C9V1	AE 012.2503	
V27	AE MA47111 200V PINDI PIN DIODE M/A-COM MA47111	803.0773	
V28	AE 5082-3081 100V PINDI PIN DIODE HEWLETT-P. 5082-3081	803.0780	
V29	AE 5082-3081 100V PINDI PIN DIODE HEWLETT-P. 5082-3081	803.0780	
V32	AK NE85637 NPN 12V 100MA TRANSISTOR NEC NE85637	801.8231	
V40	AK BC253C PNP 25V 100MA TRANSISTOR INTERMETAL BC253C	010.2829	
V41	AD 1N4448 75V 0,15A UDI DIODE TEXAS INST 1N4448 GEGURTET	AD 012.0700	
V65	AE 5082-2804 2XSCHOTTKYDI DIODE HEWLETT-P. 5082-2804	AE 012.8724	
V70	AE 5082-2804 2XSCHOTTKYDI DIODE HEWLETT-P. 5082-2804	AE 012.8724	
V77	AE BZX79/C10 0,5W Z-DI ZENER DIODE VALVO BZX79/C10	AE 012.2510	
V78	AE BZX79/C10 0,5W Z-DI ZENER DIODE VALVO BZX79/C10	AE 012.2510	
V80	AK BC173C NPN 25V 100MA TRANSISTOR INTERMETAL BC173C	010.4444	
V95	AE BZX79/C4V7 0,5W Z-DI ZENER DIODE VALVO BZX79/C4V7	AE 012.2432	

Kennzeichen Component No.	Benennung/Beschreibung Designation	Sachnummer Stock No.	enthalten in contained in
V99	AD 1N4448 75V 0,15A UDI DIODE TEXAS INST 1N4448 GEGURTET	AD 012.0700	
V123	AK BC253C PNP 25V 100MA TRANSISTOR INTERMETAL BC253C	010.2829	
V125	AE BA483 BER.SCH.DIOD.UHF DIODE VALVO BA483	AE 568.2290	
V126	AE BA483 BER.SCH.DIOD.UHF DIODE VALVO BA483	AE 568.2290	
V156	AK BFT66 NPN 15V 30MA TRANSISTOR SIEMENS BFT66	AK 252.5728	
V160	AK BC173C NPN 25V 100MA TRANSISTOR INTERMETAL BC173C	010.4444	
V166	AK BC253C PNP 25V 100MA TRANSISTOR INTERMETAL BC253C	010.2829	
V167	AD 1N4448 75V 0,15A UDI DIODE TEXAS INST 1N4448 GEGURTET	AD 012.0700	
V168	AK BC253C PNP 25V 100MA TRANSISTOR INTERMETAL BC253C	010.2829	
V169	AD 1N4448 75V 0,15A UDI DIODE TEXAS INST 1N4448 GEGURTET	AD 012.0700	
V175	AE BZX79/C9V1 0,5W Z-DI ZENER DIODE VALVO BZX79/C9V1	AE 012.2503	
V200	AE BA483 BER.SCH.DIOD.UHF DIODE VALVO BA483	AE 568.2290	
V205	AL BD139 NPN 80V 1A0 TRANSISTOR VALVO BD139	AL 274.8994	
V220	AD 1N4448 75V 0,15A UDI DIODE TEXAS INST 1N4448 GEGURTET	AD 012.0700	
V222	AE BZX55/B5V1 0,5W Z-DI ZENER DIODE VALVO BZX55/B5V1	AE 262.5837	
V264	AK BC253C PNP 25V 100MA TRANSISTOR INTERMETAL BC253C	010.2829	
V265	AE 5082-2800 SCHOTTKYDI DIODE HEWLETT-P. 5082-2800	AE 012.9066	
V266	AK BC173C NPN 25V 100MA TRANSISTOR INTERMETAL BC173C	010.4444	
V267	AE 5082-2800 SCHOTTKYDI DIODE HEWLETT-P. 5082-2800	AE 012.9066	

Kennzeichen Component No.	Benennung/Beschreibung Designation	Sachnummer Stock No.	enthalten in contained in
V279	AE BZX79/C6V2 0,5W Z-DI ZENER DIODE VALVO BZX79/C6V2	AE 012.2461	
V280	AE BZX79/C4V3 0,5W Z-DI ZENER DIODE VALVO BZX79/C4V3	AE 012.2426	
V281	AE BZX79/C4V3 0,5W Z-DI ZENER DIODE VALVO BZX79/C4V3	AE 012.2426	
V284	AD 1N4448 75V 0,15A UDI DIODE TEXAS INST 1N4448 GEGURTET	AD 012.0700	
V290	AD 1N4448 75V 0,15A UDI DIODE TEXAS INST 1N4448 GEGURTET	AD 012.0700	
V351	AK BC253C PNP 25V 100MA TRANSISTOR INTERMETAL BC253C	010.2829	
V352	AE BZX55/B5V1 0,5W Z-DI ZENER DIODE VALVO BZX55/B5V1	AE 262.5837	
V353	AE BZX55/B5V1 0,5W Z-DI ZENER DIODE VALVO BZX55/B5V1	AE 262.5837	
V354	AD 1N4448 75V 0,15A UDI DIODE TEXAS INST 1N4448 GEGURTET	AD 012.0700	
V355	AE BZX55/B5V1 0,5W Z-DI ZENER DIODE VALVO BZX55/B5V1	AE 262.5837	
V356	AE BZX55/B5V1 0,5W Z-DI ZENER DIODE VALVO BZX55/B5V1	AE 262.5837	
V365	AE BZX55/B5V1 0,5W Z-DI ZENER DIODE VALVO BZX55/B5V1	AE 262.5837	
V366	AE BZX55/B5V1 0,5W Z-DI ZENER DIODE VALVO BZX55/B5V1	AE 262.5837	
V405	AE BZX55/B5V1 0,5W Z-DI ZENER DIODE VALVO BZX55/B5V1	AE 262.5837	
V406	AE BZX55/B5V1 0,5W Z-DI ZENER DIODE VALVO BZX55/B5V1	AE 262.5837	
V415	AE BZX55/B5V1 0,5W Z-DI ZENER DIODE VALVO BZX55/B5V1	AE 262.5837	
V416	AE BZX55/B5V1 0,5W Z-DI ZENER DIODE VALVO BZX55/B5V1	AE 262.5837	
V425	AE BZX55/B5V1 0,5W Z-DI ZENER DIODE VALVO BZX55/B5V1	AE 262.5837	
V426	AE BZX55/B5V1 0,5W Z-DI ZENER DIODE VALVO BZX55/B5V1	AE 262.5837	

Kennzeichen Component No.	Benennung/Beschreibung Designation	Sachnummer Stock No.	enthalten in contained in
V435	AE BZX55/B5V1 0,5W Z-DI ZENER DIODE VALVO BZX55/B5V1	AE 262.5837	
V436	AE BZX55/B5V1 0,5W Z-DI ZENER DIODE VALVO BZX55/B5V1	AE 262.5837	
V445	AE BZX55/B5V1 0,5W Z-DI ZENER DIODE VALVO BZX55/B5V1	AE 262.5837	
V446	AE BZX55/B5V1 0,5W Z-DI ZENER DIODE VALVO BZX55/B5V1	AE 262.5837	
V448	AE BZX55/B5V1 0,5W Z-DI ZENER DIODE VALVO BZX55/B5V1	AE 262.5837	
V449	AE BZX55/B5V1 0,5W Z-DI ZENER DIODE VALVO BZX55/B5V1	AE 262.5837	
V472	AE BZX55/B5V1 0,5W Z-DI ZENER DIODE VALVO BZX55/B5V1	AE 262.5837	
V475	AE BZX79/C6V8 0,5W Z-DI ZENER DIODE VALVO BZX79/C6V8	AE 012.2478	
V476	AK BC173C NPN 25V 100MA TRANSISTOR INTERMETAL BC173C	010.4444	
V510	AF HLMP1200 LED RT RD3 LED HEWLETT 5082-4487	AF 273.0448	
V660	AE BZX79/C10 0,5W Z-DI ZENER DIODE VALVO BZX79/C10	AE 012.2510	
V661	AE BZX79/C10 0,5W Z-DI ZENER DIODE VALVO BZX79/C10	AE 012.2510	
V674	AK BC550B NPN 50V 100MA TRANSISTOR SIEMENS BC550B GURT,POL.CBE	AK 007.2050	
W1	DX HF-KABEL RF CABLE	802.8512	
W2	DX HF-KABEL RF CABLE	802.8535	
W3	DX HF-KABEL RF CABLE	802.8558	
W4	DX HF-KABEL RF CABLE	802.8570	
X1	FP STECKERL.INDIR.64POLIG 64-PIN INSERT PANDUIT 100-064-033/999	FP 084.6470	
X10	FP INDIREKT.STECKERL.36P. PIN CONNECTOR BERG 75160-102-36	FP 242.3600	

Kennzeichen Component No.	Benennung/Beschreibung Designation	Sachnummer Stock No.	enthalten in contained in
X22	FP INDIREKT.STECKERL.36P. PIN CONNECTOR BERG 75160-102-36	FP 242.3600	
X23	FP INDIREKT.STECKERL.36P. PIN CONNECTOR BERG 75160-102-36 2X3POL.	FP 242.3600	
X24	FP INDIREKT.STECKERL.36P. PIN CONNECTOR BERG 75160-102-36	FP 242.3600	
X30	FP INDIREKT.STECKERL.36P. PIN CONNECTOR BERG 75160-102-36	FP 242.3600	
X31	FP INDIREKT.STECKERL.36P. PIN CONNECTOR BERG 75160-102-36 4X2POL.	FP 242.3600	
X601	FJ EINBAUSTECKER SYST.SMB ANGLE CONNECTOR ROSENBERG R&S-ZCHNG.602.8804	FJ 602.8804	
X602	FJ EINBAUSTECKER SYST.SMB FIXED PLUG RADIALL R.114 554	FJ 063.5139	
X603	FJ EINBAUSTECKER SYST.SMB FIXED PLUG RADIALL R.114 554	FJ 063.5139	
X604	FJ EINBAUSTECKER SYST.SMB ANGLE CONNECTOR ROSENBERG R&S-ZCHNG.602.8804	FJ 602.8804	
X605	FJ EINBAUSTECKER SYST.SMB ANGLE CONNECTOR ROSENBERG R&S-ZCHNG.602.8804	FJ 602.8804	
X606	FJ EINBAUSTECKER SYST.SMB ANGLE CONNECTOR ROSENBERG R&S-ZCHNG.602.8804	FJ 602.8804	
X607	FJ EINBAUSTECKER SYST.SMB ANGLE CONNECTOR ROSENBERG R&S-ZCHNG.602.8804	FJ 602.8804	
X608	FJ EINBAUWINKELST. SMC ANGLE CONNECTOR RADIALL R 112 669	FJ 249.9684	
X609	FJ EINBAUSTECKER SYST.SMB ANGLE CONNECTOR ROSENBERG R&S-ZCHNG.602.8804	FJ 602.8804	
X610	FJ EINBAUSTECKER SYST.SMB ANGLE CONNECTOR ROSENBERG R&S-ZCHNG.602.8804	FJ 602.8804	
Z1	LD 10GHZ 50DB100V10A4RDX9 LEAD THROUGH FILTER ERIE R&S-ZCHNG.451.4636	LD 451.4636	
Z2	LD 10GHZ 50DB100V10A4RDX9 LEAD THROUGH FILTER ERIE R&S-ZCHNG.451.4636	LD 451.4636	
Z5	LD 10GHZ 50DB100V10A4RDX9 LEAD THROUGH FILTER ERIE R&S-ZCHNG.451.4636	LD 451.4636	

Kennzeichen Component No.	Benennung/Beschreibung Designation	Sachnummer Stock No.	enthalten in contained in
Z20	LD 10GHZ 50DB100V10A4RDX9 LEAD THROUGH FILTER ERIE R&S-ZCHNG.451.4636	LD 451.4636	
Z25	LD 10GHZ 50DB100V10A4RDX9 LEAD THROUGH FILTER ERIE R&S-ZCHNG.451.4636	LD 451.4636	
Z26	LD 10GHZ 50DB100V10A4RDX9 LEAD THROUGH FILTER ERIE R&S-ZCHNG.451.4636	LD 451.4636	
Z30	LD 10GHZ 50DB100V10A4RDX9 LEAD THROUGH FILTER ERIE R&S-ZCHNG.451.4636	LD 451.4636	
Z50	LD 10GHZ 50DB100V10A4RDX9 LEAD THROUGH FILTER ERIE R&S-ZCHNG.451.4636	LD 451.4636	
Z101	LD 10GHZ 50DB100V10A4RDX9 LEAD THROUGH FILTER ERIE R&S-ZCHNG.451.4636	LD 451.4636	
Z102	LD 10GHZ 50DB100V10A4RDX9 LEAD THROUGH FILTER ERIE R&S-ZCHNG.451.4636	LD 451.4636	
Z103	LD 10GHZ 50DB100V10A4RDX9 LEAD THROUGH FILTER ERIE R&S-ZCHNG.451.4636	LD 451.4636	
			- ENDE -

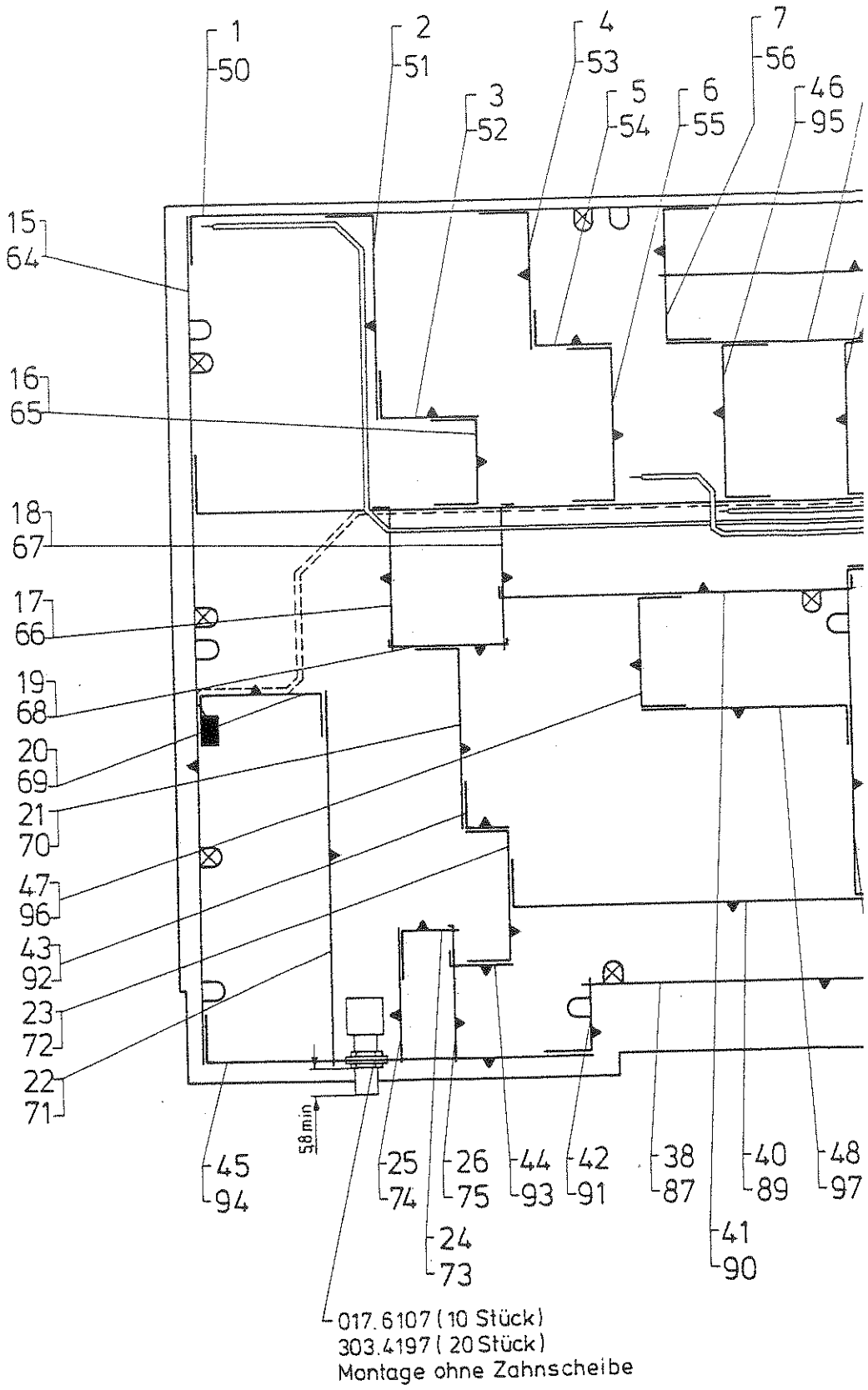
1
50
2
51
3
52
4
53
5
54
6
55
7
56
46
95
15
64
16
65
18
67
17
66
19
68
20
69
21
70
47
96
43
92
23
72
22
71
5,8 min
45
94
25
74
26
75
24
73
44
93
42
91
38
87
41
90
40
89
48
97
017.6107 (10 Stück)
303.4197 (20 Stück)
Montage ohne Zahnscheibe

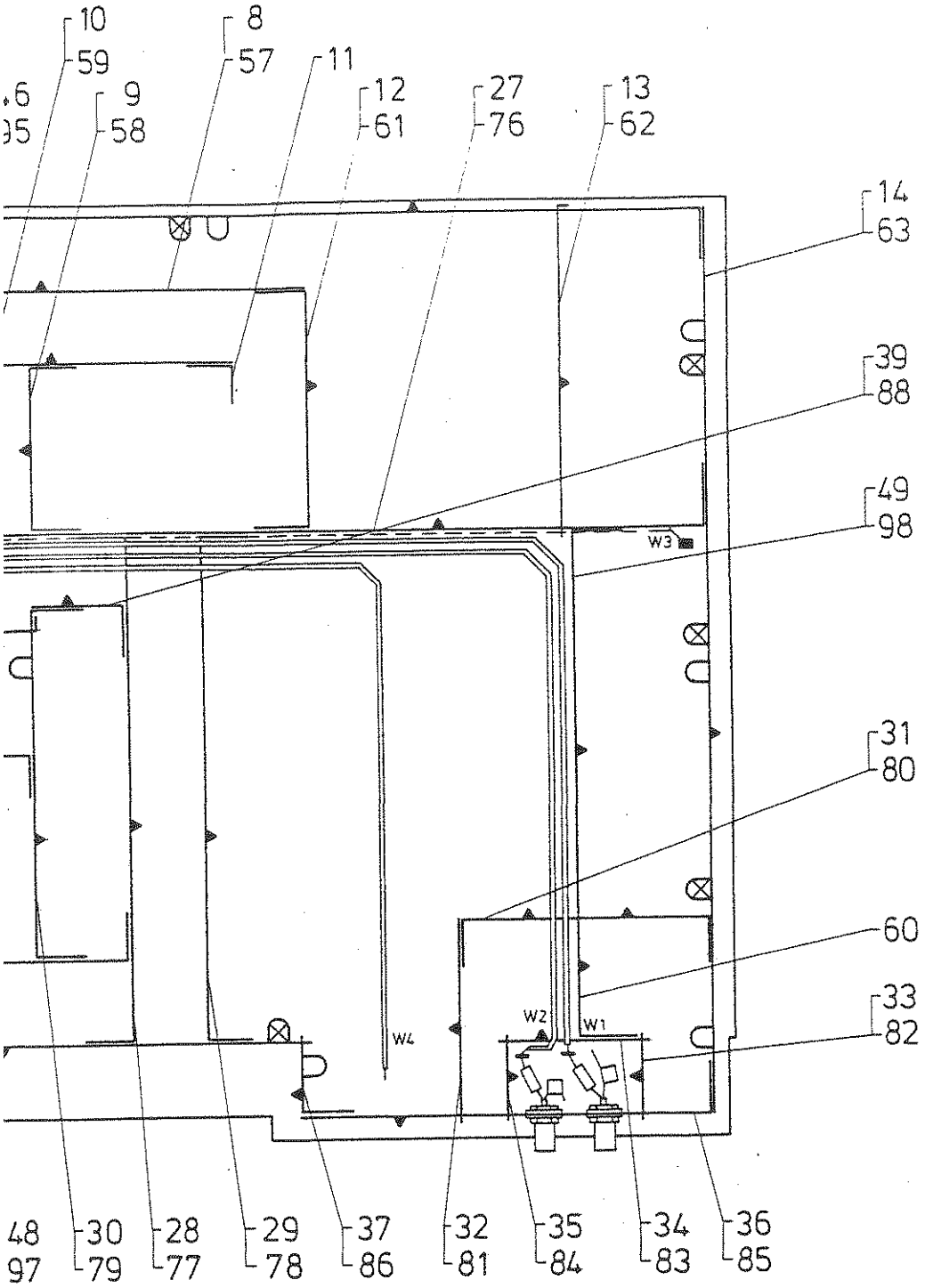

VS 078.2224 (22 Stück)

0 1 2 3 4 5

VERKLEINERUNG

Achtung! MOS-Bauteile
Caution. MOS components

Maße ohne Toleranzangabe		Maßstab 1 : 1	
		Halbzeug, Werkstoff	
TKSA	Tag	Name	Benennung
Bearb	6.87	BT	Analogteil Analog section
Geor			Z
Norm			
ROHDE & SCHWARZ			Zeichn. Nr. 802.8435.01
			Blatt Nr. 3
CMT			802.2014 V

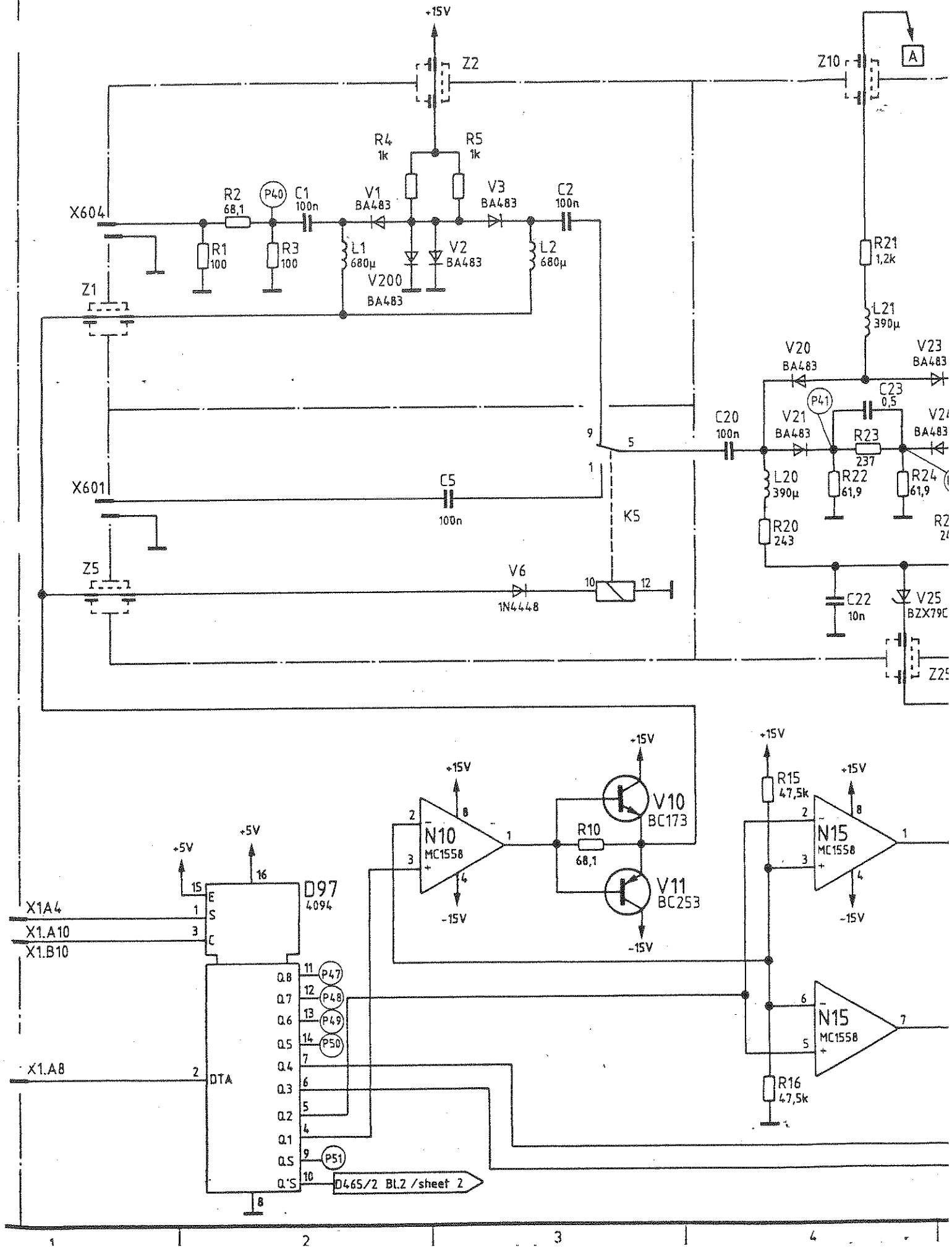
+15V
Z2
Z10
A
R4
1k
R5
1k
X604
R2
68,1
P40
C1
100n
V1
BA483
V3
BA483
C2
100n
R1
100
R3
100
L1
680µ
V200
BA483
V2
BA483
L2
680µ
Z1
R21
1,2k
L21
390µ
V20
BA483
V23
BA483
C23
0,5
P41
C20
100n
V21
BA483
R23
237
V24
BA483
L20
390µ
R22
61,9
R24
61,9
R20
243
X601
C5
100n
K5
Z5
V6
1N4448
C22
10n
V25
BZX79C
Z25
+5V
+5V
D97
4094
X1A4
X1.A10
X1.B10
X1.A8
DTA
Q.8
Q.7
Q.6
Q.5
Q.4
Q.3
Q.2
Q.1
Q.S
Q.'S
P47
P48
P49
P50
P51
D465/2 Bl.2 /sheet 2
+15V
N10
MC1558
-15V
R10
68,1
V10
BC173
V11
BC253
R15
47,5k
N15
MC1558
R16
47,5k

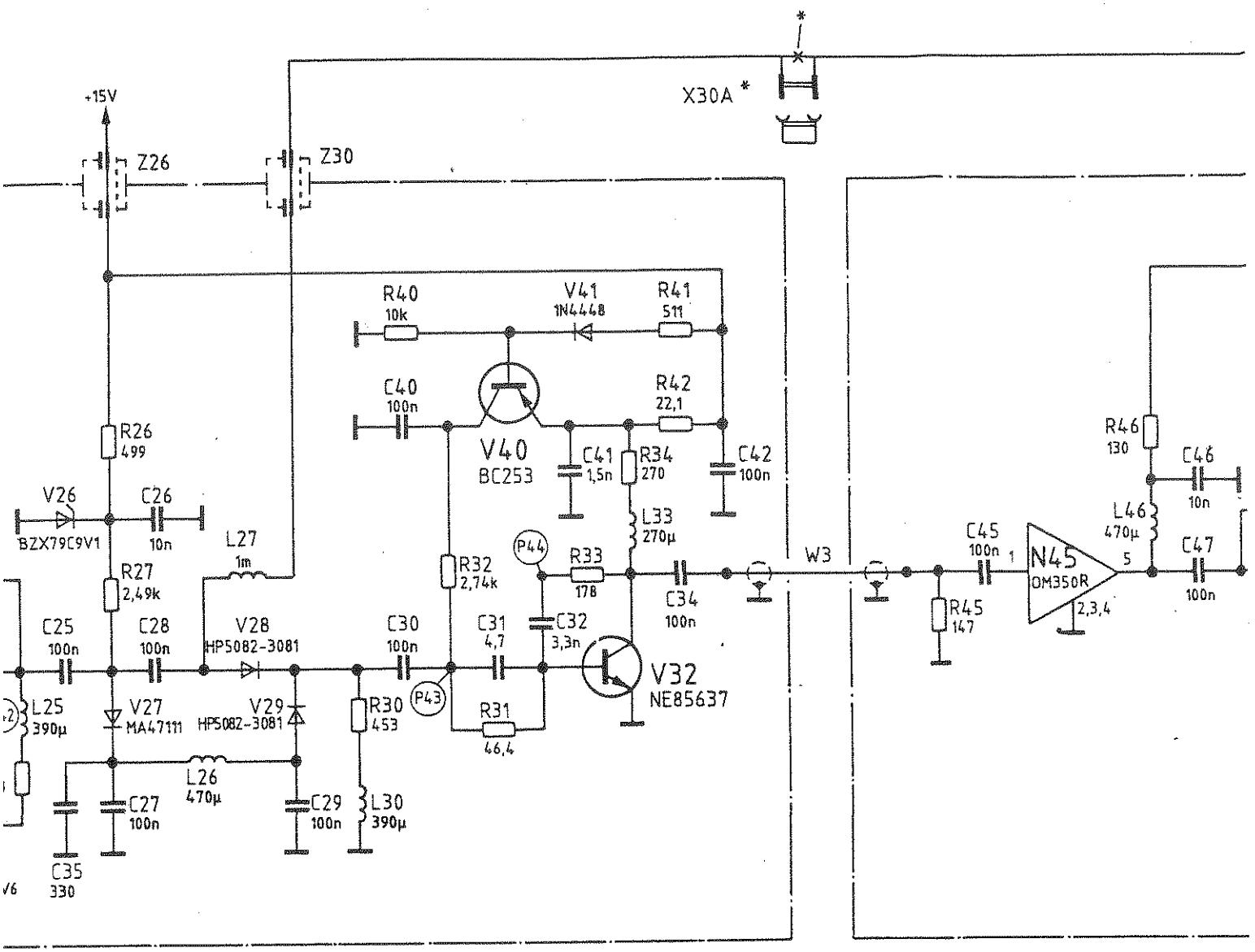

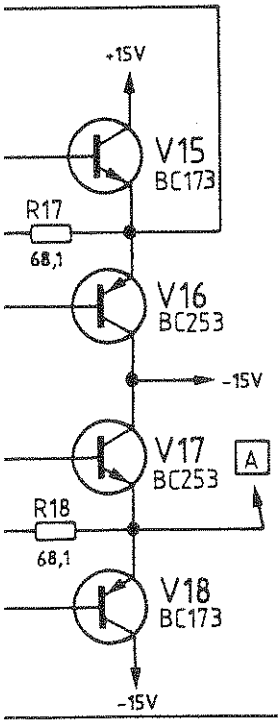

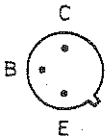

V10,V11,V15
V16,V17,V18
V40,V80

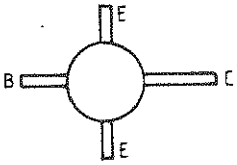

V32

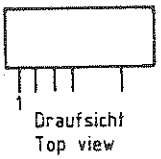

N45,N50
N55

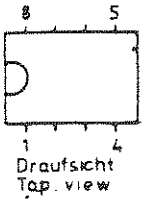

N10,N15
N70,N90

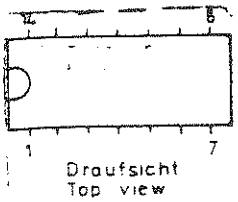

D96

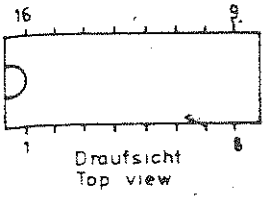

D76,D97

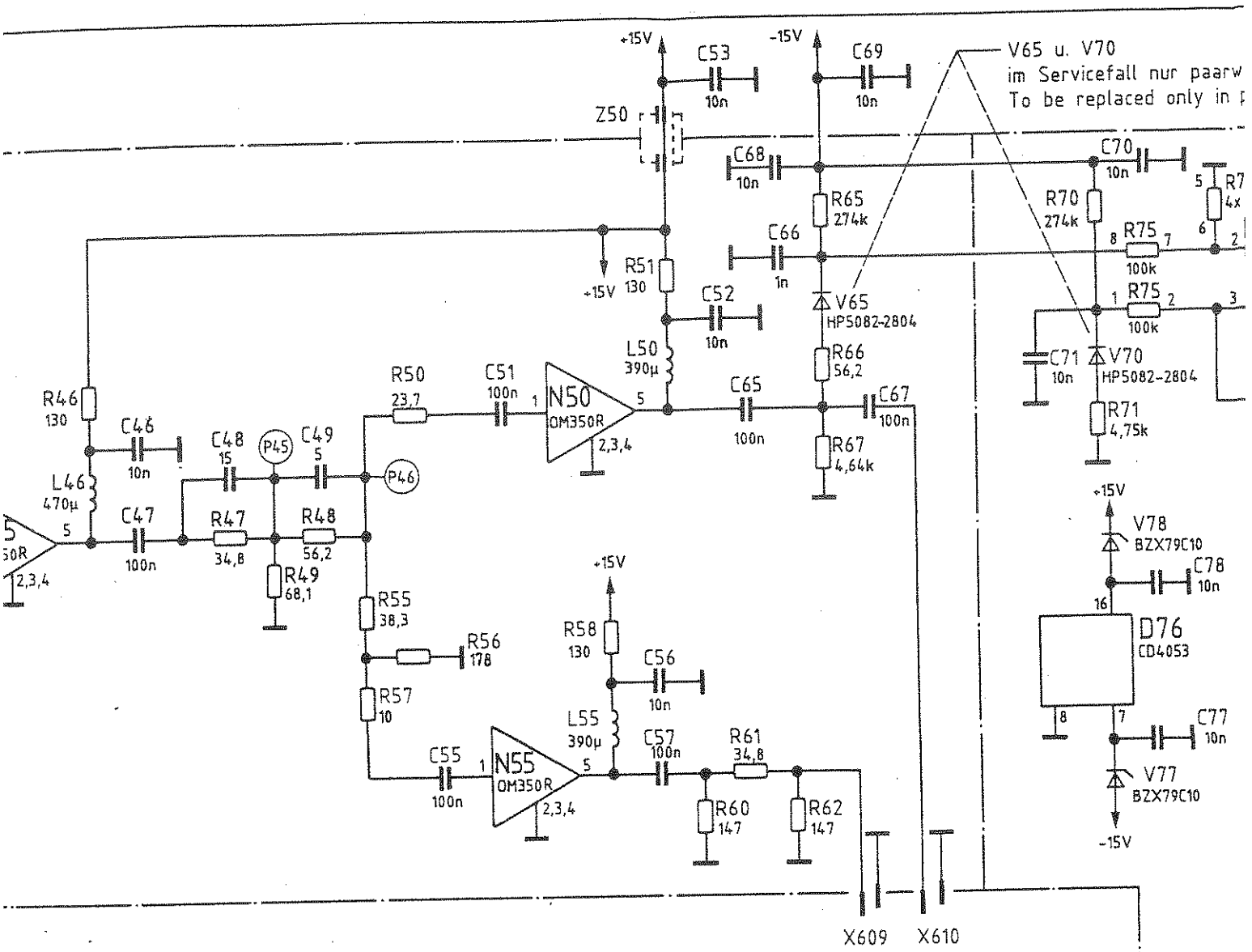

N10,N15
N70,N90

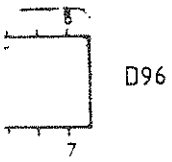

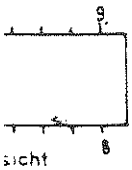

Klebekante für Druckerzeugnis, durch diese Zone möglichst nur Leitungen führen

aarweise austauschen
/ in pairs

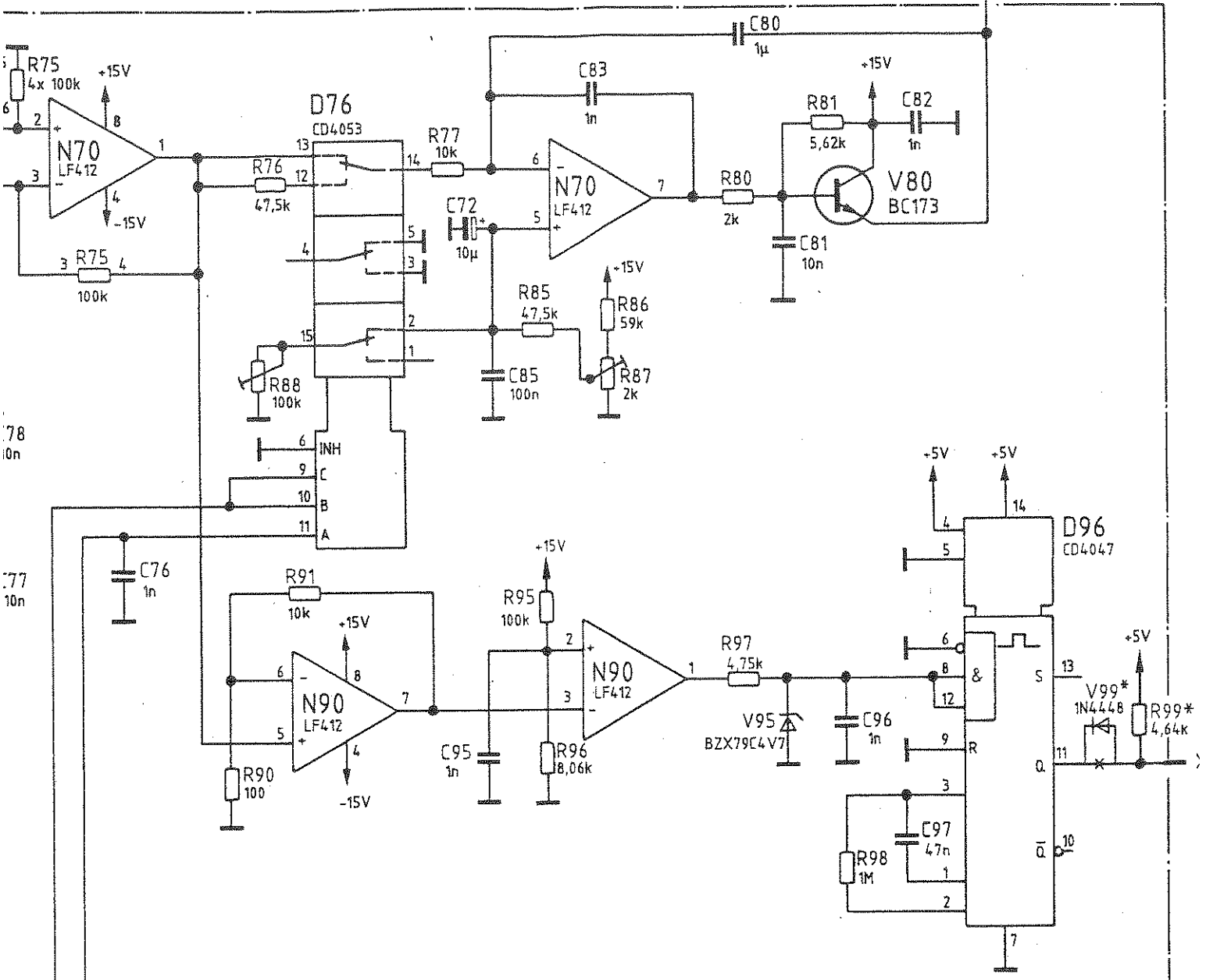

*) nur für VAR 04, 06
only for model 04, 06

Stromlauf gilt für VAR 02, 04, 06,08
Circuit diagram is valid for model 02, 04, 06,08

Stromlauf zu	Analogteil / Analog section	Z	Zeichn.-Nr. 802.8435 S
CMT	reg. i V. 802.2020 V	erste Z. 802.2066	

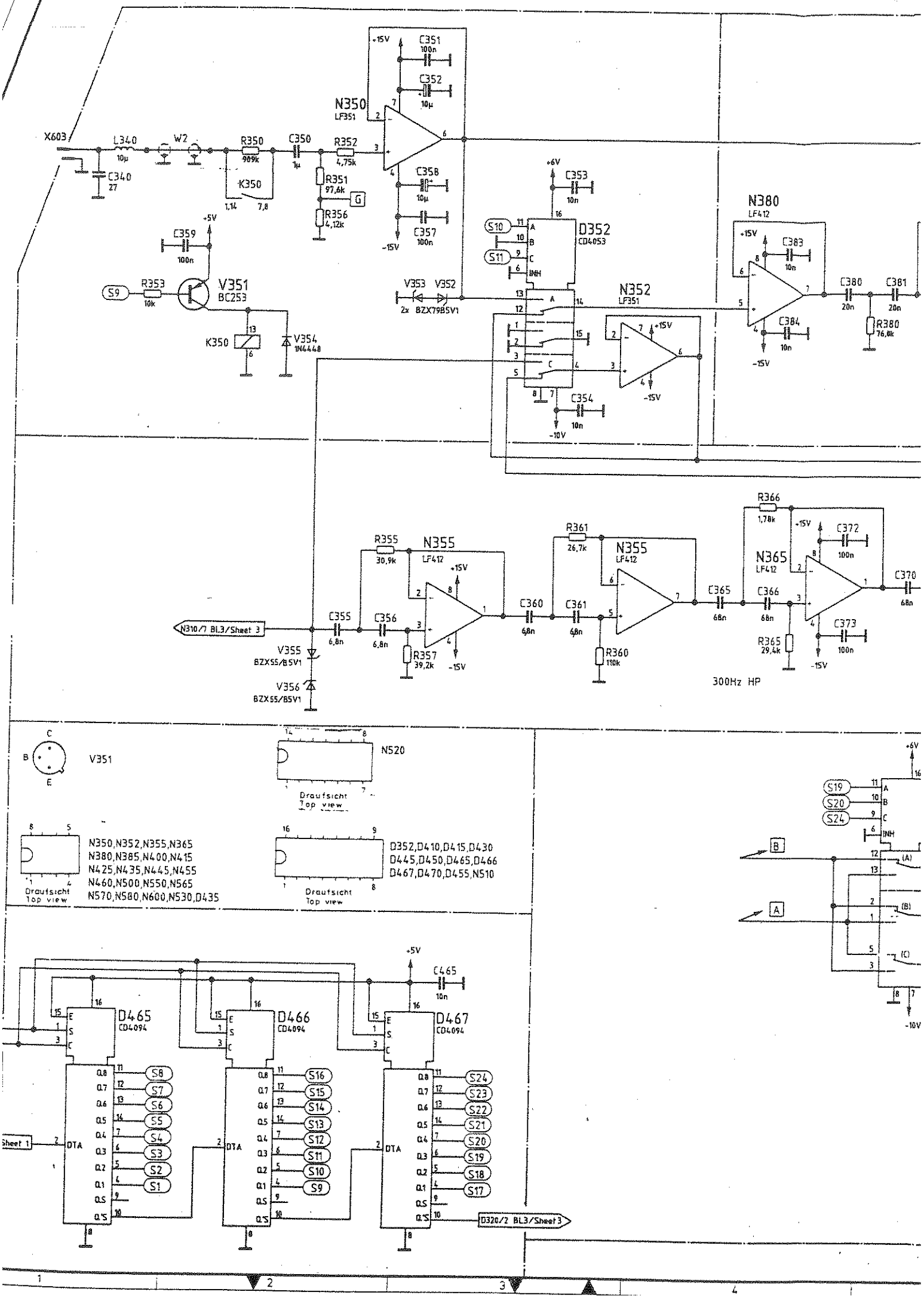
X603
L340
10µ
W2
C340
27
R350
909k
K350
1,14
7,8
C350
1µ
R352
4,75k
R351
97,6k
R356
4,12k
G
N350
LF351
C351
100n
C352
10µ
C358
10µ
C357
100n
+15V
-15V
C359
100n
+5V
S9
R353
10k
V351
BC253
K350
V354
1N4448
V353
V352
2x BZX79B5V1
+6V
C353
10n
S10
S11
D352
CD4053
INH
N352
LF351
C354
10n
-10V
N380
LF412
C383
10n
C384
10n
C380
20n
C381
20n
R380
76,8k
R355
30,9k
N355
LF412
C355
6,8n
C356
6,8n
R357
39,2k
N310/7 BL3/Sheet 3
V355
BZX55/B5V1
V356
BZX55/B5V1
C360
6,8n
R361
26,7k
N355
LF412
C361
6,8n
R360
110k
C365
68n
R366
1,78k
N365
LF412
C366
68n
R365
29,4k
C372
100n
C373
100n
C370
68n
300Hz HP
V351
N520
Draufsicht
Top view
N350,N352,N355,N365
N380,N385,N400,N415
N425,N435,N445,N455
N460,N500,N550,N565
N570,N580,N600,N530,D435
D352,D410,D415,D430
D445,D450,D465,D466
D467,D470,D455,N510
S19
S20
S24
B
A
(A)
(B)
(C)
C465
10n
D465
CD4094
D466
CD4094
D467
CD4094
DTA
S8
S7
S6
S5
S4
S3
S2
S1
S16
S15
S14
S13
S12
S11
S10
S9
S24
S23
S22
S21
S20
S19
S18
S17
Sheet 1
D320/2 BL3/Sheet 3

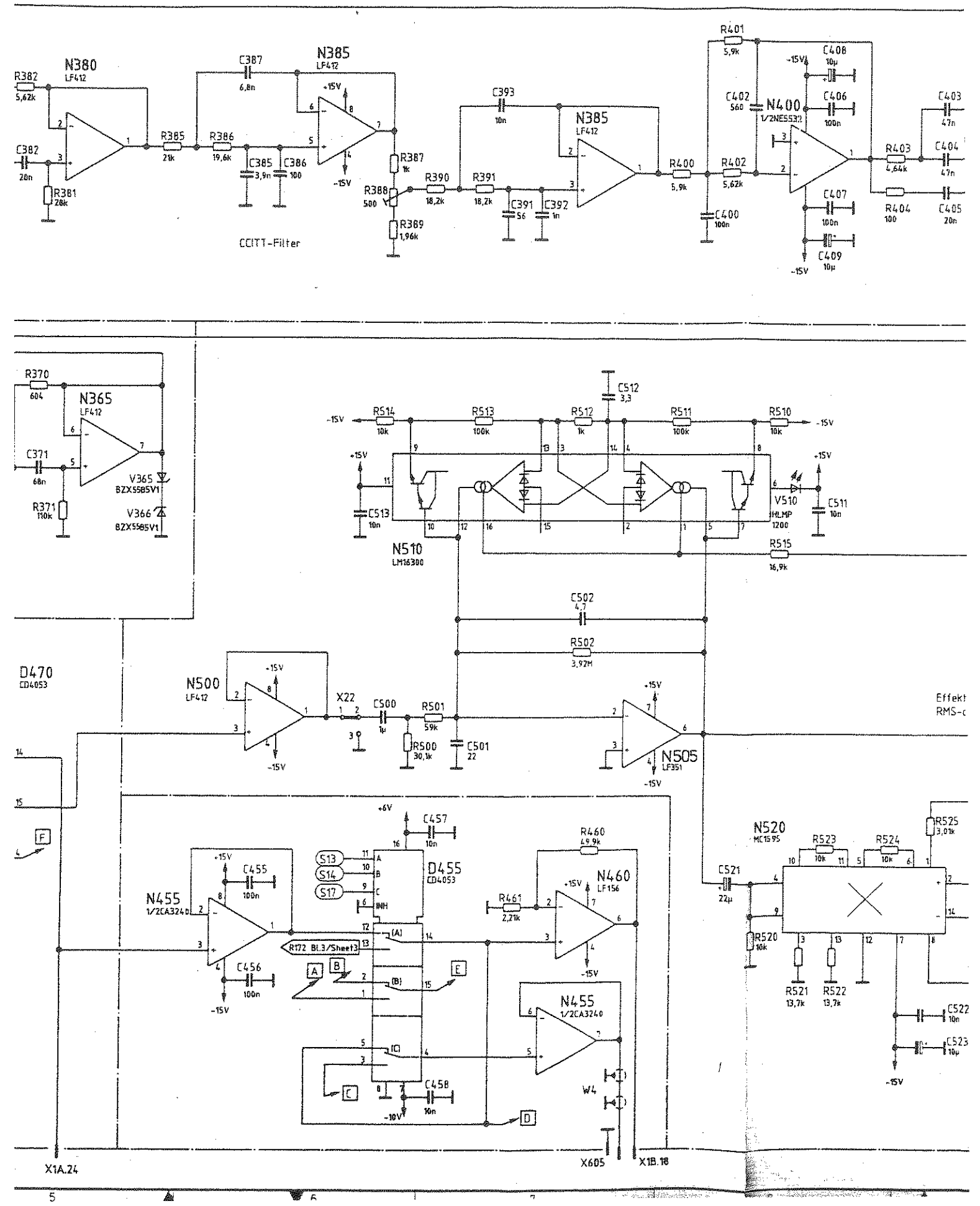
N380
LF412
R382
5,62k
C382
20n
R381
20k
R385
21k
R386
19,6k
C387
6,8n
C385
3,9n
C386
100
N385
LF412
+15V
-15V
R387
1k
R388
500
R389
1,96k
R390
18,2k
R391
18,2k
C391
56
C392
1n
C393
10n
N385
LF412
R400
5,9k
C400
100n
R401
5,9k
C402
560
R402
5,62k
C408
10µ
C406
100n
N400
1/2NE5532
C407
100n
C409
10µ
R403
4,64k
R404
100
C403
47n
C404
47n
C405
20n
CCITT-Filter
R370
604
N365
LF412
C371
68n
R371
110k
V365
BZX5585V1
V366
BZX5585V1
C512
3,3
R514
10k
R513
100k
R512
1k
R511
100k
R510
10k
C513
10n
N510
LM16300
V510
HLMP
1200
C511
10n
R515
16,9k
C502
4,7
R502
3,92M
D470
CD4053
N500
LF412
X22
C500
1µ
R501
59k
R500
30,1k
C501
22
N505
LF351
Effekt
RMS-
C457
10n
D455
CD4053
S13
S14
S17
INH
R460
49,9k
N460
LF156
R461
2,21k
N455
1/2CA3240
C455
100n
C456
100n
R172 Bl.3/Sheet3
N455
1/2CA3240
C458
10n
-10V
W4
N520
MC1595
R523
10k
R524
10k
R525
3,01k
C521
22µ
R520
10k
R521
13,7k
R522
13,7k
C522
10n
C523
10µ
X1A.24
X605
X1B.18

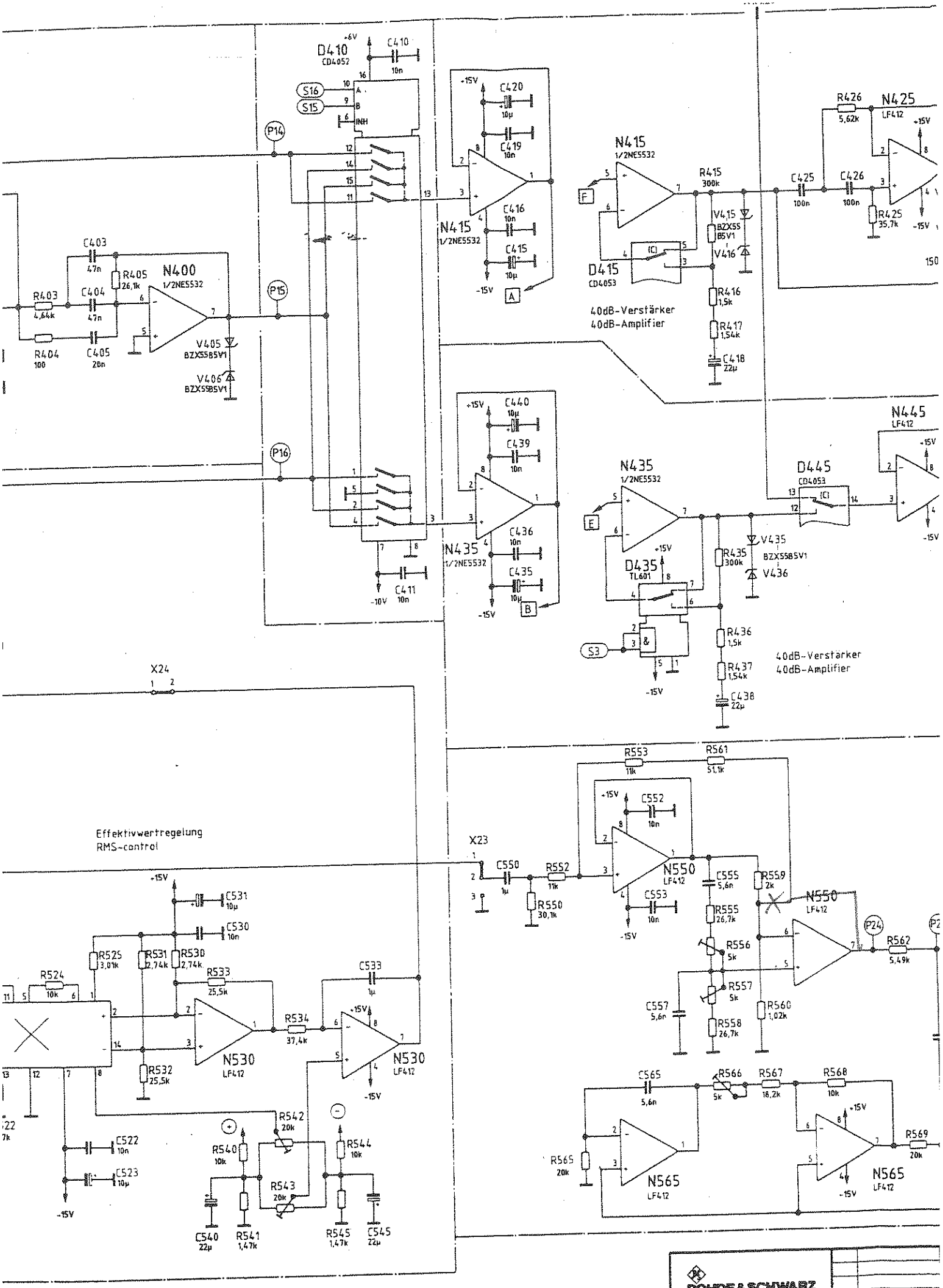
D410
CD4052
C410
10n
S16
S15
INH
P14
P15
P16
C420
10µ
C419
10n
C416
10n
C415
10µ
N415
1/2NE5532
A
N415
1/2NE5532
R415
300k
V415
BZX55
B5V1
V416
D415
CD4053
R416
1,5k
R417
1,54k
C418
22µ
40dB-Verstärker
40dB-Amplifier
R426
5,62k
N425
LF412
C425
100n
C426
100n
R425
35,7k
C403
47n
R405
26,1k
N400
1/2NE5532
R403
4,64k
C404
47n
R404
100
C405
20n
V405
BZX55B5V1
V406
BZX55B5V1
C440
10µ
C439
10n
C436
10n
C435
10µ
N435
1/2NE5532
B
C411
10n
N435
1/2NE5532
E
D435
TL601
S3
R435
300k
V435
BZX55B5V1
V436
R436
1,5k
R437
1,54k
C438
22µ
40dB-Verstärker
40dB-Amplifier
D445
CD4053
N445
LF412
X24
Effektivwertregelung
RMS-control
X23
C550
1µ
R552
11k
R550
30,1k
R553
11k
R561
51,1k
C552
10n
N550
LF412
C553
10n
C555
5,6n
R555
26,7k
R556
5k
R557
5k
C557
5,6n
R558
26,7k
R559
2k
N550
LF412
R560
1,02k
P24
R562
5,49k
C565
5,6n
R566
5k
R567
18,2k
R568
10k
R565
20k
N565
LF412
R569
20k
N565
LF412
C531
10µ
C530
10n
R525
3,01k
R531
2,74k
R530
2,74k
R524
10k
R533
25,5k
C533
1µ
R534
37,4k
N530
LF412
R532
25,5k
N530
LF412
R542
20k
R540
10k
R544
10k
R543
20k
C522
10n
C523
10µ
C540
22µ
R541
1,47k
R545
1,47k
C545
22µ
ROHDE&SCHWARZ
Änderungs-Mitteilung
9
10
11
12

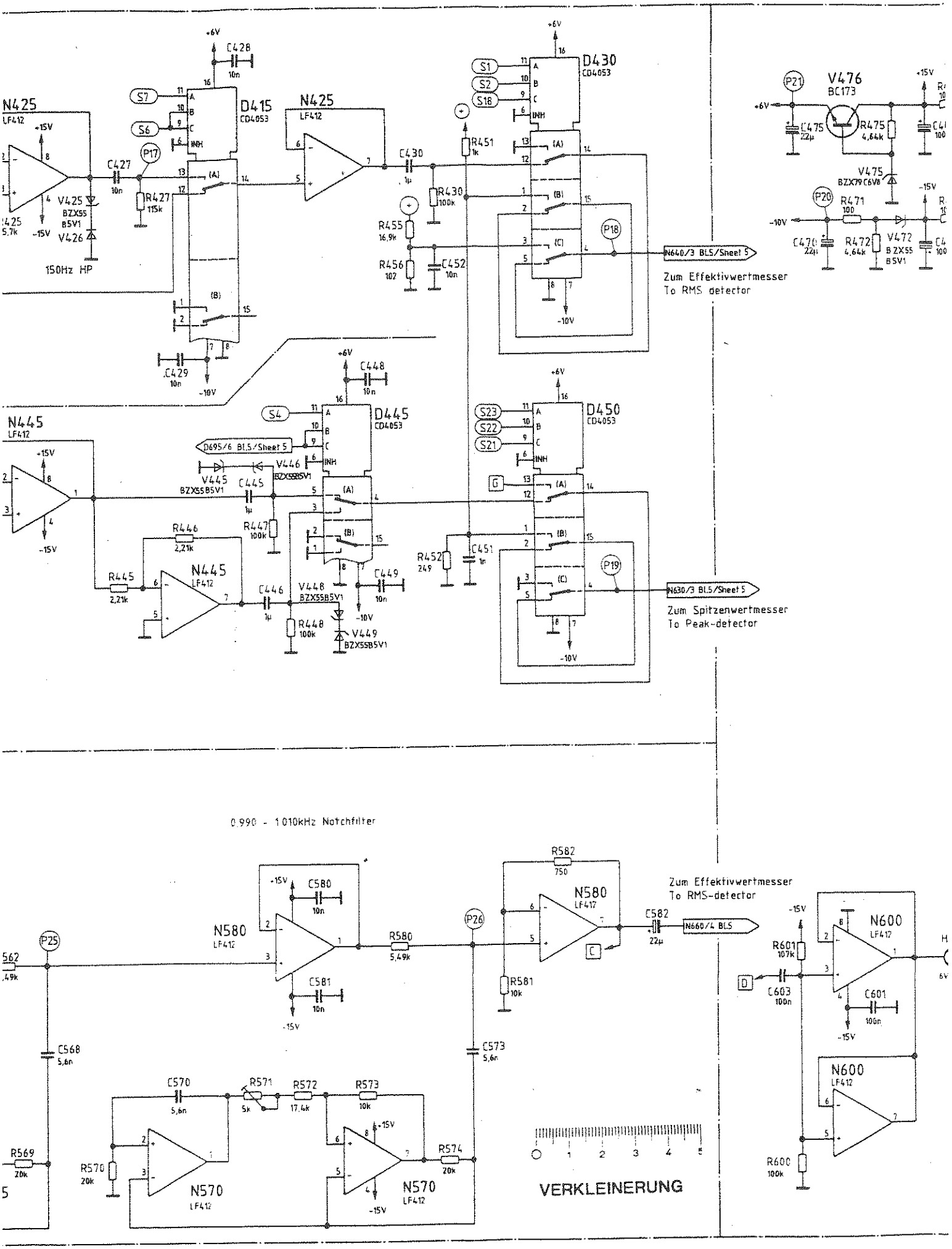

												1KGA	Tag	Name	Benennung		Zeichn.-Nr.		
												Bearb	5.85	BT	Analogteil / Analog section	Z	802.8435		
												Gepr							
												Norm			zu Serg. EMT		Rec. 802.2020 V		
ungs-Nr.	Datum	Name	Ers.	Änderungs-Nr.	Datum	Name													

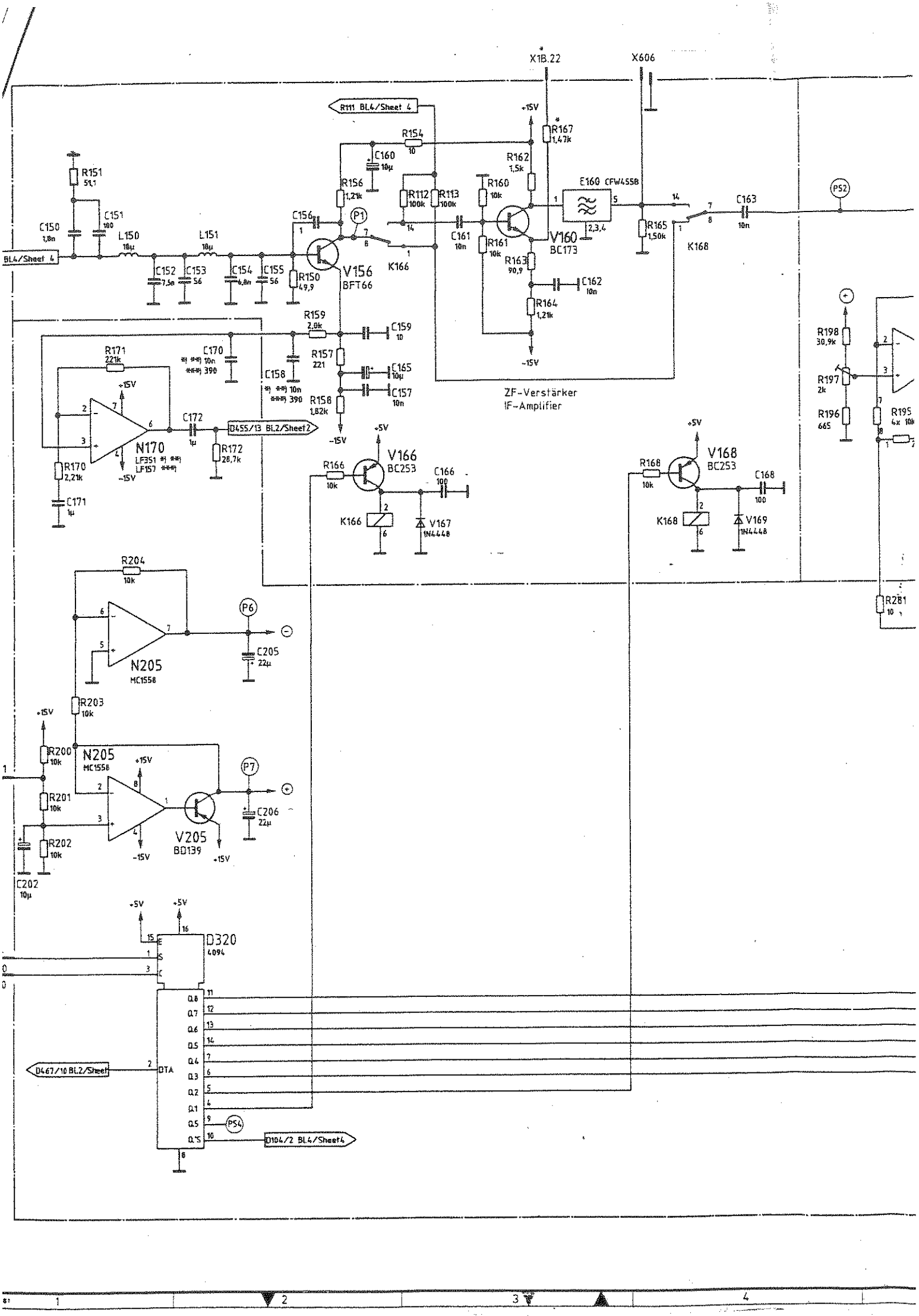
X1B.22
X606
R111 BL4/Sheet 4
+15V
R167 1,47k
R154 10
C160 10µ
R162 1,5k
R151 59,1
R156 1,21k
R112 100k
R113 100k
R160 10k
E160 CFW455B
C163 10n
PS2
C150 1,8n
C151 100
L150 10µ
L151 10µ
C156
P1
C161 10n
V160 BC173
R165 1,50k
K168
BL4/Sheet 4
C152 7,5n
C153 56
C154 6,8n
C155 56
R150 49,9
V156 BFT66
K166
R161 10k
R163 90,9
C162 10n
R164 1,21k
-15V
R159 2,0k
C159 10
R171 221k
C170 10n *) **) 390
C158 10n *) **) 390
R157 221
C165 10µ
C157 10n
R158 1,82k
ZF-Verstärker
IF-Amplifier
R198 30,9k
R197 2k
R196 665
R195 4x 10k
R281 10
+5V
C172 1µ
D455/13 BL2/Sheet2
R172 28,7k
N170 LF351 *) **) LF157 ***)
R170 2,21k
C171 1µ
V166 BC253
R166 10k
C166 100
K166
V167 1N4448
V168 BC253
R168 10k
C168 100
K168
V169 1N4448
R204 10k
P6
N205 MC1558
C205 22µ
R203 10k
R200 10k
R201 10k
R202 10k
C202 10µ
N205 MC1558
P7
C206 22µ
V205 BD139
D320 4094
D467/10 BL2/Sheet
DTA
PS4
D104/2 BL4/Sheet4

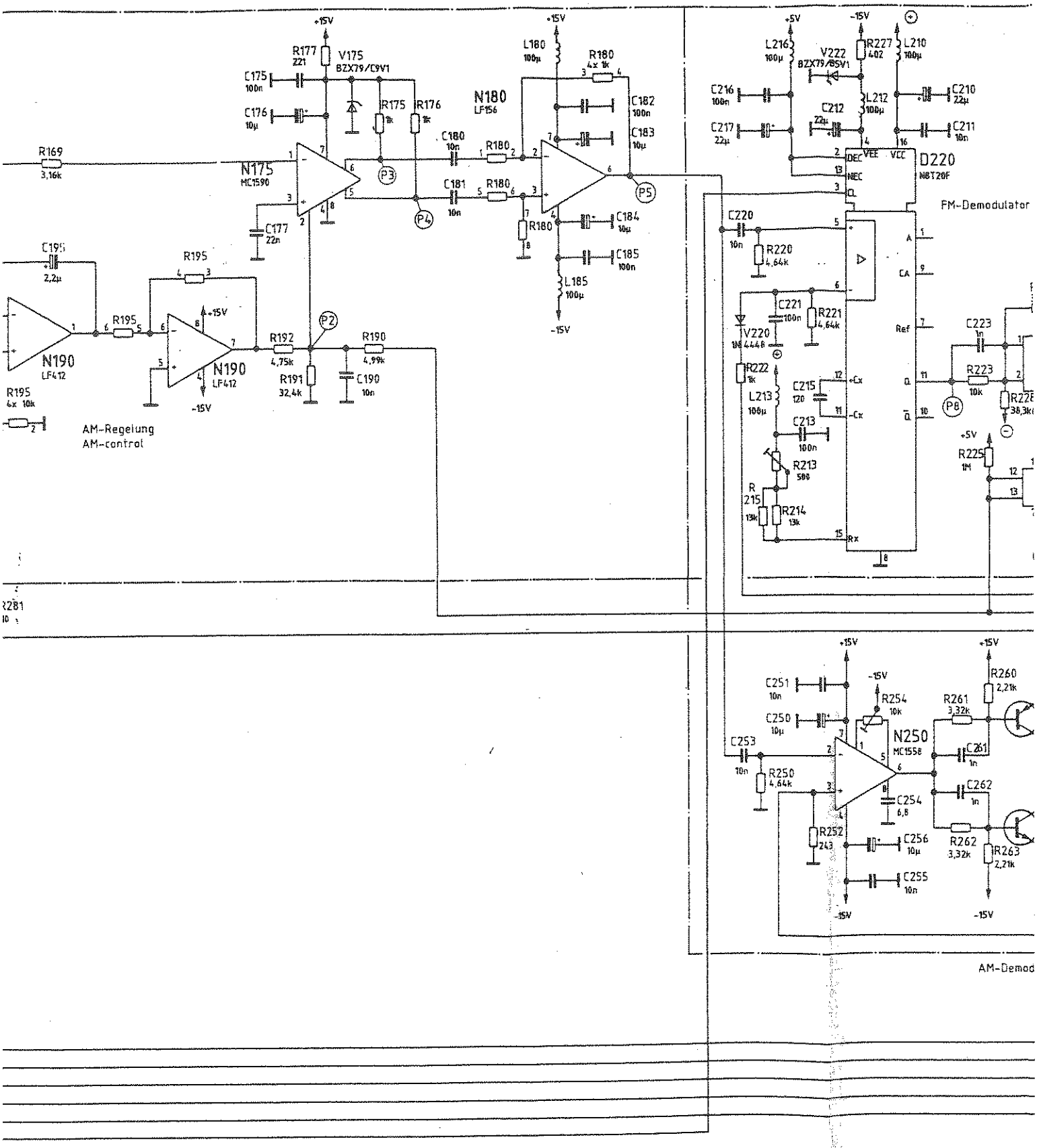
N175
MC1590
N180
LF156
N190
LF412
N190
LF412
D220
NBT20F
N250
MC1558
V175
BZX79/C9V1
V222
BZX79/B5V1
V220
1N4448
FM-Demodulator
AM-Regelung
AM-control
AM-Demod
+15V
-15V
+5V
-5V
P2
P3
P4
P5
P8

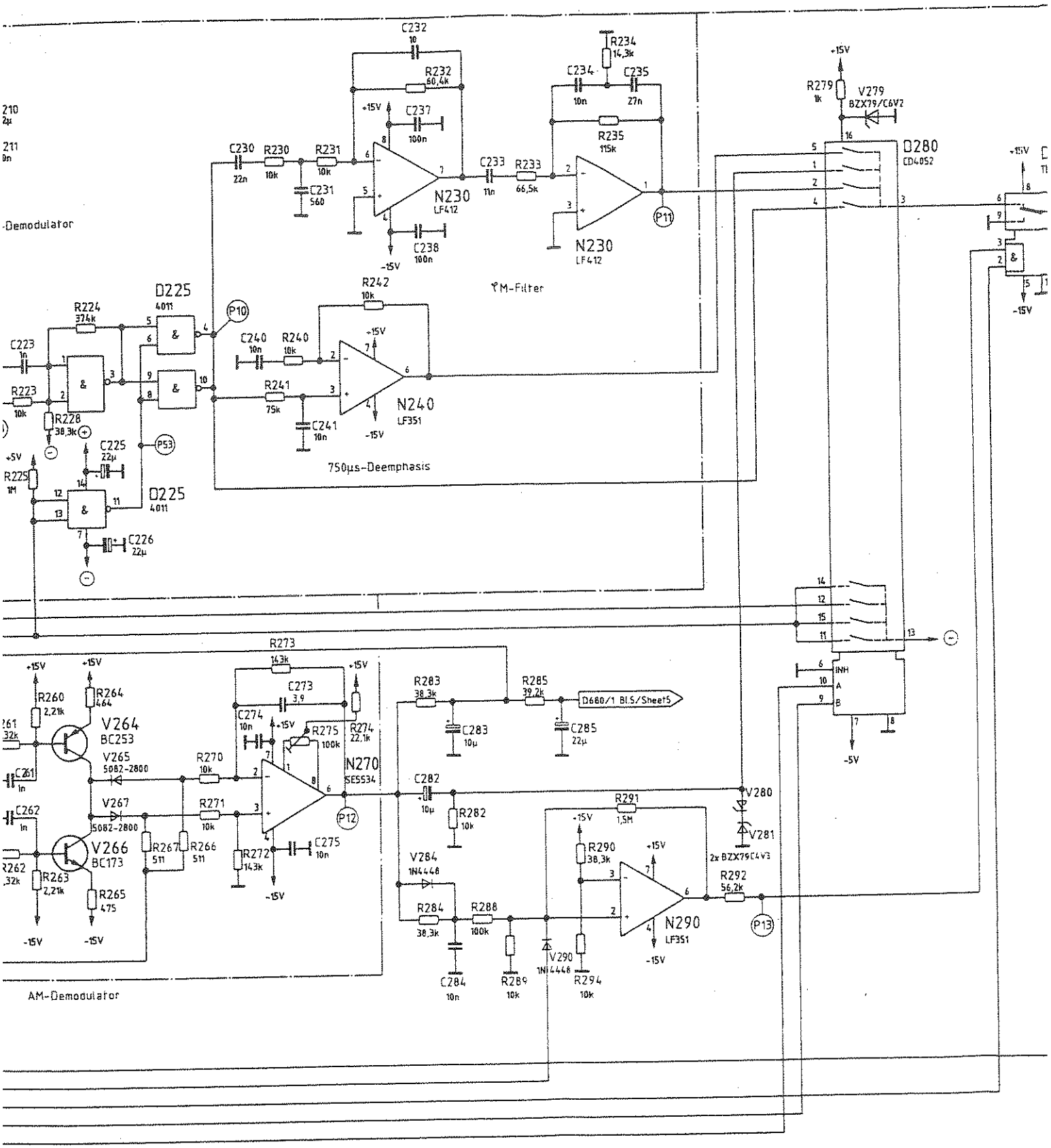

ROHDE & SCHWARZ

A 38 951

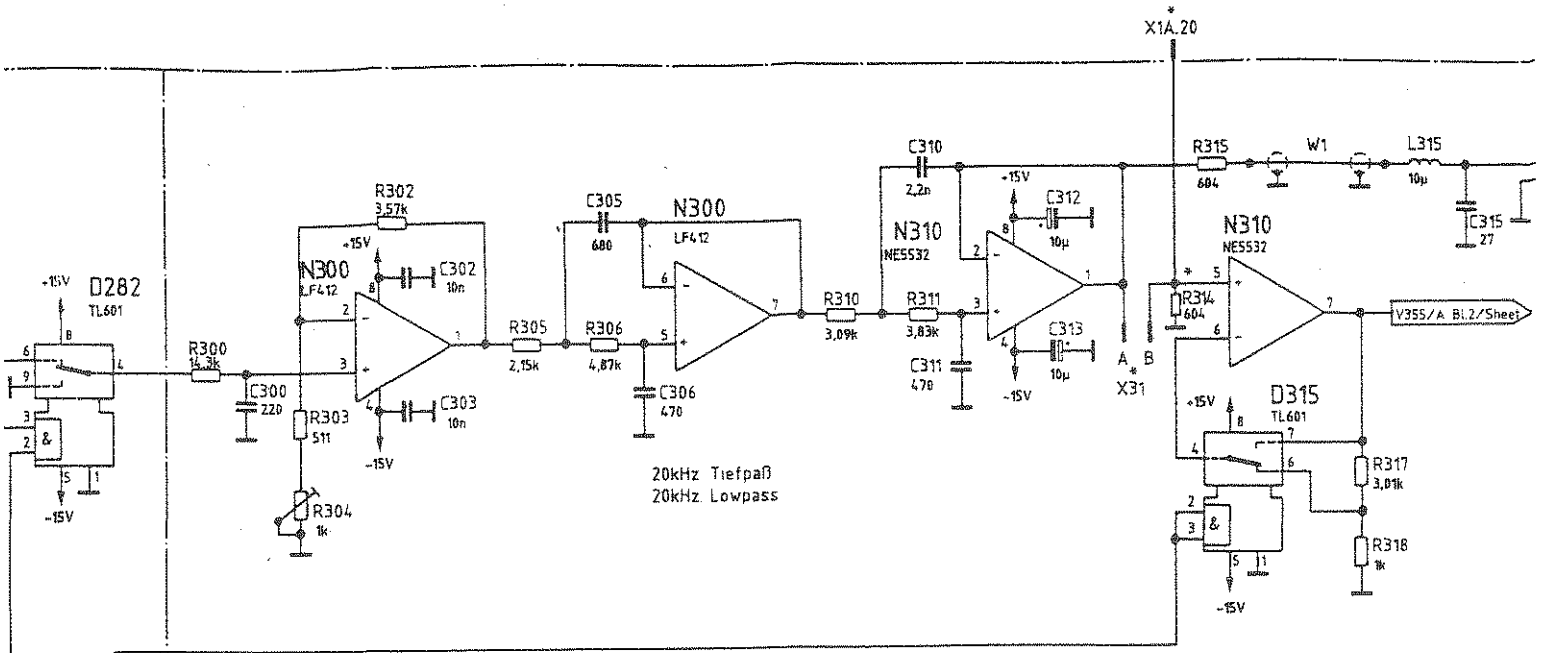

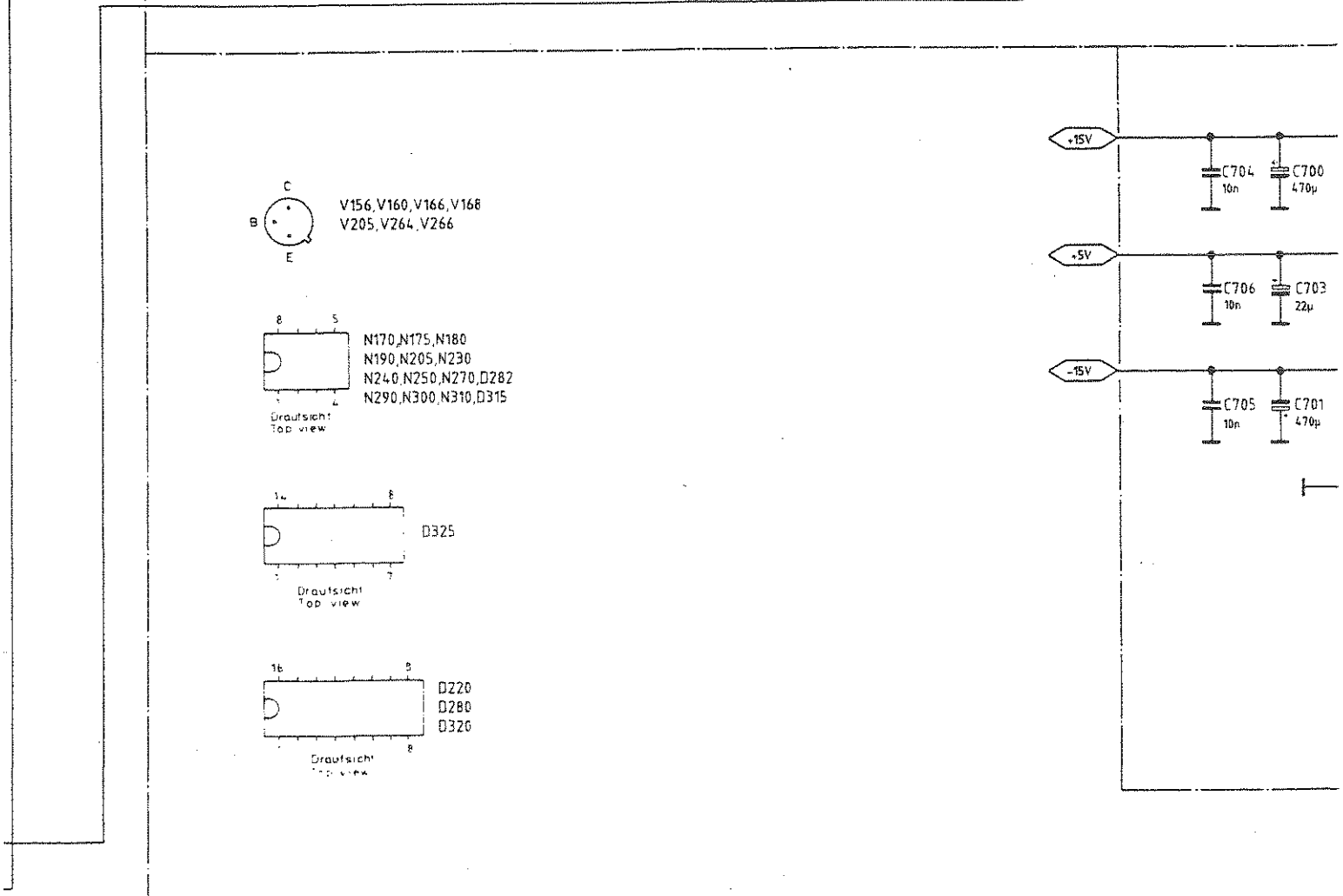

*) nur für VAR 04
only for model 04

**) nur für VAR 02.08
only for model 02 08

***) nur für VAR 06
only for model 06

VERKLE

	09.87	lb					IKGA	Tag	Name	Benennung	Zeichn.-Nr.
							Bearb.	5.85	BT	Analogteil / Analog section	802.8435 S
							Geprüft				
Datum	Name	Änd.	Änderungs Beschreibung	Datum	Name		Norm				

Z

Schnitt: CMT

Ersatz für: 802 2020 V

13 14 15

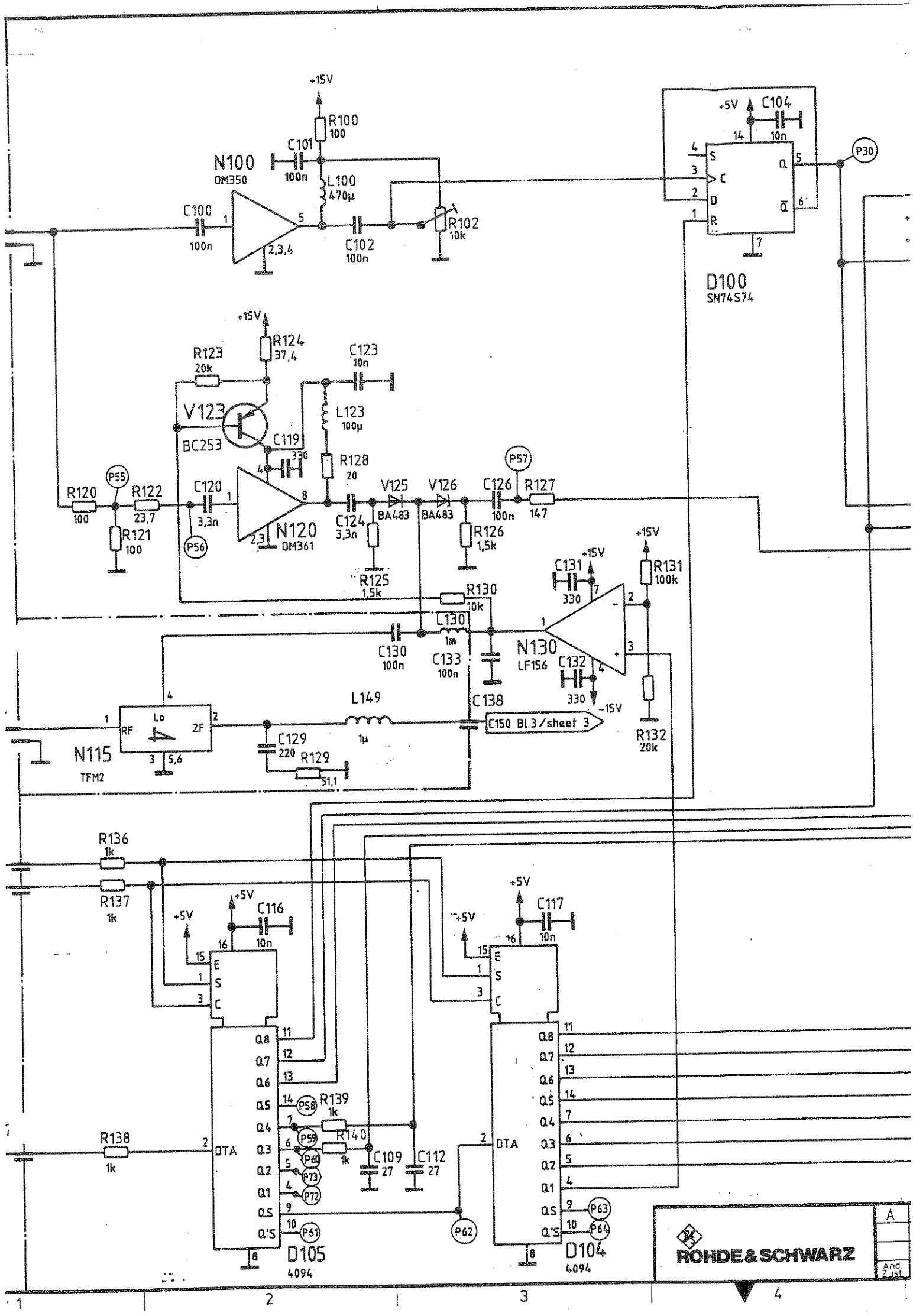
+15V
R100
100
C101
100n
N100
OM350
L100
470µ
C100
100n
C102
100n
R102
10k
+5V
C104
10n
P30
D100
SN74S74
R124
37,4
R123
20k
C123
10n
V123
BC253
L123
100µ
C119
330
R128
20
P55
P57
R120
100
R122
23,7
C120
3,3n
V125
BA483
V126
BA483
C126
100n
R127
147
R121
100
P56
N120
OM361
C124
3,3n
R126
1,5k
R125
1,5k
R130
10k
C131
330
R131
100k
L130
1m
C130
100n
C133
100n
N130
LF156
C132
330
-15V
R132
20k
L149
1µ
C138
C150 Bl.3/sheet 3
N115
TFM2
RF
Lo
ZF
C129
220
R129
51,1
R136
1k
R137
1k
C116
10n
C117
10n
R139
1k
R140
1k
R138
1k
C109
27
C112
27
DTA
D105
4094
D104
4094
P58
P59
P60
P73
P72
P61
P62
P63
P64
ROHDE&SCHWARZ
A
Änd. Zust.
1
2
3
4

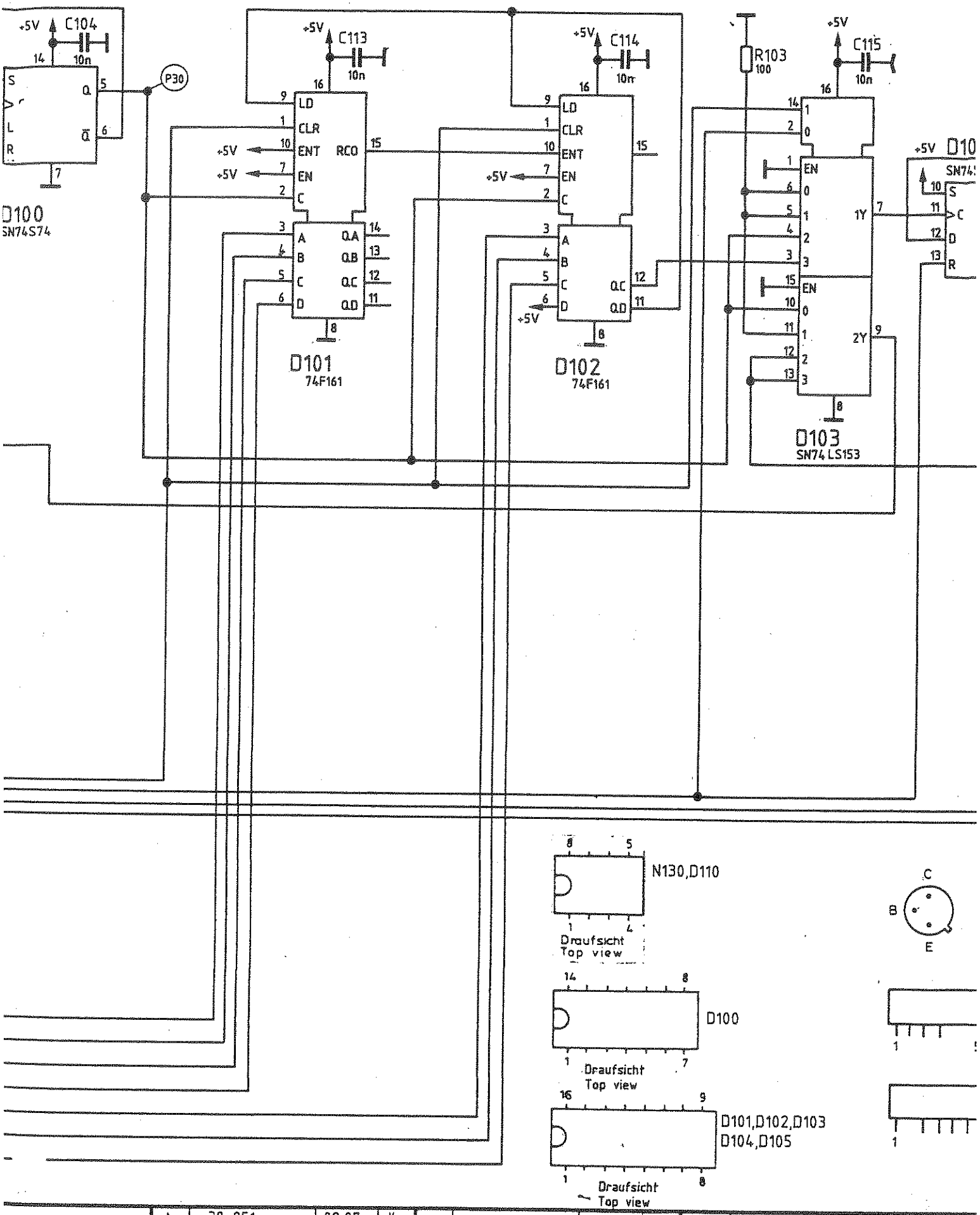

	A	38 951	09.87	lb					1KGA	Tag	Name
									Bearb.	4.85	BT
									Gepr.		
	And. Zust.	Änderungs-Mitteilung	Datum	Name	And. Zust.	Änderungs-Mitteilung	Datum	Name	Norm		

E&SCHWARZ

Benennu

4 5 6 7

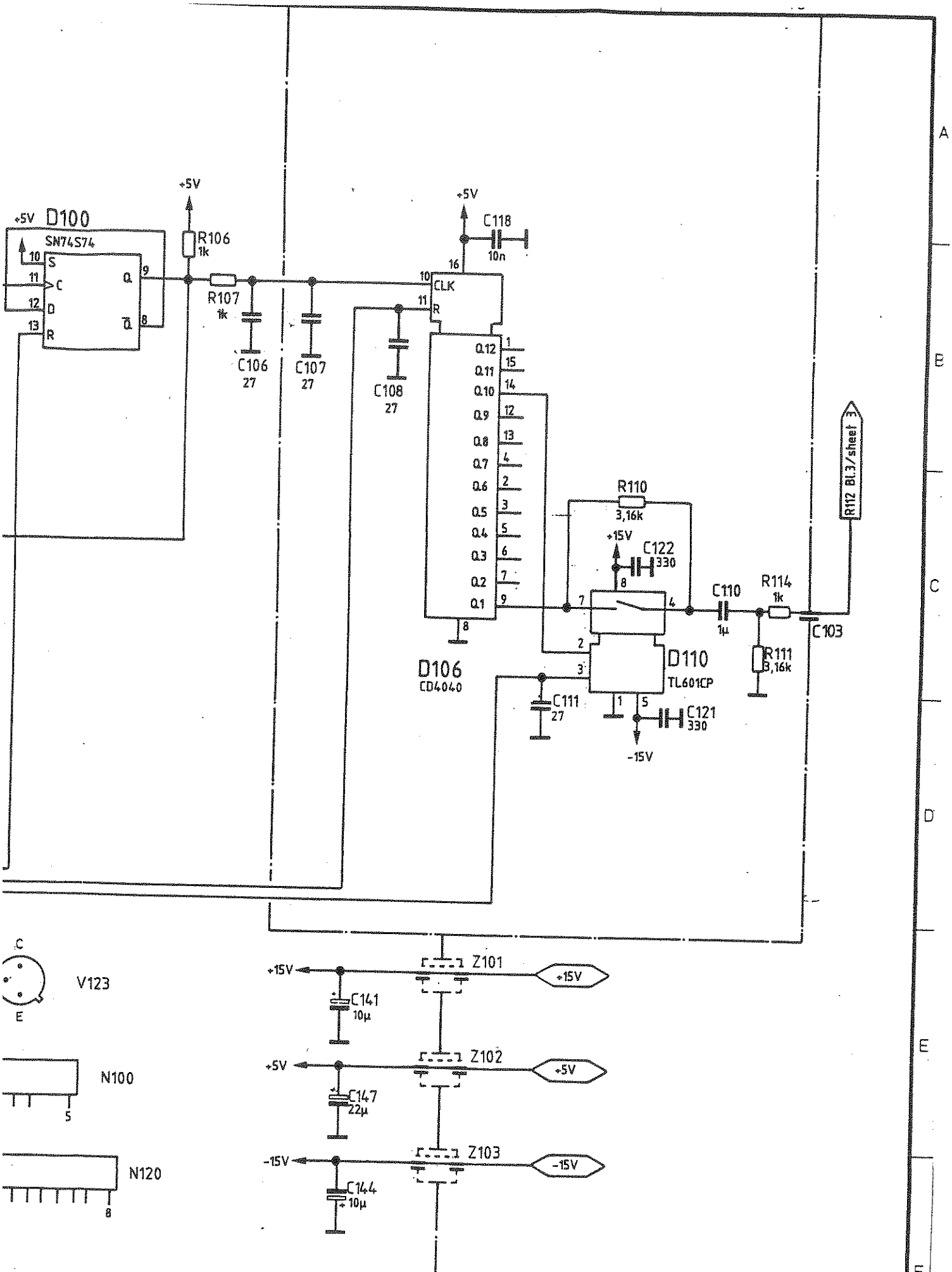

Benennung		Zeichn.-Nr.	Blatt-Nr.
Analogteil / Analog section	Z	802.8435 S	4
zu Gerat: CMT		reg. i. V. 802.2020 V	erste Z. 802.2066

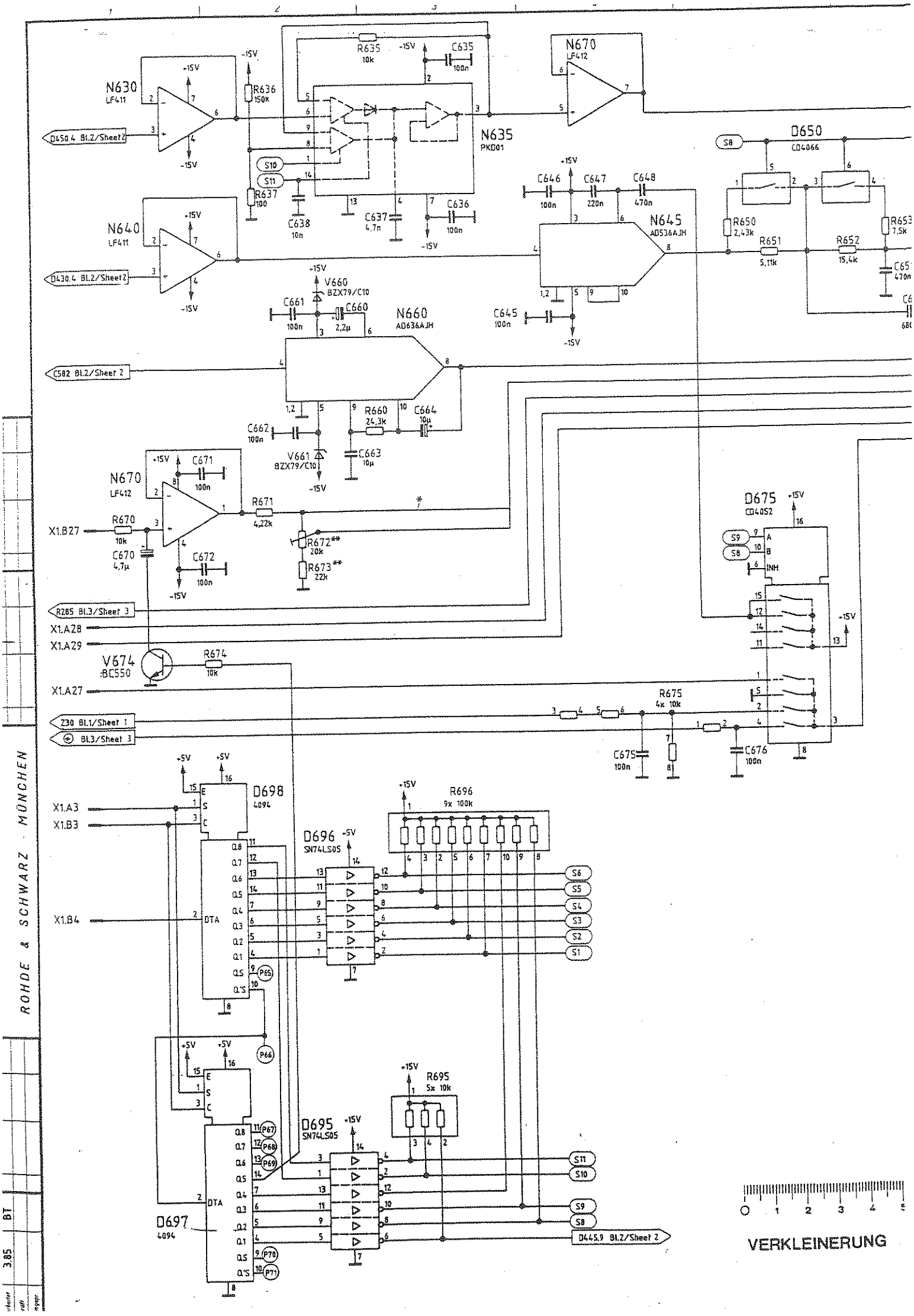
N630
LF411
N640
LF411
N635
PKD01
N670
LF412
N645
AD536AJH
N660
AD636AJH
D650
CD4066
D675
CD4052
D698
4094
D697
4094
D696
SN74LS05
D695
SN74LS05
R696
9x 100k
R695
5x 10k
D450.4 Bl.2/Sheet2
D430.4 Bl.2/Sheet2
C582 Bl.2/Sheet 2
R285 Bl.3/Sheet 3
Z30 Bl.1/Sheet 1
Bl.3/Sheet 3
D445.9 Bl.2/Sheet 2
X1.B27
X1.A28
X1.A29
X1.A27
X1.A3
X1.B3
X1.B4
V674
BC550
V660
BZX79/C10
V661
BZX79/C10
VERKLEINERUNG
ROHDE & SCHWARZ · MÜNCHEN
3.85
BT

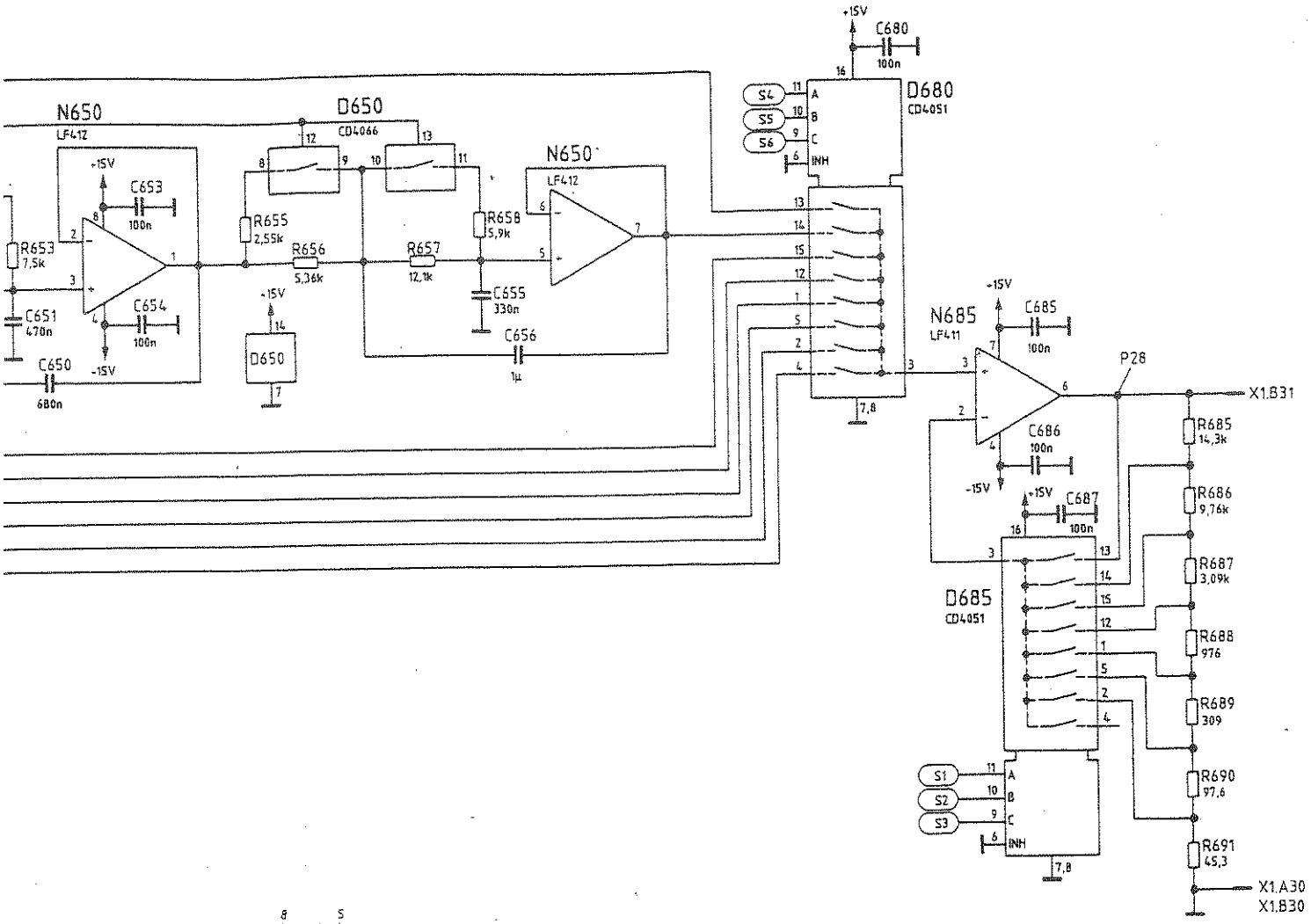

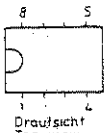

N630,N640
N650,N670
N685

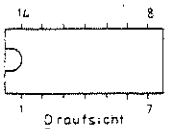

N635,D650,
D695,D696

D675,D680
D685,D697
D698

N645,N660

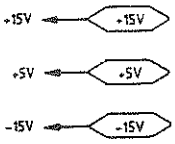

*) nur für VAR 04
only for model 04

**) nur für VAR 02,08
only for model 02,08

Stromlauf zu	Analogteil / Analog section	Z	Zeichn. Nr. 802.8435 S	Bl. 5
			802.2020 V	802.2066

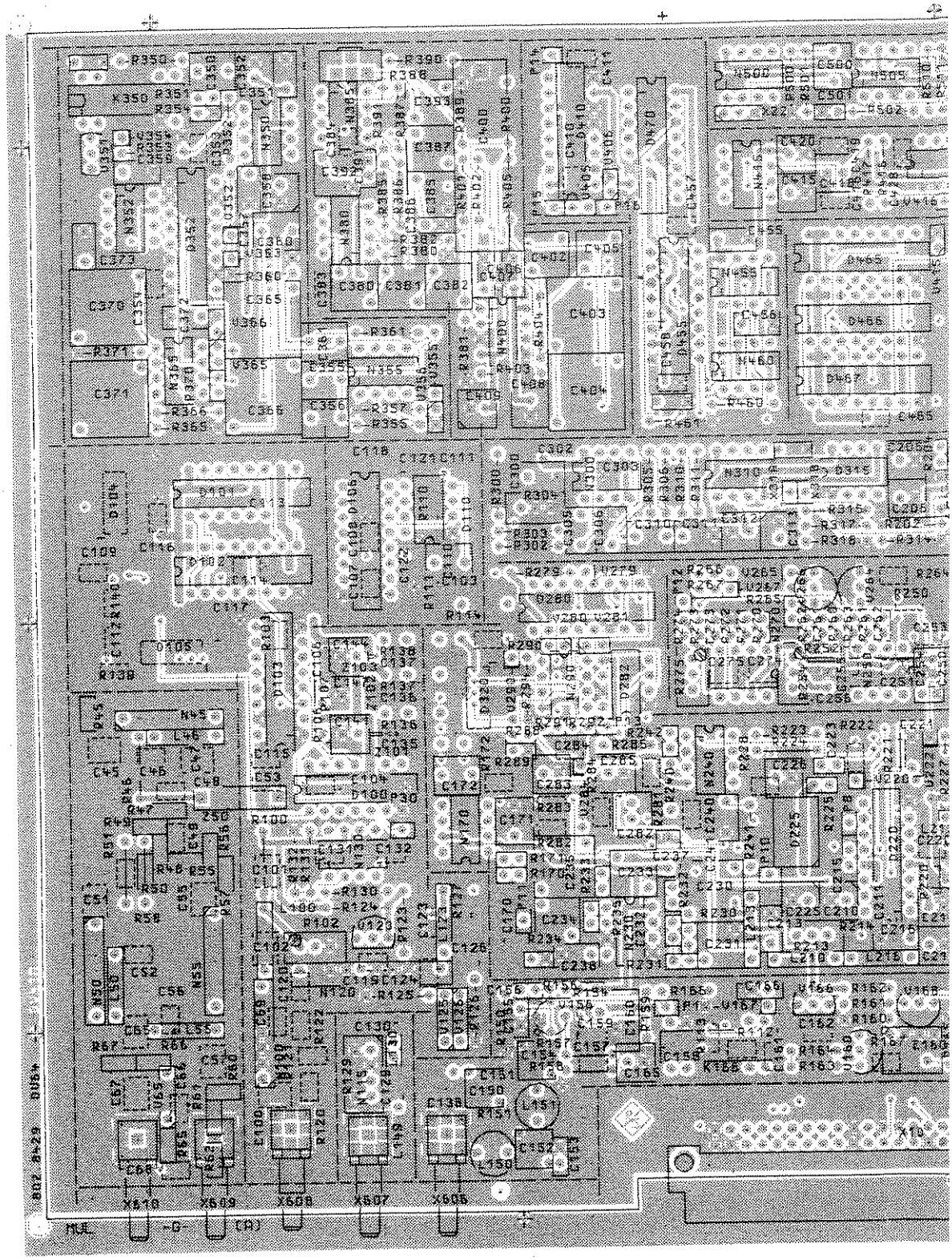

Ansicht und Leitungsführung Bauteilseite
View of tracks on component side

DV 41

(hierzu HVC 250)

ACHTUNG: EGB!
Elektrostatisch gefährdete Bauelemente erfordern eine besondere Handhabung.

ATTENTION ESD!
Electrostatic sensitive devices require a special handling.

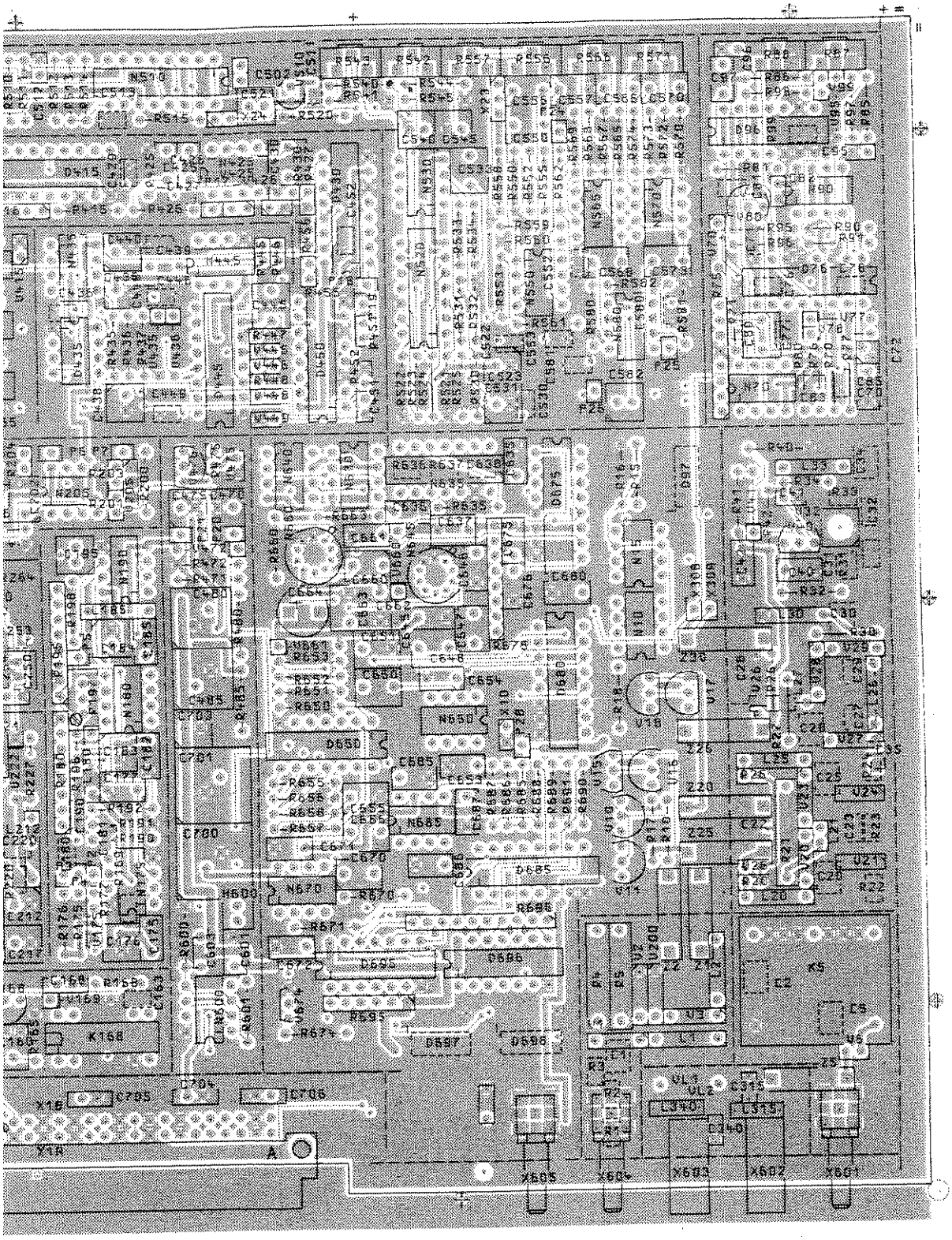

VARIANTENERKLÄRUNG/VERSION
VAR 02 – GRUNDAUSFÜHRUNG/BASIC MODEL

				Maße ohne Toleranzangabe	Maßstab 1 : 1	
					Halbzeug, Werkstoff	
				1KSA / Tag / Name	Benennung	
				Bearb. 05.87 SM	ANALOGTEIL Analog section	Z
				Gepr.		
				Norm		
				ROHDE&SCHWARZ	Zeichn.-Nr. 802.8435.01	EE
Änd. Zust.	Änderungs-Mitteilung	Tag	Name	zu Gerät CMT	reg. i. V. 802.2014 V	erste Z.

Blatt-Nr. 4 v. 7 Bl.

5 6 7 8

07 6001 8

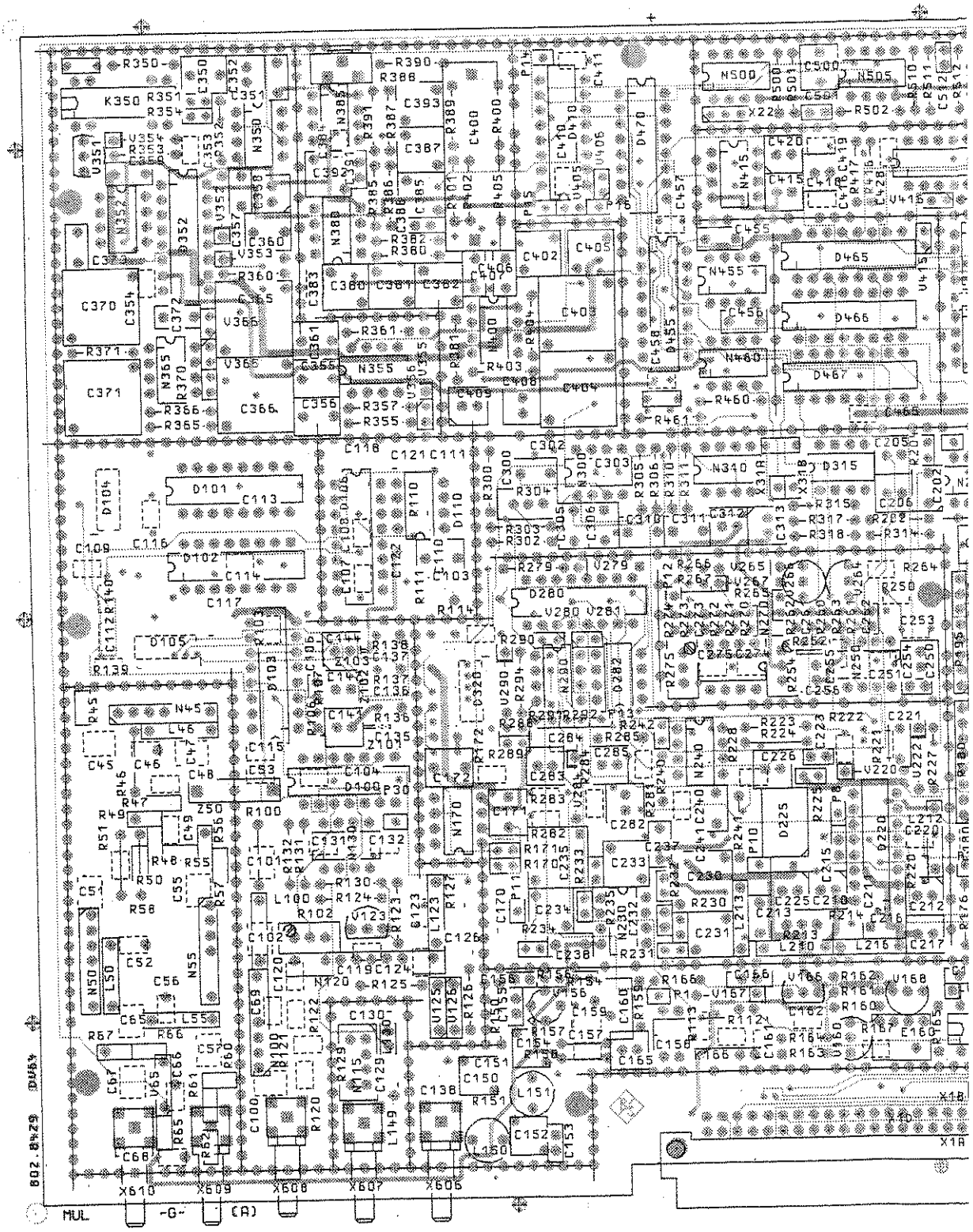

Ansicht und Leitungsführung Bauteilseite
View of tracks on component side

DV 43

(hierzu HVC 250)

ACHTUNG: EGB!
Elektrostatisch gefährdete Bauelemente erfordern eine besondere Handhabung.

ATTENTION ESD!
Electrostatic sensitive devices require a special handling.

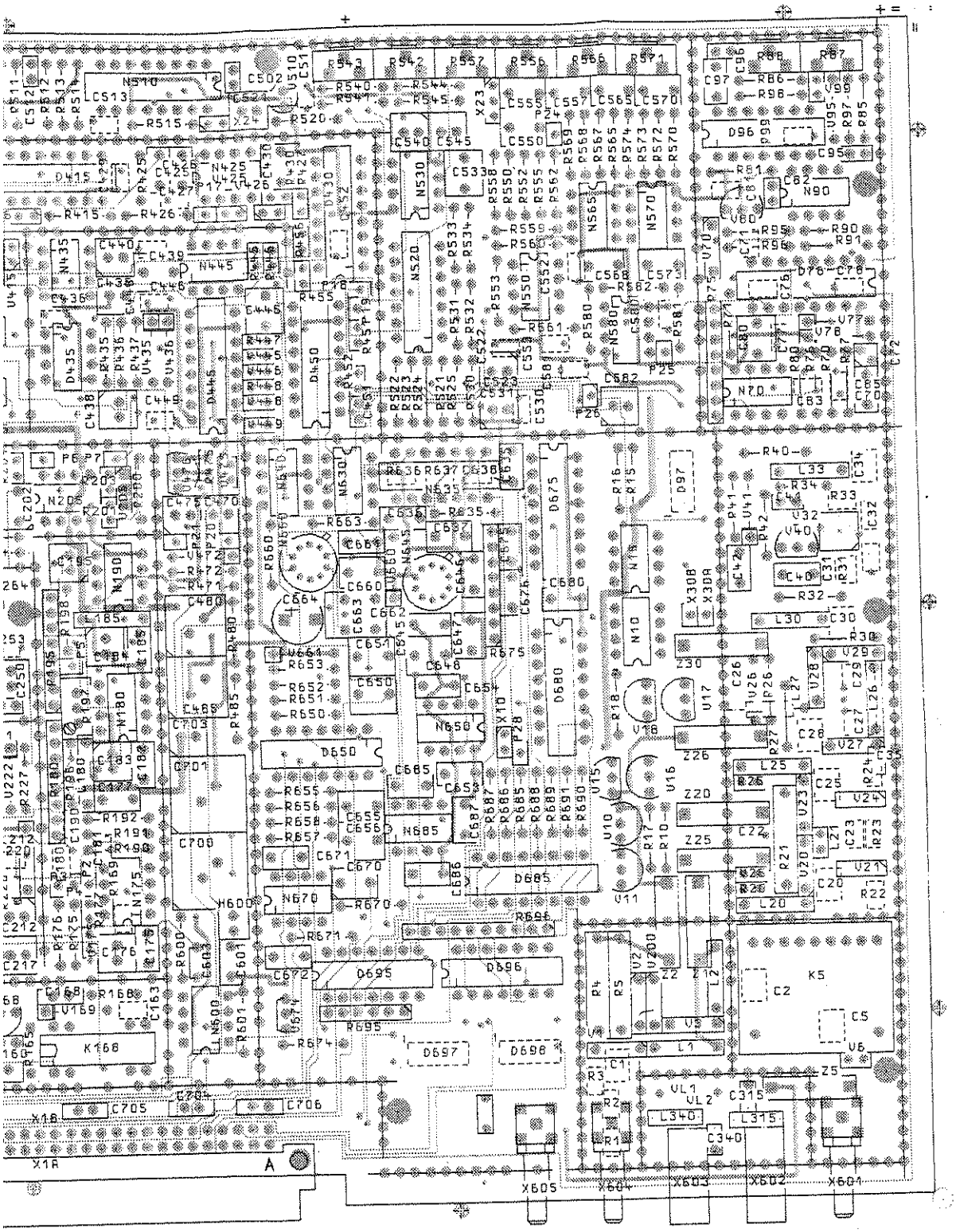

VARIANTENERKLÄRUNG/VERSION
VAR 02 – GRUNDAUSFÜHRUNG/BASIC MODEL

Änd. Zust.	Änderungs-Mitteilung	Tag	Name

Maße ohne Toleranzangabe

Maßstab 1 : 1

Halbzeug, Werkstoff

1KSA	Tag	Name
Bearb.	05.87	BT
Gepr.		
Norm		

Benennung

ANALOGTEIL
Analog section

Z

ROHDE&SCHWARZ

zu Gerät CMT

Zeichn.-Nr. 802.8435.01 EE

Blatt-Nr. 5 v. 7 Bl.

reg. i. V. 802.2014 V

erste Z.

07 6001 8

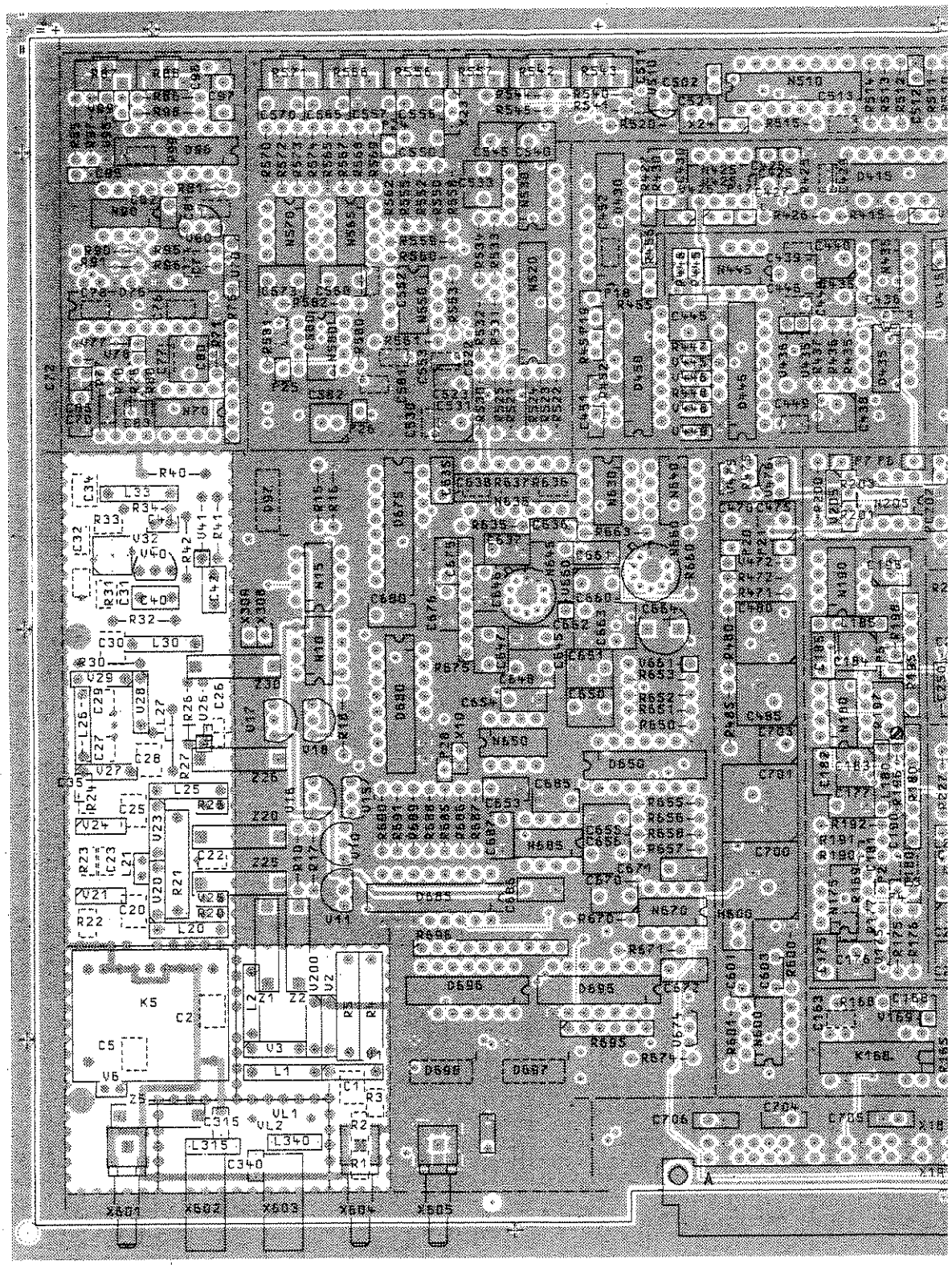

Ansicht und Leitungsführung Lötseite
View of tracks on solder side

DV 13

(hierzu HVC 250)

ACHTUNG: EGB!
Elektrostatisch gefährdete Bauelemente erfordern eine besondere Handhabung.

ATTENTION ESD!
Electrostatic sensitive devices require a special handling.

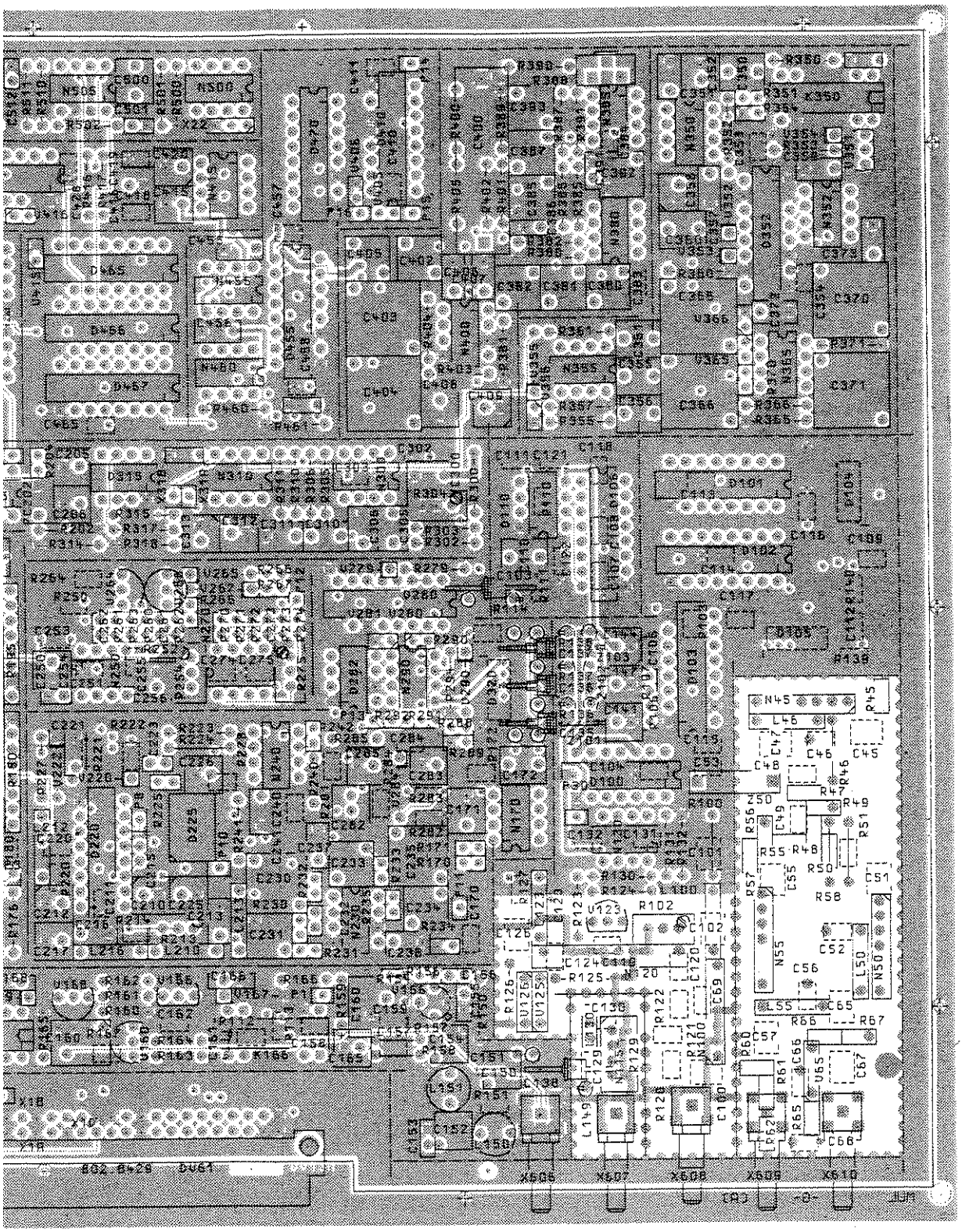

VARIANTENERKLÄRUNG/VERSION
VAR 02 – GRUNDAUSFÜHRUNG/BASIC MODEL

				Maße ohne Toleranzangabe	Maßstab 1 : 1	
					Halbzeug, Werkstoff	
				1KSA / Tag / Name	Benennung	
				Bearb. 05.87 BT	ANALOGTEIL Analog section	Z
				Gepr.		
				Norm		
				ROHDE&SCHWARZ	Zeichn.-Nr. 802.8435.01	EE	Blatt-Nr. 6 v. 7 Bl.
Änd. Zust.	Änderungs-Mitteilung	Tag	Name	zu Gerät CMT	reg. i. V. 802.2014 V	erste Z.