RESTRICTED
(For official use only)

A.P. 2563-AB
Volume I

FIRST EDITION
June 1945

THE
OUTPUT TESTER
TYPE 57

Prepared by direction of
the Minister of Aircraft Production

Promulgated by order of the
Air Council

AIR MINISTRY

NOTE TO READERS

Air Ministry Orders and Vol. II, Part I leaflets either in this A.P. or even in others, may affect the subject matter of this publication. Where possible, Amendment Lists are issued to bring this Volume into line, but it is not always practicable to do so; for example, when a modification has not been embodied in all the stores in Service.

Where an Order or leaflet is found to contradict any portion of this publication, the Order or leaflet is to be taken as the overriding authority.

When this volume is amended by the insertion of new leaves, the new or amended information is indicated by a vertical line in the outer margin. This line is merely to denote a change and is not to be taken as a mark of emphasis.

Each such leaf is marked at the top left-hand corner with the number of the A.L. with which it was issued.

AMENDMENT RECORD

Incorporation of an Amendment List in this publication is to be recorded by inserting the Amendment List number, signing in the appropriate column, and inserting the date of making the amendments.

A.L. No.	Amendments made by	Date
*		

*An Amendment Record Continuation Sheet (R.A.F. Form 2094A as amended to the size of this publication, which specify on demand), obtainable from A.P.F.S., Kensington, will be required when this page is full. Order it now.

THE OUTPUT TESTER TYPE 57

(Stores Ref: 10SB/6120)

LIST OF CONTENTS

LIST OF ILLUSTRATIONS

INTRODUCTION

1. The Output Tester, Type 57, is designed for checking the peak power output of pulse modulated transmitters over a frequency range of from 150 Mc/s to 250 Mc/s. The power reading is obtainable very easily, being read on a meter the scale of which gives a direct reading of wattage output.

2. The Output Tester consists essentially of an Indicator Unit, Type 247 (Stores Ref: 10QB/6323), two detector units, the Test Gear Connector Set (Stores Ref: 10H/6645), an Instrument Case (Stores Ref: 10SB/6214) and a copy of this manual. A WW version has been designed (para. 41).

3. The two detector units are :—

   (a) The Detector Unit, Type 67 (Stores Ref: 10SB/6233) of 50 ohms. impedance with a power range of 0–1500 watts., and

   (b) The Detector Unit, Type 68 (Stores Ref: 10SB/6243) of 75 ohms. impedance, with a power range of 0–1600 watts.

   The detector units are physically, but not electrically, interchangeable.

4. The instrument is designed to operate on the following voltages :—

   (a) 12 volts, D.C.
   (b) 80 volts, 400–2000 c/s.
   (c) 110 volts, 60 c/s.
   (d) 115 volts, 400–2000 c/s.
   (e) 180 volts, 500 c/s.
   (f) 230 volts, 50 c/s or 400 c/s.

5. The approximate overall dimensions of the instrument case are 18½ in. x 15 in. x 11 in. and the weight of the complete equipment, including the connector set, is 36 lbs. A front view illustration of the indicator unit is shown in Fig. 1.

GENERAL DESCRIPTION

THE DETECTOR UNITS

6. Description of the Output Tester, Type 57, must logically commence with consideration of the detector unit. As mentioned in para. 3 there are two units which are interchangeable. They consist of a type of Pye socket with resistive load and are designed to present the correct impedance of 50 ohms. or 75 ohms., according to the unit used. Circuit diagrams of the detector units are included as insets to Fig. 2.

7. Across the resistive load, R_1 and R_2 for D.U., Type 67 or R_3 and R_4 for Type 68, there is connected a diode, type VR. 92. The heater leads are screened and decoupled and power is supplied from a low capacity screened transformer T_1 in the Indicator Unit, Type 247.

8. The diode cathode load R_7, R_6, is situated in the Indicator Unit and its earthy end is connected to a voltage source adjustable between zero and positive 400 volts, D.C., by a potentiometer R_8 across the 400-volt H.T. line.

THE INDICATOR UNIT, TYPE 247

9. The diode (V_1 or V_2) demodulates the transmitter output and the resulting low frequency pulses are taken to the Indicator Unit via the socket Sk_1 (or Sk_2) and the plug P_1 to the grid of a pentode V_3 type VR.91. Here they are amplified. The output from V_3 is applied to an integrating circuit composed of C_{15} and R_{19} and the resulting D.C. from a diode V_4 type VR.92, is taken to a tuning indicator V_5 type CV.51.

10. To measure the power output of a transmitter the procedure is, therefore, to connect the appropriate detector unit to the output Pye plug of the transmitter under test. The positive voltage applied to the diode cathode load is

then adjusted by R_8, engraved NULL SET, until the positive voltage is just equal to the peak RF voltage of the transmitter. The detector diode then no longer rectifies and no D.C. is applied to the tuning indicator V_5 the "magic eye" of which remains *open*.

11. The positive voltage just necessary to prevent the eye from closing is then recorded on the built-in D.C. voltmeter M_1. The scale of M_1 is not marked in voltage but is calibrated in terms of the equivalent power output of the transmitter from the relationship :—

$$\text{Power (watts)} = \frac{V^2}{2R}, \text{ where}$$

V = Direct voltage — peak RF volts, and

R = Detector unit impedance to match transmitter.

12. In order to obtain a more open scale, a range switch S_1 is provided and this modifies the D.C. voltmeter ranges in such a manner that full scale reading is obtained with 10, 100 and 1,000 watts with 75 ohms impedance. Corresponding ranges with 50 ohms impedance are 15, 150 and 1,500 watts. To obviate confusion which might arise from the two power ranges colour coding is used :—black for 75 ohms and red for 50 ohms.

13. On each range of the D.C. voltmeter a portion of the series resistance is made variable. These pre-set potentiometers shown on the circuit diagram as R_{28}, R_{29} and R_{30} are adjusted and locked during calibration.

14. Provision is made to observe the shape of the transmitter pulse by the incorporation of a fourth position on the RANGE switch S_1. This position is marked PULSE SHAPE. When switched to this position the value of the diode cathode load (para. 8) is reduced to 1,000 ohms, R_5, and the positive bias on the diode is removed. The output from the cathode load is brought out to a terminal and Pye plug on the panel (P_2).

15. The power supply is obtained either from 12 volts D.C. or the A.C. supplies detailed in para. 4. The 12-volt source is connected to terminals on the panel and the A.C. supply to a four-pin W-plug P_8. This is normally connected for 80 volts and 230 volts. The change-over from D.C. to A.C. is effected by means of a switch S_2. This has a central OFF position.

16. A transformer T_2 has its HT secondary winding connected to a metal rectifier voltage doubler circuit comprising MR_1, MR_2, C_{21}, R_{25}, C_{20} and R_{24}. This supplies the positive 400 volts H.T. for the instrument. T_2 also carries the heater winding. When the switch S_2 is at A.C. the transformer T_2 is supplied from the mains transformer T_3 which provides a sinusoidal voltage which is equivalent to the non-sinusoidal supply obtained, at the D.C. position of switch S_2, from a vibrator, VIB.1.

17. The vibrator is energised from the 12-volt source at the D.C. position of the switch. In this case, however, a shunt resistance capacitance circuit (R_{26} and C_{22}) is placed, by the action of S_2, across the HT secondary winding of T_2.

18. The illustrations of Fig. 3 and Fig. 4 show, respectively, a plan view of the indicator unit and an underside view. Where possible the components are annotated in accordance with the circuit diagram of Fig. 2.

OPERATION

19. Two cables are provided in the Test Gear Connector Set :—

    (a) Type 1380, the 80-volt connector, terminated in a 4-pin W-socket and a 2-pin W-socket, and

    (b) Type 1779, the 230-volt connector, terminated in a 4-pin W-socket and a 3-pin Santon plug.

POWER SUPPLY

20. For 12-volt D.C. operation connect the 12-volt source, which must be capable of supplying 2 amps., to the terminals on the panel. The polarity is not important. The instrument is now ready for operation, by turning the power supply switch S_2 to the 12 V. D.C. position.

21. For A.C. operation the instrument as supplied has the mains transformer T_3 tappings connected to 80 volts between pins 1 and 2, and 230 volts between pins 3 and 4 of the plug P_3.

22. For 80-volt operation the cable type 1380 is used. (This can easily be remembered from the fact that the last two digits are 8 and 0.) Pins 1 and 2 of the 4-pin W-plug P_3, marked A.C. SUPPLY on the panel, are then connected up with the input cable. For 230 volts the cable type 1779 is used connecting up with pins 1 and 4 of P_3.

23. If any voltage other than 80 or 230, and as detailed in para. 4, is required, the tappings of the mains transformer T_3 should be adjusted to suit the cable in use. A separate primary booster winding provides fine adjustment in steps of 5 or 10 volts. The instrument is then ready for use on turning the power supply switch S_2 to the position A.C.

24. It is important to check the transformer primary connections before putting into service. A 1 amp. fuse is provided in the lead to pin 1 of P_3 and this

protects the transformer from any serious overload, but the check-up is necessary to avoid any chance of over or under-running.

TO CHECK TRANSMITTER POWER OUTPUT

25. Select the appropriate detector unit to match the 50 ohms or 75 ohms impedance of the transmitter and connect the 6-pin socket to the plug P_1, marked DETEC. UNIT. Connect the detector head to the RF output Pye plug on the transmitter.

26. Turn the RANGE selector switch S_1 to the position corresponding to the expected power output according to the following table:—

Det. Unit Type	Z ohms	Range Selector Switch Positions 1	2	3	4	Meter scale
67	50	15 W	150 W	1500 W	Pulse	Red
68	75	10 W	100 W	1000 W	Pulse	Black

27. Check that the pointer on the meter scale reads zero: if not, correct by means of the adjusting screw.

    Switch ON the transmitter and indicator unit and turn the NULL SET potentiometer until the meter reads approximately full scale.

28. Slowly turn the NULL SET control in an anti-clockwise direction until the tuning indicator, V_5, "eye" begins to close.

29. The power indication now shown on the meter gives directly the peak power output of the transmitter.

    In reading the meter care must be taken to choose the correct scale, corresponding to the position of the RANGE selector switch, also the coloured scale as shown in para. 26.

TO CHECK TRANSMITTER POWER OUTPUT WITH GREATER ACCURACY

30. The meter scale is calibrated direct in wattage from the relationship :

$$\text{Watts} = \frac{V^2}{2R}, \text{ where } V = \text{peak RF voltage, and } R = \text{load impedance.}$$

The value of R is assumed to be exactly 50 or 75 ohms for scale calibration purposes, but in practice, since carbon resistors form the load in the detector unit, to avoid impedance variations with frequency, the actual impedance will become of nominal value near 50 or 75.

31. If very accurate results are required the impedance of the diode head should be measured at the frequency at which the unit is to be used.

If the D.C. resistance presented at the Pye socket of the detector unit is measured it gives a fairly accurate value of the impedance when measured between 150 and 250 Mc/s. Suppose this to be R ohms.

Now, repeat the procedure set out in paras. 25 to 29 (above) and the output power reading is noted. Suppose this to be W watts.

Then more accurately :—

$$\text{Power output} = \frac{W \times 50}{R} \text{ or } \frac{W \times 75}{R} \text{ respectively}$$

when the detector unit impedance is 50 or 75 ohms.

TO CHECK TRANSMITTER PULSE SHAPE

32. Connect the appropriate impedance detector unit as detailed in para. 26.

Connect the Y plates of a suitable cathode ray tube monitor either to the Pye plug P_2 or to the terminal marked PULSE SHAPE and trigger the monitor from the transmitter modulating pulse.

33. Turn the RANGE selector switch S_1 to the PULSE SHAPE position.

Switch ON the indicator unit and observe the pulse shape on a monitor.

MAINTENANCE AND ADJUSTMENT

GENERAL

34. Maintenance of this equipment should be extremely simple and mainly confined to replacement of valves and, possibly, fuses. The three potentiometers R_{28}, R_{29} and R_{30} have been adjusted and locked during calibration and in no circumstances should they be interfered with unless accurate means are available for rechecking.

35. The most critical parts of the equipment are the two detector units but these should require very little attention: in any case the input socket and the position of the two resistors in each unit are most important and must not be touched. An interior view of the detector unit is shown in Fig. 5.

36. The accuracy of power reading will be impaired if the insulation resistance of the cathode circuit of the detector unit diode, with connector cable, falls appreciably below 200 megohms, measured at 500 volts. No difficulty should, however, normally be experienced on this point, but if a check is necessary it may be noted that the cathode is connected to pin 3 of the 6-pin W-socket.

VALVE CHANGING

37. **Detector unit.** The replacement or changing of the diode type VR.92 in either of the detector units should rarely be necessary and, in any case, it is desirable, firstly, to check that the diode heater is operating, after the screening cover has been removed. If it should be necessary to replace the valve, slacken the large round-headed bolt on the underside of the unit and slide back the metal framework supporting the diode valve holder, allowing the diode to move back at the same time by sliding out the anode pin from the clip on the Pye socket extension. The diode may then be removed from its holder and changed.

38. **Indicator unit.** If it should be necessary to change the tuning indicator, type CV.51, this may be done by slackening the two hexagonal-headed 2 BA bolts by means of a flat spanner, which will then allow the small valve holder plate to be moved sufficiently for the indicator to be removed.

39. **Fuses.** Two fuses are provided in the circuit. The fuse F_2 is a 1 amp. glass cartridge fuse situated on the mains transformer tapping panel. A 3 amp. fuse F_1 of the same type is on the chassis. The fuse F_2 is connected to the zero volts tapping on the mains transformer T_3 as a protection against serious overload due to wrong cable connection. The pin connections should be carefully rechecked before replacing the fuse.

40. The fuse F_1 gives protection only when using the 12-volt DC supply and is provided mainly as a precaution against a sticking contact in the vibrator. If this fuse should be blown and the cause is not known, the vibrator should be checked before the fuse is replaced.

"WW" VERSION.

41. The version of Output Tester, Type 57, using WW plugs and sockets is called Output Tester, Type 57/WW (10SB/6291).

This consists of the following units :—

Indicator Unit, Type 247/WW (10QB/6410).
Detector Unit, Type 67/WW (10SB/6292).
Detector Unit, Type 68/WW (10SB/6293).
Test Gear Connector Set (10HA/4159).
Comprising :—
(80V.) Connector, Type 6974/WW (10HA/4161).
(230V.) Connector, Type 6973/WW (10HA/4160).

Instrument Case (10SB/6214)
A tropical container is also supplied.

APPENDIX

NOMENCLATURE OF PARTS

THIS LIST OF PARTS IS CORRECT FROM INFORMATION AVAILABLE AT THE TIME OF COMPILATION. WHEN ORDERING SPARES FOR THE OUTPUT TESTER AP.1086 OR AVAILABLE SCHEDULES SHOULD BE CONSIDERED AS OVERRIDING THE INFORMATION CONTAINED IN THIS APPENDIX.

Stores Ref. No.	Nomenclature	Qty.	Ref. in Fig. 2	Remarks
10SB/6120	**Output Tester Type 57**			
	PRINCIPAL COMPONENTS—			
10QB/6223	Indicator Unit Type 247 ...	1		
10SB/6233	Detector Unit Type 67 ...	1		Imped. 50 ohms.
10SB/6234	Detector Unit Type 68 ...	1		Imped. 75 ohms.
10H/6645	Test Gear Connector Set ...	1		
10SB/6214	Case, Instrument	1		
	Indicator Unit Type 247			
	Consisting of :—			
	CONDENSER			
10C/14896	0.1 μF 500 v. working ...	3	C.11,C.12,C.15	20% paper tubular metal case
10C/12340	0.001 μF 750 v. working ...	1	C.13	Mica.
10C/14495	0.1 μF 350 v. working ...	1	C.14	20% paper tubular metal case
10C/14494	0.01 μF 1,000 v. working ...	5	C.16,C.17,C.22 C.23, C.24	25% paper tubular metal case
10C/14606	0.05 μF 500 v working ...	1	C.18	20% paper tubular metal case
10C/5653	8.0 uF 500 v. working ...	1	C.19	+50% —10%
10C/14447	0.5 μF 500 v. working ...	2	C.20, C.21	20% paper tubular metal case
	NOTE :—Condensers underlined are not directly replaceable by the types quoted as they need a special tag panel.			
	CHOKE—			
	LF, 10H, 10mA iron core ...	1	L.7	
	FUSE—			
10H/180	3 amp. glass cartridge ...	1	F.1	
10H/9613	1 amp. glass cartridge ...	1	F.2	
5L/311	LAMP, DIAL, 8 v., 0.2 amp. ...	1	PL.1	
—	METAL RECTIFIER	2	MR.1, MR.2	STC. H18/22/1R
10A/16168	METER, 0—1 m.A.	1	M.1	Taylor 400

Stores Ref. No.	Nomenclature	Qty.	Ref. in Fig. 2	Remarks
	RESISTANCE—			
10W/1867	1,000 ohms., ¼ watt.	2	R.5, R.18	20%
10W/993	0.1 megohms, ¼ watt.	3	R.6, R.14, R.15	20%
10W/1889	1.0 megohms, ¼ watt. ...	3	R.7,R.21,R.22	20%
	50,000 ohms., 5 watt, pot. ...	1	R.8	Wire wound
10W/9708	180,000 ohms., 1 watt. ...	1	R.9	10%
10W/1801	68,000 ohms., 2 watt.	1	R.10	10%
10W/10707	33,000 ohms., 1 watt.	1	R.11	5% High stability
10W/7297	0.1 megohms, 1 watt.	1	R.12	5% High stability
—	330,000 ohms., 1 watt.... ...	1	R.13	5% High stability
10W/9430	470,000 ohms., ¼ watt. ...	1	R.16	20%
10W/9840	0.1 megohms, ½ watt. ...	1	R.17	20%
10W/1822	47,000 ohms., ¼ watt. ...	1	R.19	20%
10W/1893	4.7 megohms, ¼ watt. ...	1	R.20	20%
10W/6471	220,000 ohms, ½ watt. ...	1	R.23	20%
10W/1522	2,700 ohms, ½ watt. ...	2	R.24, R.25	10%
10W/1744	5,600 ohms, ½ watt. ...	1	R.26	10%
10W/7312	0.1 megohms, 2 watt. ...	1	R.27	20%
	10,000 ohms.	1	R.28	Variable w/w
	30,000 ohms.	1	R.29	Variable w/w
	0.1 megohms.	1	R.30	Variable w/w
	SWITCH—			
	Power/range, Pulse/shape ...	1	S.1	Oak type
	Power supply	1	S.2	Burne Jones 3w
	TRANSFORMER—			
	Low capacity	1	T.1	
	Instrument supply	1	T.2	
	Mains	1	T.3	
	VIBRATOR TYPE 49 or G525 ...	1	VIB.1	
	VALVE—			
10E/105	Type VR.92	1	V.4	
10E/92	Type VR.91	1	V.3	
10CV/51	Type CV.51	1	V.5	Tuning indicator
	PLUG—			
10H/391	Type W/198	1	P.3	A.C. mains
10H/392	Type W/199	1	P.1	6 pin
10H/528	Type 229	1	P.2	Pulse shape
	Detector Units Types 67 & 68			Common components are starred *
	Consisting of :—			
	CABLE DUMET 4 ... *	2		
	CONDENSER—			
	50 $\mu\mu$ F ... ... *	2	C.1, C.6	Mica
	47 $\mu\mu$ F ceramic disc ... *	8	C.2-5 C.7-10	
	CHOKE RF	6	L.1-6	

Stores Ref. No.	Nomenclature	Qty.	Ref. in Fig. 2	Remarks
	RESISTANCE—			
10W/10846	100 ohms. 1 watt.	2		5% in Type 67
	150 ohms. 1 watt.	2	R.1, R.2	5% in Type 68
10H/405	SOCKET, 6 PIN W.151 ... *	2	R.3, R.4	
10E/105	VALVE TYPE VR.92 ... *	2	SK.1, SK.2 V.1, V.2	Diode
10H/6645	**Test Gear Connector Set**			
	Consisting of :—			
10H/3641	CONNECTOR TYPE 1380 ...	1		For 80 v.
10H/6464	CONNECTOR TYPE 1779 ...	1		For 230 v.
10SB/6291	**Output Tester, Type 57/WW**			WW version
	Consisting of :—			
10QB/6410	INDICATOR UNIT TYPE 247/WW ...	1		
10SB/6292	DETECTOR UNIT TYPE 67/WW	1		Imped. 50 ohms.
10SB/6293	DETECTOR UNIT TYPE 68/WW	1		Imped. 75 ohms.
10HA/4159	TEST GEAR CONNECTOR SET	1		
	Consisting of :—			
10HA/4161	Connector, Type 6974/WW	1		For 80 v.
10HA/4160	Connector, Type 6973/WW	1		For 230 v.
10SB/6214	CASE, INSTRUMENT	1		
	CONTAINER, TROPICAL ...	1		
	Detector Units, Types 67/WW and 68WW			Common components are starred*
	Consisting of :—			
5E/2459	CABLE SEXTOCOREVINMET 2*	2		
10H/4537	SOCKET, 6-pin W.W. 561* ...	2	SK.1, SK.2	
10QB/6410	**Indicator Unit, Type 247/WW**			
	Consisting of :—			
	PLUG—			
10H/4520	Type WW/595	1	P.3	4A, A.C. mains
10H/4522	Type WW/597	1	P.1	6-pin
10H/3930	Pye type 552	1	P.2	Pulse shape

NOTE :—Remaining components are as specified for Output Tester Type 57.

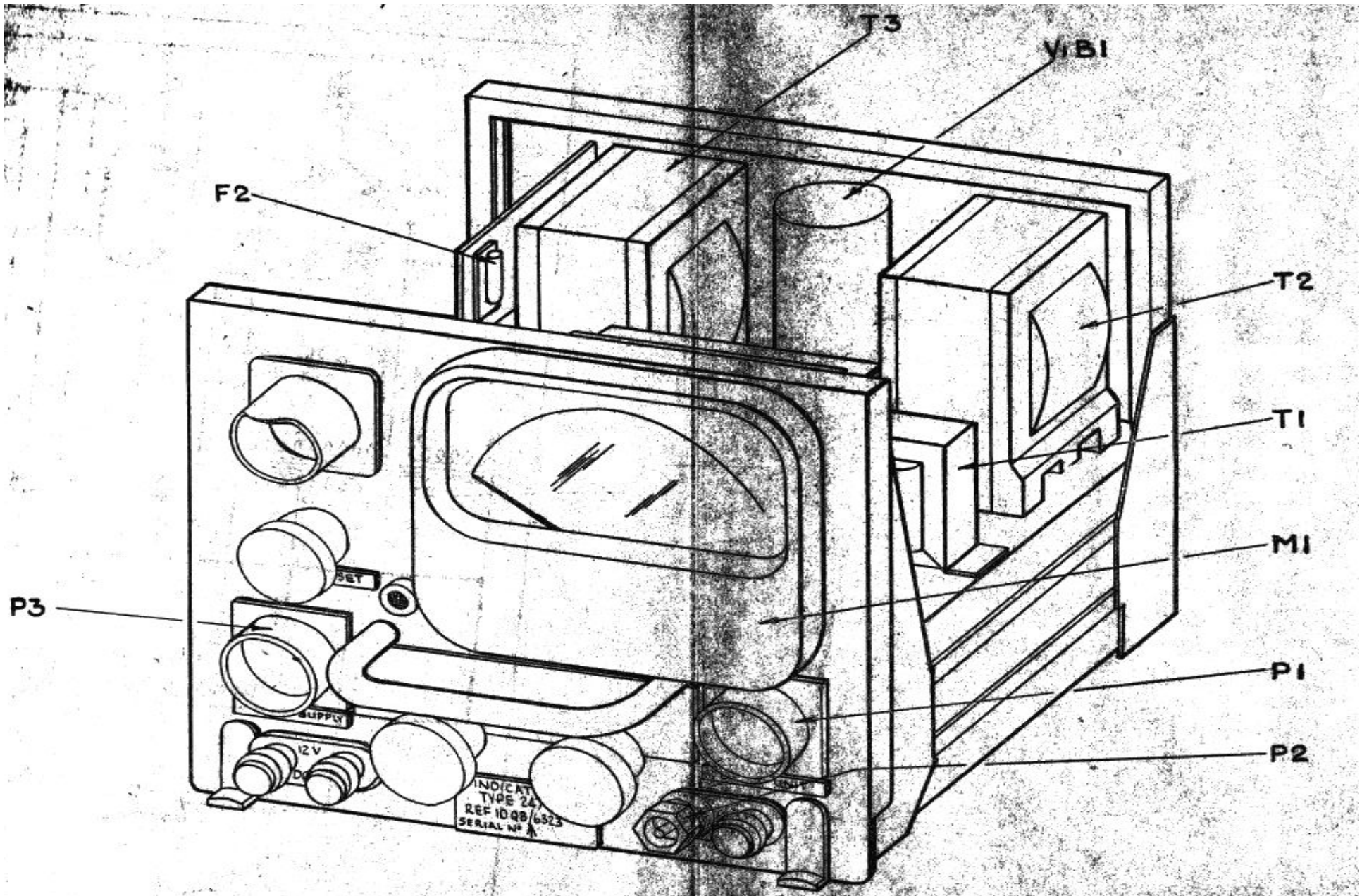

FRONT VIEW OF INDICATOR UNIT TYPE 247 FIG. 1.

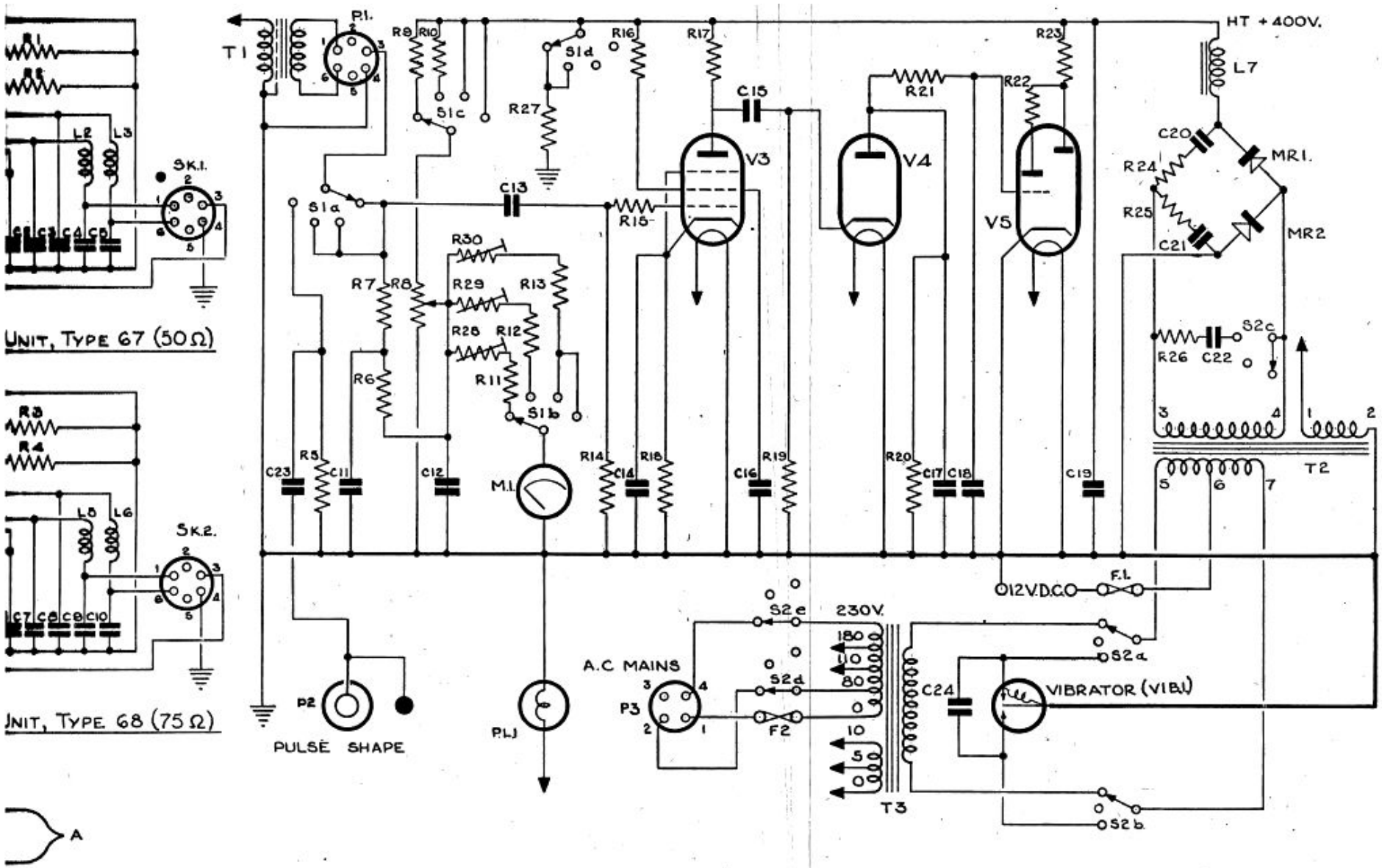

AB OUTPUT TESTER TYPE 57-CIRCUIT

FIG. 2.

SCHEDULE OF COMPONENTS

R 1	RESISTOR	100Ω	±5%	1 W	C13	CONDENSER	0·001μF +100% -5% 750 V.
R 2	"	100Ω	±5%	1 W	C14	"	0·1 μF ±20% 350 V.
R 3	"	150Ω	±5%	1 W	C15	"	0·1 μF ±20% 500 V.
R 4	"	150Ω	±5%	1 W	C16	"	0·01 μF ±25% 1000 V.
R 5	"	1 KΩ	±20%	½ W.	C17	"	0·01 μF ±25% 1000 V.
R 6	"	100KΩ	±20%	½ W.	C18	"	0·05 μF ±20% 500 V.
R 7	"	1 MΩ	±20%	½ W	C19	"	8 μF +50% -20% 500 V.
R 8	"	VAR. 50KΩ		5 W.	C20	"	0·5 μF ±20% 500 V.
R 9	"	100KΩ	±10%	1 W.	C21	"	0·5 μF ±20% 500 V.
R10	"	68KΩ	±10%	2 W.	C22	"	0·01 μF ±25% 1000 V.
R11	"	33KΩ	±5%	1 W.	C23	"	0·01 μF ±25% 1000 V.
R12	"	100KΩ	±5%	1 W.	C24	"	0·01 μF ±25% 1000 V.
R13	"	330KΩ	±5%	1 W.			
R14	"	100KΩ	±20%	½ W.	L 1	R.F. CHOKE	A31/3271
R15	"	100KΩ	±20%	½ W.	L 2	"	" "
R16	"	470KΩ	±20%	½ W.	L 3	"	" "
R17	"	100KΩ	±20%	½ W.	L 4	"	" "
R18	"	1 KΩ	±20%	½ W.	L 5	"	" "
R19	"	47KΩ	±20%	½ W.	L 6	"	" "
R20	"	4·7MΩ	±20%	½ W.	L 7	SMOOTHING CHOKE	D622A/15
R21	"	1 MΩ	±20%	½ W.			
R22	"	1 MΩ	±20%	½ W.	T 1	LOW CAPACITY TRANS.	D622A/14.
R23	"	220KΩ	±20%	½ W	T 2	INSTRUMENT TRANS.	D622A/13.
R24	"	2·7KΩ	±10%	½ W	T 3	MAINS TRANS.	D622A/11.
R25	"	2·7KΩ	±10%	½ W			
R26	"	5·6KΩ	±10%	½ W	V 1	VALVE	VR 92
R27	"	100KΩ	±20%	2 W	V 2	"	VR 92
R28	"	VAR. 10KΩ	±10%	2½ W	V 3	"	VR 91
R29	"	VAR. 30KΩ	±10%	3 W	V 4	"	VR 92
R30	"	VAR. 100KΩ		5 W	V 5	"	CV 51
C 1	CONDENSER	50μμF	PART OF DIODE HD. 15.C.TES. NO. C.C.A. 470K.		F 1	FUSE	3 AMP. CART. TYPE
C 2	"	47μμF			F 2	"	1 AMP. CART. TYPE
C 3	"	47μμF	"				
C 4	"	47μμF	"		MR 1	RECTIFIER	H18-22-1R
C 5	"	47μμF	"		MR 2	"	H18-22-1R
C 6	"	50μμF	PART OF DIODE HD. 15.C.TES. NO. C.C.A. 470K.				
C 7	"	47μμF			S 1	SWITCH	4P. 4 WAY. OAK CERAMIC.
C 8	"	47μμF	"		S 2	"	4P. 3 WAY. BURNE-JONES.
C 9	"	47μμF	"				
C10	"	47μμF	"		M.1.	METER	0-1 ma M.C.
C11	"	0·1 μF	±20% 500 V.		V.B.1.	VIBRATOR	MALLORY 949 or 9525
C12	"	0·1 μF	±20% 500 V.		P.L.1.	DIAL LAMP	8V-1·6W.

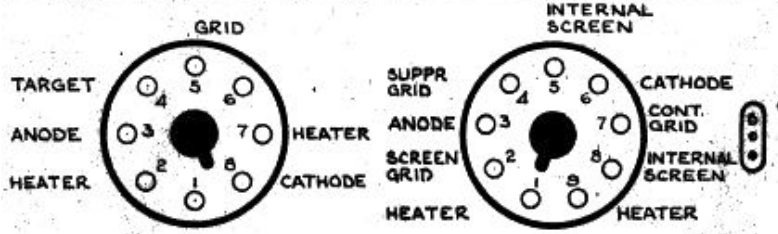

CV.51. VR.91

VALVE BASES.

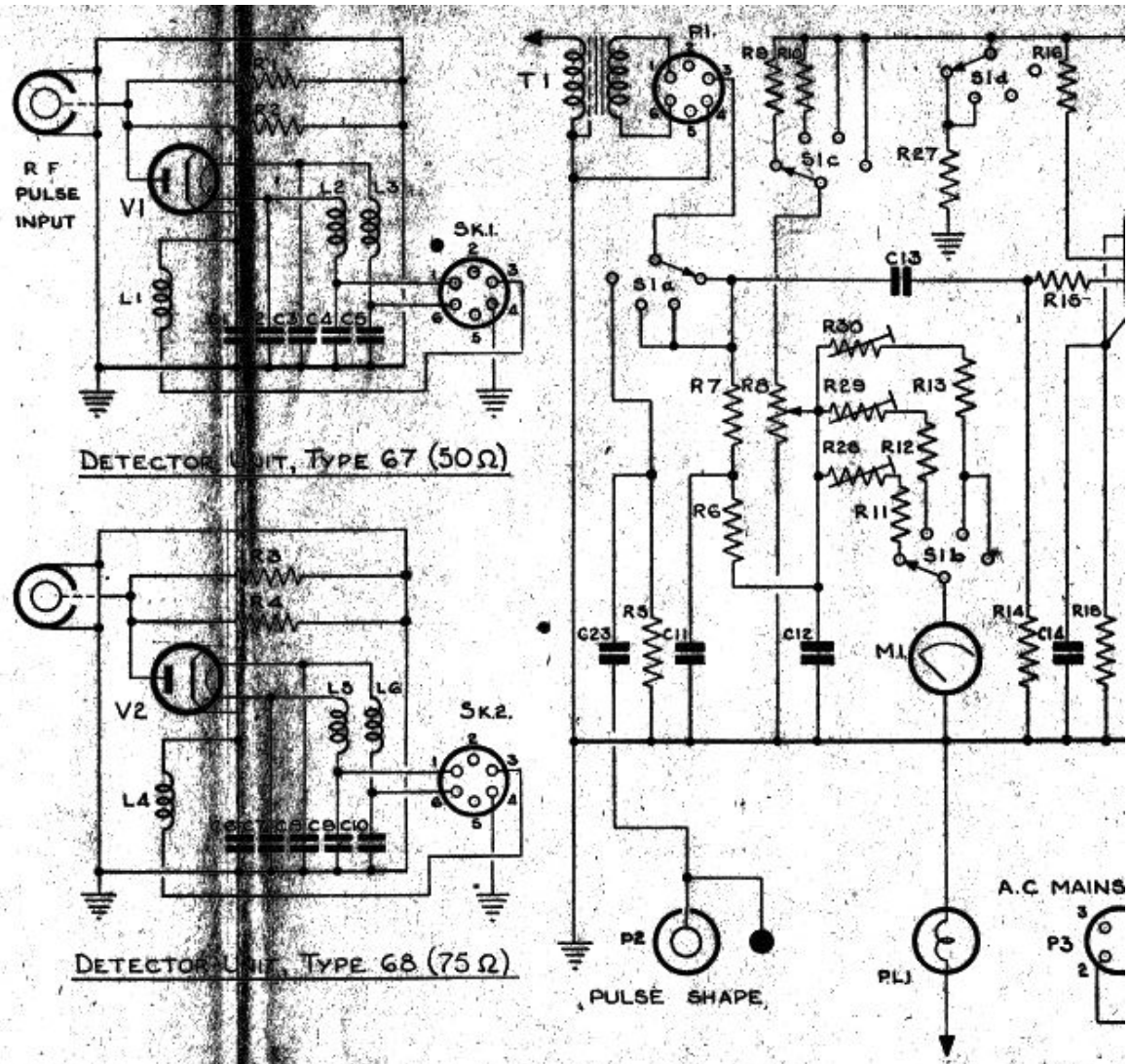

AP 2563-A OUTPUT TESTER TYP

MPONENTS	
ONDENSER	0·001 μF ±20% 750 V.
"	0·1 μF ± 20% 350 V.
"	0·1 μF ± 20% 500 V.
"	0·01 μF ± 25% 1000 V.
"	0·01 μF ± 25% 1000 V.
"	0·05 μF ± 20% 500 V.
"	8 μF +50% −20% 500 V.
"	0·5 μF ± 20% 500 V.
"	0·5 μF ± 20% 500 V.
"	0·01 μF ± 25% 1000 V.
"	0·01 μF ± 25% 1000 V.
"	0·01 μF ± 25% 1000 V.
R.F. CHOKE	A31/3271
" "	"
" "	"
" "	"
" "	"
" "	"
MOOTHING CHOKE	D622A/15
OW CAPACITY TRANS.	D622A/14.
NSTRUMENT TRANS.	D622A/13.
MAINS TRANS.	D622A/11.
VALVE	VR 92
"	VR 92
"	VR 91
"	VR 92
"	CV 51
USE	3 AMP. CART. TYPE
"	1 AMP. CART. TYPE
RECTIFIER	HIB-22-1R
"	HIB-22-1R
SWITCH	4 P. 4 WAY. OAK CERAMIC.
"	4P. 3 WAY. BURNE-JONES.
METER	0 - 1 ma M.C.
VIBRATOR	MALLORY G49 or G525
DIAL LAMP	8V - 1·6W.

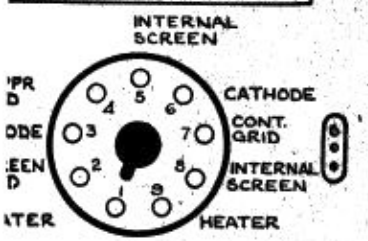

VR.91

VALVE BASES.

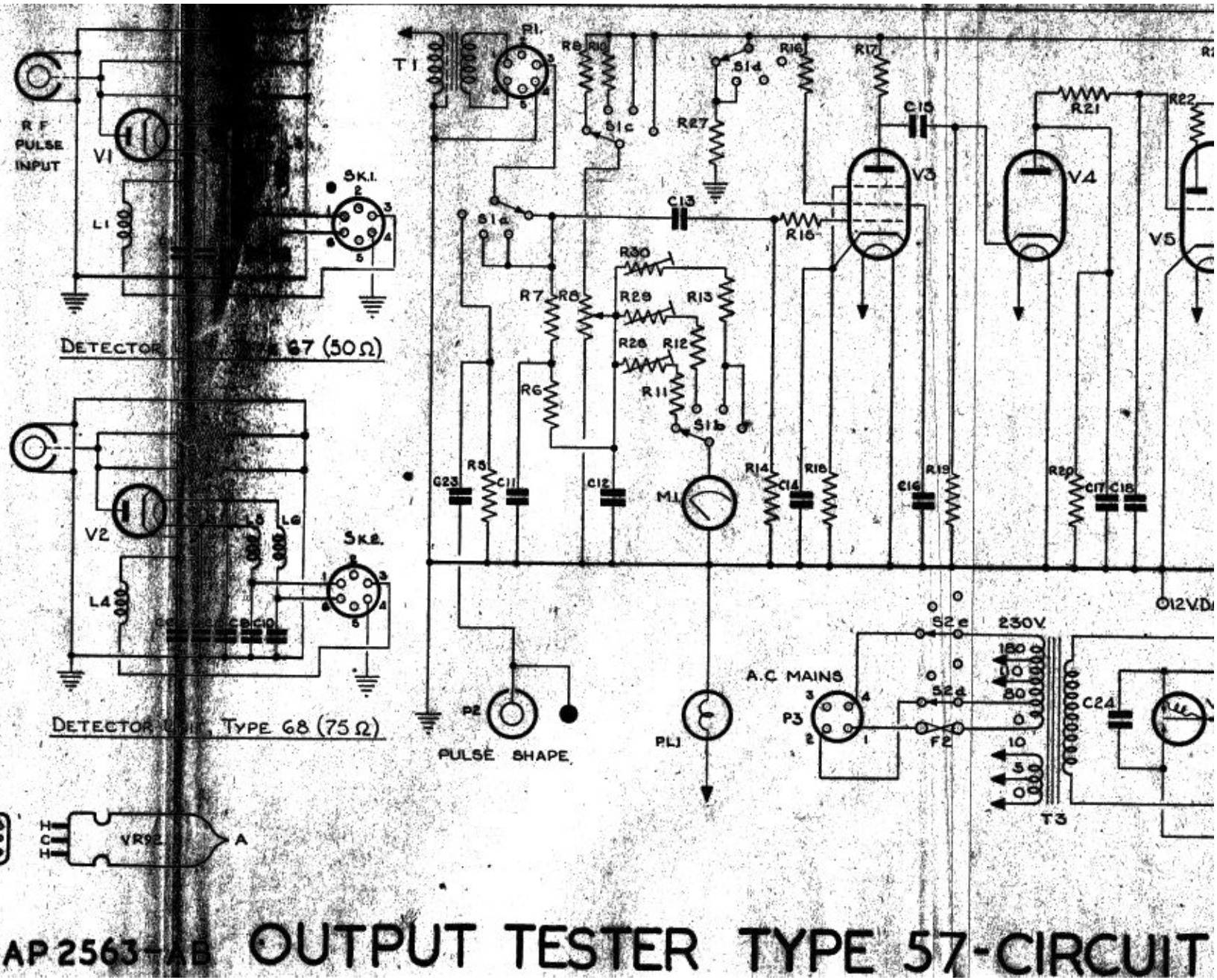

AP 2563-AB OUTPUT TESTER TYPE 57-CIRCUIT

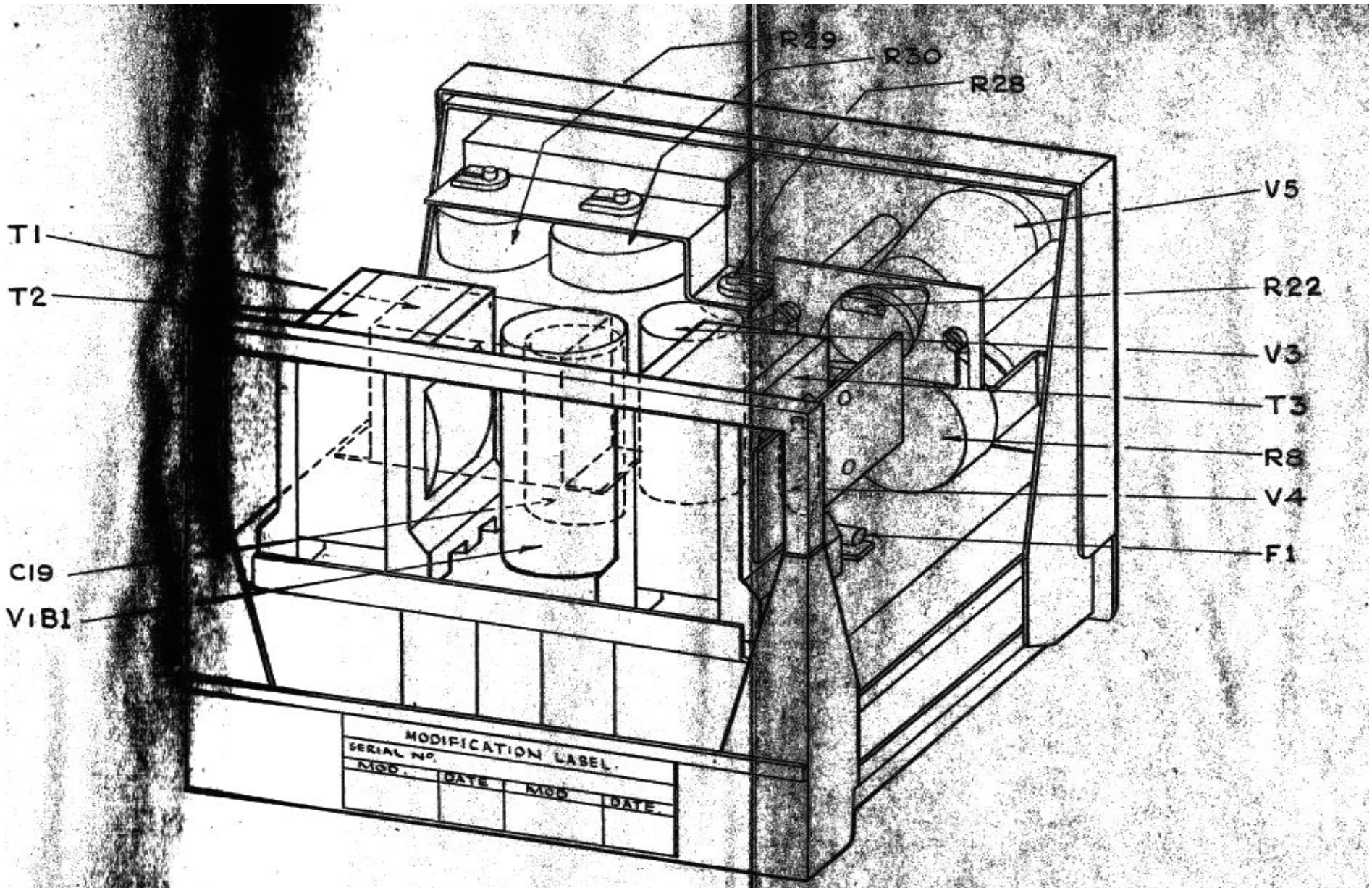

PLAN VIEW OF INDICATOR UNIT TYPE 247 FIG 3.

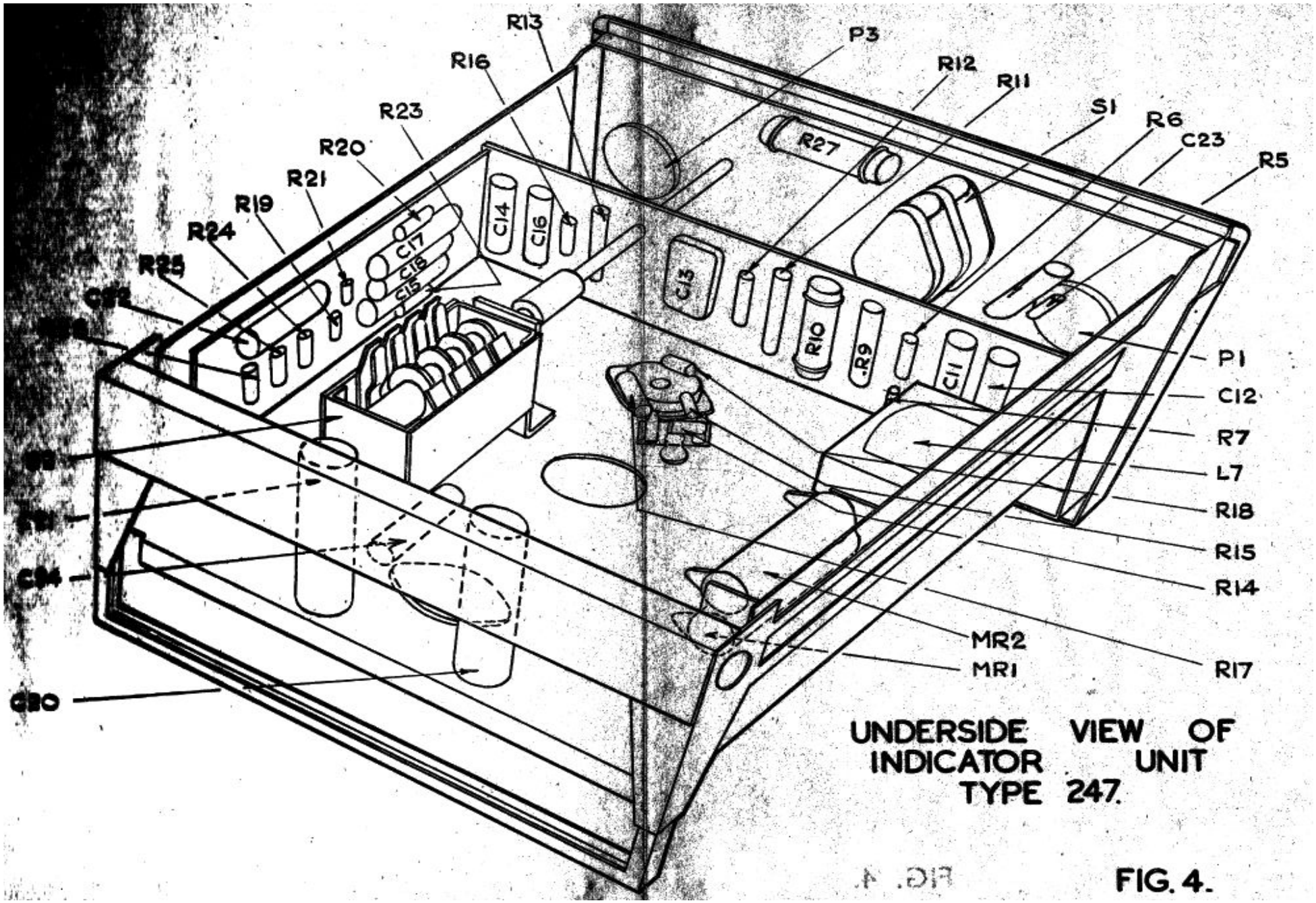

UNDERSIDE VIEW OF INDICATOR UNIT TYPE 247.

FIG. 4.

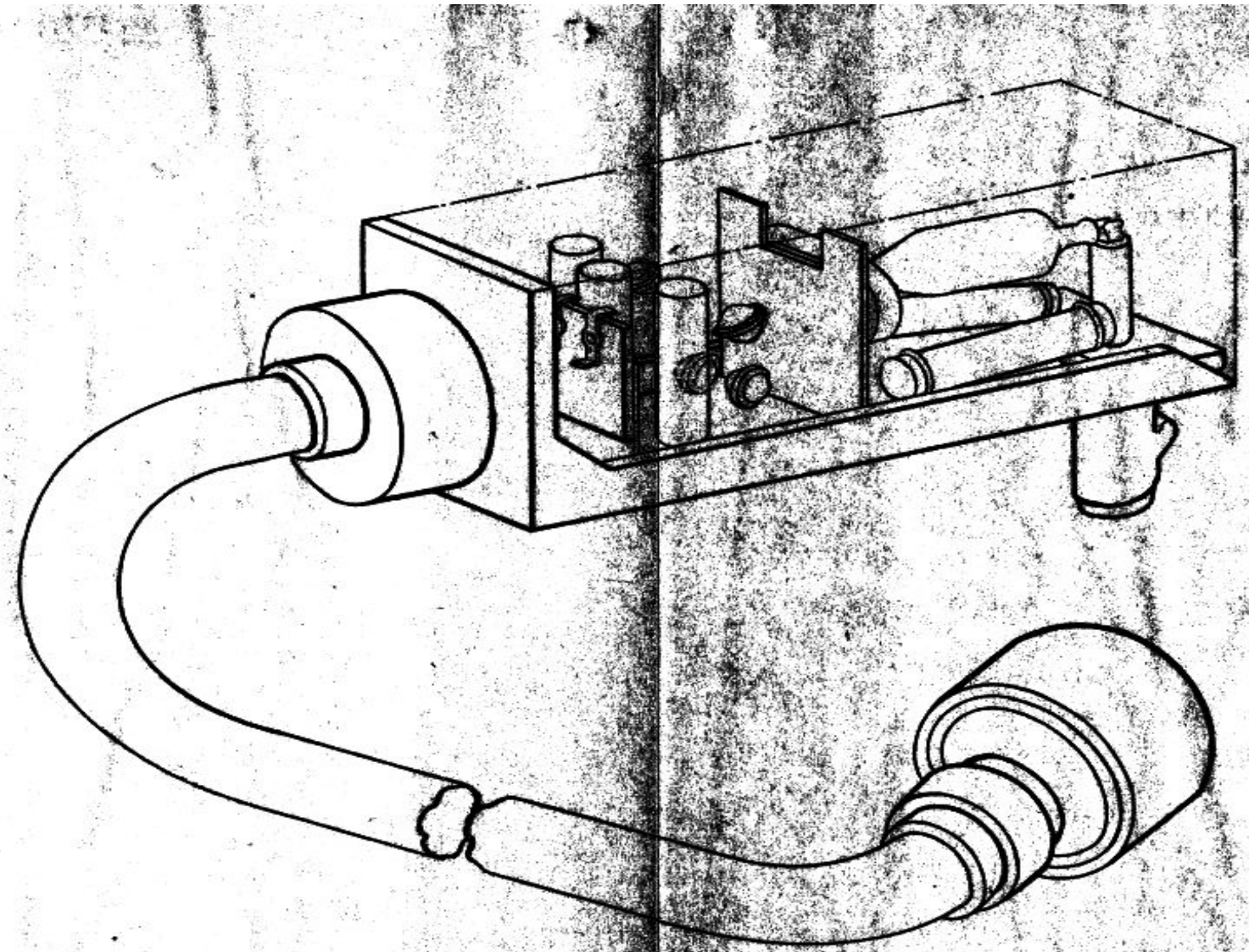

INTERIOR VIEW OF DETECTOR UNIT. FIG. 5.

NOTES