ELECTRICAL AND MECHANICAL
ENGINEERING INSTRUCTIONS

TELECOMMUNICATIONS F 572

RECEIVER-TRANSMITTER RADIO RT-F1/PRC

TECHNICAL DESCRIPTION

Issue 1, 1 Dec 69.

Distribution — Class 11.2 — Code No. 4.

RECEIVER—TRANSMITTER. RADIO RT—F1/PRC

TECHNICAL DESCRIPTION

INDEX OF TEXT

	Para
GENERAL INFORMATION	1 to 53
INTRODUCTION	1 to 14
ARRANGEMENT OF EQUIPMENT	15 to 20
Layout of Controls	15
Layout of Equipment	16 to 20
PRINCIPLES OF OPERATION	21 to 53
Method of Modulation, Demodulation and Frequency Translation	21
Transmitter Signal Path	22 to 25
Receiver Signal Path	26 to 27
Sidetone	28
Frequency Generation System	29 to 31
Frequency Synthesiser	32 to 36
Catalytic Oscillators	37 to 43
Functional Description	44 to 49
Power Distribution System	50 to 53
DETAILED TECHNICAL DESCRIPTION	54 to 229
4 MHz MASTER OSCILLATOR	54 to 55
General	54
Offset Frequency	55
100 kHz PULSE GENERATOR BOARD	56 to 66
General	56 to 57
Locked Oscillator and Buffer Stages	58 to 63
Blocking Oscillator Stages	64 to 66
10 kHz PULSE GENERATOR BOARD	67 to 72
General	67 to 68
Amplifier and Locked Oscillator Stages	69
Blocking Oscillator Stages	70 to 72
FREQUENCY SYNTHESISER	73 to 107
General	73
100 kHz Input Filter 10-1Q1	74
First Mixer 10-2CB1	75
Megahertz Selection Oscillator 10-25CB1	76
First Isolating Stage 10-26CB1	77
Second Isolating Stage 10-27CB1	78
Bandpass Filter 10-3Q1	79
Second Mixer 10-4CB1	80
Hundred kHz Selection Oscillator 10-28CB1	81
First Isolating Stage 10-29CB1	82
Second Isolating Stage 10-30CB1	83
Kilohertz Selection Oscillator 10-31CB1 and CB2	84
Crystal Filter 10,650 kHz 10-5Q1	85
Third Mixer 10-6CB1	86
Crystal Filter 10,445 kHz 10-7Q1	87
10,445 kHz Amplifier 10-8CB1	88
Ten Kilohertz Selection Oscillator 10-32CB1	89
First Isolating Stage 10-33CB1	90
Second Isolating Stage 10-34CB1	91
10 kHz Input Filter 10-9Q1	92
Fourth Mixer 10-10CB1	93
Crystal Filter 10,705 kHz 10-11Q1	94
Channel Centering Module 10-12CB1	95
Crystal Filter 10,906 kHz 10-13Q1	96
Sixth Mixer 10-14CB1	97
Bandpass Filter 10-15Q1	98

	Para
Seventh Mixer 10-16CB1	99
Tuned ALC Amplifier 10-17CB1	100
Eighth Mixer 10-18CB1	101
Bandpass Filter 10-19Q1	102
Final Mixer 10-20CB1	103
Final Lowpass Filter 10-21Q1	104
Amplifier Detector 10-22CB1	105
Final Highpass Filter 10-23Q1	106
ALC Decoupling Filter 10-24Q1	107
COMPRESSION AMPLIFIER AND RELAY DRIVE BOARD	108 to 125
General	108
Compression Amplifier	109 to 115
Relay Drive Circuit	116 to 125
MODULATOR BOARD	126 to 135
General	126
Principle of Operation	127 to 130
Circuit Description	131 to 135
RF AMPLIFIER	136 to 154
General	136 to 138
Tuning System	139 to 143
Circuit Description	144 to 154
POWER AMPLIFIER PARTS A AND B, AUTOMATIC LEVEL CONTROL AND BANDPASS FILTERS	155 to 169
General	155 to 156
Power Amplifier Part A	157 to 158
Power Amplifier Part B	159 to 161
Automatic Level Control	162 to 163
Voltage Sensing	164 to 166
Current Sensing	167 to 168
Protection Circuits	169
Current Protection	170
Voltage Protection	171
Bandpass Filters	172
INTERNAL COUPLING CIRCUIT AND CURRENT METERING ASSEMBLY	173 to 178
General	173 to 174
Internal Coupling Circuits	175 to 177
Current Metering Assembly	178
COUPLER, ANTENNA, CU-F1	179 to 180
IF AMPLIFIER, AGC AND BFO BOARD	181 to 194
General	181
Receiver IF Amplifier	182 to 185
AGC Circuit	186 to 189
AM Detector	190
SSB/CW Detector	191
Receiver Carrier Gate	192
Beat Frequency Oscillator	193 to 194
SIDETONE AND AUDIO BOARD	195 to 201
General	195
Audio Amplifier	196
Tune Oscillator	197
Sidetone Oscillator	198
Sidetone Gate	199
Sidetone Keying Gate	200
Carrier Gate Trigger	201
10V REGULATOR AND BATTERY TEST CIRCUIT	202 to 214
General	202
Regulator	203 to 212
Battery Test Circuit	213 to 214
1.4V REGULATOR	215 to 222

	Para
TRANSMIT–RECEIVE RELAYS. MODE AND POWER SWITCH	223 to 226
Transmit-Receive Relays	223 to 224
Mode Switch	225
Power Switch	226
ACCESSORIES	227 to 232
Microphone	227
Earpiece	228
Handset	229
Telegraph Key	230
Battery	231
Antennas	232

INDEX OF FIGURES

Fig.		Page
1	Front Panel Controls	6
2	Simplified Block Diagram	8
3	Signal Path Diagram	9
4	Block Diagram of Frequency Generation System	10
5	Principle of Catalytic Oscillators	11
6	Block Diagram of Frequency Synthesiser and associated Harmonic Generation	12
7	Block Diagram of Power Distribution System	14
8	100 kHz Pulse Generator	15
9	10 kHz Pulse Generator	16
10	100 kHz Input Filter F1 and Mixer M1	18
11	MHz Selection Oscillator and Output Isolation Stages	19
12	Bandpass Filter F2 and Mixer M2	20
13	100 kHz Selection Oscillator and Output Isolation Stages	21
14	kHz Selection Oscillator	22
15	Crystal Filter F3 and Mixer M3	23
16	Crystal Filter F4 and 10,445 kHz Amplifier	24
17	10 kHz Selection Oscillator and Output Isolation Stages	25
18	10 kHz Input Filter F5, Mixer M4, Crystal Filter F6 and Channel Centering Module OS 4 and M5	26
19	Crystal Filter F7, Mixer M6, Bandpass Filter F8 and Mixer M7	27
20	ALC Amplifier, Mixer M8 and Bandpass Filter F10	29
21	Final Mixer M9, Lowpass Filter F11a, Amplifier-detector, Highpass Filter F11b and ALC Filter	30
22	Compression Amplifier	31
23	Relay Drive Circuit	32
24	Modulator	34
25	Simplified Coupling Circuit	36
26	Power Amplifier and ALC	38
27	Bandpass Filter Unit	40
28	Whip Antenna Matching	42
29	Wire Antenna Matching	42
30	Wire Antenna Matching	43
31	Current Metering, Mode 1	43
32	Current Metering, Mode 2	44
33	Coupler, Antenna, CU-F1	44
34	IF Amplifier, AGC Circuit and AM Detector	45
35	SSB/CW Detector, Receiver Carrier Gate and BFO	47
36	Sidetone and Audio Board	48
37	Basic Circuit of Switched Voltage Regulator	50
38	10V Regulator and Battery Test Circuit	50
39	1.4V Regulator	52
40	Microphone, Dynamic, Lightweight	54
41	Handset	54
1001	Exploded View of RT Unit	1026
1002	PRC-F1 Block Schematic	1027
1003	Synthesiser Wiring Diagram	1028
1004	RF Amplifier	1029
1005	Internal Coupling Circuit and Current Metering	1030
1006	Mode Switch	1031
1007	Front Panel Circuit	1032

INDEX OF TABLES

Table		Page
1.	Functions of Front Panel Controls	6-7
2.	Synthesiser Output Frequency	10
3.	Synthesiser Filter Outputs	13
4.	Functions of Relay Contacts	53
1001.	Component Schedule – RF Amplifier	1001
1002.	Component Schedule – Mode Switch	1003
1003.	Component Schedule – Receiver IF Amplifier, AGC and BFO Board	1004
1004.	Component Schedule – Sidetone and Audio Board	1005
1005.	Component Schedule – Compression Amplifier and Relay Drive Board	1006
1006.	Component Schedule – Modulator Board	1007
1007.	Component Schedule – Power Amplifier Part A, ALC, 1.4V Regulator and Bandpass Filters	1008
1008.	Component Schedule – 100 kHz Pulse Generator	1011
1009.	Component Schedule – 10 kHz Pulse Generator	1012
1010.	Component Schedule – Frequency Synthesiser	1013
1011.	Component Schedule – Main Chassis	1021
1012.	Component Schedule – Front Panel	1022
1013.	Component Schedule – 10V Regulator and Battery Test Circuit	1023
1014.	Component Schedule – Power Amplifier Part B	1024
1015.	Component Schedule – Coupler, Antenna, CU–F1	1025

GENERAL INFORMATION

INTRODUCTION

1. The Receiver–Transmitter, Radio RT–F1/PRC (the RT unit of the Radio Set PRC–F1) is a low power, light weight equipment intended for use by long–range infantry patrols, providing communication on SSB, CW and AM. It is designed primarily for manpack operation. The complete RT unit is panclimatically sealed and operates from a rechargeable nickel–cadmium battery housed in a battery compartment, also panclimatically sealed, at the rear of the unit.

2. The equipment covers a frequency range of 2 to 12 MHz and incorporates digital frequency selection by four front panel decade dials, providing 10,000 channels at intervals of 1 kHz.

3. An 8 ft rod antenna with adjustable loading coil (Coupler, Antenna, CU–F1) is used when the set is employed in the manpack role. End fed and dipole antennas are provided for ground station installation.

4. Additional equipment, covered by separate manuals, is available for conversion to GRC–F2, General Purpose or Vehicle installation. These equipments include a Power Supply, PP–F1 (TELS K 572) and a Coupler, Antenna, CU–F2 (TELS L132). A Regulator, Battery Charger, F1 (TELS K 562) is available for recharging the nickel–cadium battery.

5. Five modes of operation are available, and may be selected by a front panel control (Mode Switch):–

SSB	Single (upper) sideband with suppressed carrier.
CW1	Equivalent to 2 kHz tone telegraphy over single sideband.
CWN	Transmission is in the CW1 mode. Reception utilises a narrow bandpass filter to reduce adjacent channel interference.
CW2	Keyed carrier, with BFO for reception.
AM	Carrier and upper sideband (compatible AM) transmission. Normal AM reception.

6. On-off and high-low power switching, and a special tune facility are provided by a Power Switch, whose functions are as follows: –

OFF	Disconnects power from the RT unit.
TUNE	Provides a tuning tone for antenna tuning and matching.
LO	Sets the power amplifier for 1W output on all modes.
HI	Sets the power amplifier for 10W output on SSB and AM, or 5W on CW.

7. When the power switch is in the OFF position the internal coupling circuit is automatically earthed to protect the RT unit against damage from high power transmitters at close range.

8. Switching between the receive and transmit conditions is accomplished by four latching relays. These are pulsed into the receive or transmit states by a relay drive circuit, energised by the telegraph key or the pressel switch on the microphone or handset.

9. The radio set is powered by a 28V dc source either internal or external. The power output stage of the transmitter (on high power) and the transmit-receive relays use 28V, but all other sub-units within the set use a regulated 10V supply, derived from the 28V supply.

10. Sidetone is provided for all modes of transmission. The circuitry is arranged so that sidetone is only present in the earpiece when RF power is being delivered by the transmitter.

11. The output stage is coupled to the antenna by tuning and matching circuits, adjusted by front panel controls. Correct matching is indicated when a variable frequency tuning tone is reduced to its lowest frequency.

12. Delayed automatic gain control (AGC) is used in the receiver. Automatic level control (ALC) is used in the transmitter.

13. A whisper–speech facility allows either low level or normal level speech to produce normal transmitter output. This facility is controlled by the WHISPER–SPEECH–BAT switch, the third position of which tests the battery by lighting a front panel lamp when the battery has sufficient energy to operate the radio set.

14. All frequency dependent circuits are automatically set by the frequency setting decade dials on the front panel.

ARRANGEMENT OF EQUIPMENT

Layout of Controls

15. The front panel controls are shown in Fig 1 and their functions are listed in Table 1 below.

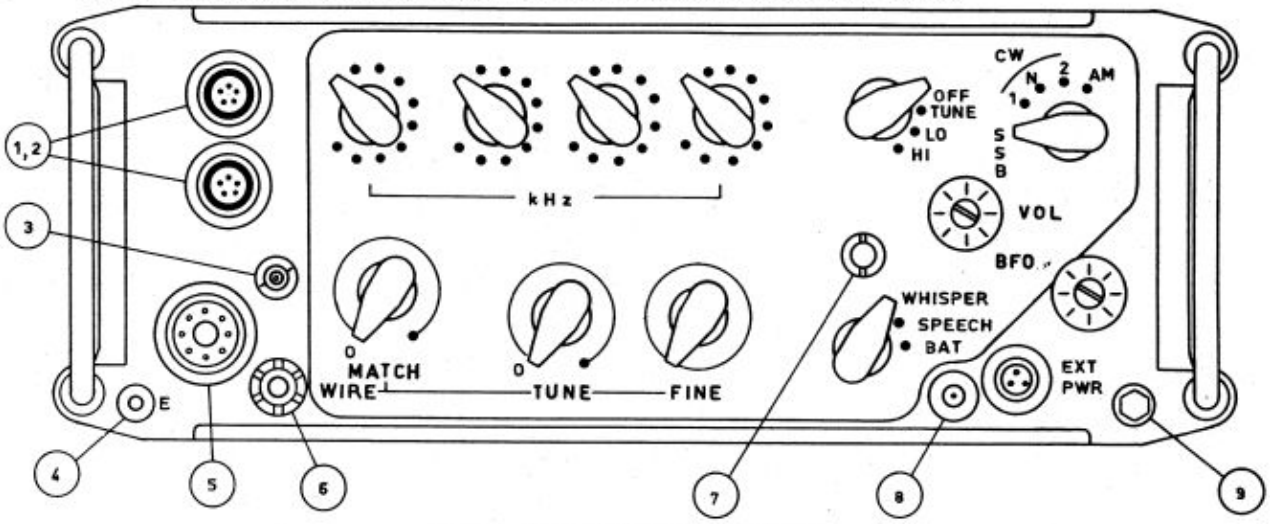

FIG 1 – FRONT PANEL CONTROLS

TABLE 1 – FUNCTIONS OF FRONT PANEL CONTROLS

Control or Connector	Function
kHz	Four switches for setting the assigned frequency in kHz, reading from left to right.
OFF – TUNE – LO – HI (Power Switch)	OFF: Disconnects the battery supply from the RT unit. TUNE: Energises a tone oscillator to provide an audible indication of correct tuning. LO: Adjusts transmitter for low power output. HI: Adjusts transmitter for high power output.
(1 SSB – CW(N – AM (2 (Mode Switch)	SSB: Upper sideband speech communication. CW1: Equivalent to 2 kHz tone telegraphy over SSB channel. CWN: 425 Hz bandwidth on receive. CW2: 6 kHz receiver bandwidth and BFO. AM: 6 kHz bandwidth. Compatible AM transmission, normal AM reception.
VOL	Volume control for reception.
BFO	Beat frequency pitch control used with CW2 reception.
WHISPER – SPEECH – BAT	WHISPER: Allows low level speech to produce normal transmitter output. SPEECH: Requires normal level speech to produce normal transmitter output. BAT: Checks condition of internal battery by lighting a pilot lamp when battery charge is satisfactory.
MATCH	Adjusts output matching to dipole or end fed wire antenna. NOTE: Set to O when using 8 ft rod antenna.
TUNE	Tunes reactive component of antenna circuit. NOTE: Not used with 8 ft rod antenna.
FINE	Fine control for TUNE.
EXT PWR	Connector for Power Supply PP–F1. NOTE: The dummy plug must be inserted when the external Power Supply is not used, to complete the connection between internal battery and RT unit.

Cont.

TABLE 1 – FUNCTIONS OF FRONT PANEL CONTROLS *(cont.)*

Control or Connector	Function
(1) and (2)	Parallel connectors for handset, microphone or telegraph key.
(3)	RF connector. Used only with Coupler CU–F2. (50 Ohm BNC)
(4)	Earth terminal, for counterpoise or one end of dipole.
(5)	Connector for Coupler CU–F1 and 8 ft rod antenna.
(6)	Connector for end fed wire antenna or one end of dipole.
(7)	Humidity indicator.
(8)	Battery indicator lamp.
(9)	Plug for seal testing.

Layout of Equipment

16. The RT unit, shown in the exploded view (Fig 1001) consists of a front panel with a chassis attached, and a protective case with a battery compartment at the rear. The protective case slides over the chassis and is secured to the front panel by four ¼–28 UNF captive screws at the corners. A synthetic rubber O ring is fitted between the panel and case to provide a panclimatic seal. The battery is mounted on the rear of the protective case, with the battery terminals held against spring contacts. The connections are taken through the rear of the protective case, by heavy duty, silver plated spring contacts which mate with corresponding contacts on the rear of the RT chassis. A rear cover for the battery is held to the protective case by four quick release spring clips, with a synthetic rubber 0 ring between the case and rear cover to form a panclimatic seal.

17. The electrical components are mounted on two main mechanical sections, the front panel and the chassis. These two main sections are held together by six 2 BA screws (three at each side) which pass through holes in the chassis side brackets and screw into lugs projecting from the rear of the front panel.

18. The front panel carries all control knobs and sockets for all external connections. Switch and control designations are engraved on the rear of a perspex panel under the control knobs. The initial letters of the switch positions, and the even numbered figures on the kHz switches are in luminous paint to enable the equipment to be operated in darkness. On the rear of the front panel are mounted the power amplifier assembly, the antenna coupling and matching circuits, the Power and the WHISPER–SPEECH–BAT switches, the VOL and BFO controls and the couplings for the kHz frequency switches. Electrical connections to the remainder of the unit are carried via four multi-way plugs which mate with corresponding sockets mounted on the chassis assembly. The sockets are rigidly attached to the chassis, but the plugs on the front panel are mounted with a small amount of float to allow correct mating.

19. The chassis is a rectangular plate, stiffened by flanges at the front and rear and reinforced by side brackets. Sub-assemblies are mounted on the top side of the chassis, and a shallow tray underneath carries the frequency synthesiser circuits. The arrangement of the RT unit is shown in the exploded view (Fig 1001). All sub-assemblies are constructed on printed circuit wiring boards, which either plug into the main chassis by means of multi-pin connectors, or are mounted in detachable units. Screened compartments are provided for the plug-in circuit boards. The complete list of sub-assemblies is as follows:–

(a) At the top of the chassis, at the left hand rear (viewed from the front), is the 1.4V Regulator, with the RF Bandpass Filters in front of it. These are mounted on the RF Drive Unit. The complete assembly may be removed by undoing four captive screws, accessible below the chassis.

(b) At the left of centre, at the rear, is the RF Amplifier, with adjustable tuning circuits accessible through holes in the screen cover. The range switch and the variable capacitor controls are connected to the front panel kHz controls by self aligning couplings. The RF amplifier may be removed by undoing three captive screws accessible under the chassis.

(c) At the right hand side of the chassis, at the rear, a screened compartment houses the Modulator Board, the Sidetone and Audio Board and the IF Amplifier, AGC and Detector Board. In front of this compartment are four individually screened boxes for the 10 kHz Pulse Generator, the 100 kHz Pulse Generator, the 10V Regulator and the Compression Amplifier and Relay Drive boards. These are all plug-in units, with test jacks at the top for monitoring purposes where necessary. The 4 MHz Master Oscillator is mounted in front of these compartments.

(d) On the extreme right hand side are the IF Filters with the Mode Switch in front. This assembly may also be removed by undoing four captive screws under the chassis.

(e) The Frequency Synthesiser is constructed in a shallow tray which mounts under the chassis. It is hinged at one side, to allow access to the underside of the chassis which carries the wiring to the sockets, the transmit-receive relays and the

couplings for the synthesiser frequency controls. The tray is secured to the chassis by four captive 4 BA screws and a locking screw which is accessible through a hole in the chassis side bracket opposite the hinged end. The synthesiser may be removed by releasing these screws, undoing three RF connectors and one wiring connector, and releasing two small screws in the hinges. The tray is divided into 32 screened compartments in which the sub–assemblies are mounted horizontally on spacers. These sub–assemblies are also printed circuit wiring boards.

(f) At the front centre of the chassis is a framework carrying the couplings and gears which connect the RF amplifier and frequency synthesiser tuning circuits to the kHz control knobs. The couplings and bevel gears are of moulded Delrin. All couplings have location slots for correct alignment, and in the case of the synthesiser controls, spring loaded locating pins engage in slots in the couplings, so that if the synthesiser tray is closed with the couplings misaligned, the alignment will be automatically corrected when the kHz knobs are rotated through their range.

(g) Two screw-in type silica gel containers are mounted on the chassis behind the tuning couplings.

20. Miniature plug and socket connectors are used throughout for connection between removable sub-assemblies. Spring contact fingers are used where required to ensure good contact between screens and chassis. Gold plating is used on the screening compartments, and the connectors and switch contacts are also gold plated to provide corrosion free connections.

PRINCIPLES OF OPERATION

Method of Modulation, Demodulation and Frequency Translation

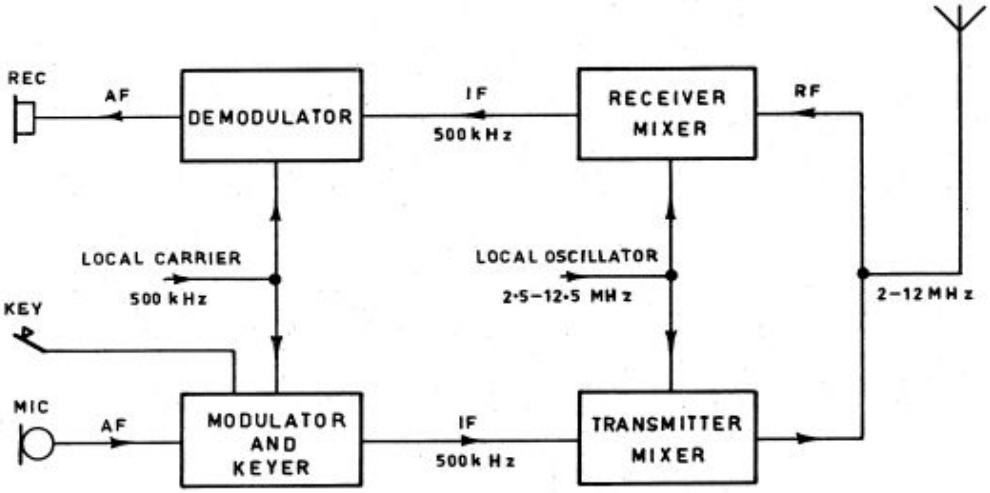

FIG 2 - SIMPLIFIED BLOCK DIAGRAM

21. A simplified block diagram of the RT unit is shown in Fig 2. The 500 kHz local carrier is used for modulation in speech modes, or is keyed in CW modes. The resulting 500 kHz IF is mixed with the local oscillator and the difference frequency forms the the signal for transmission. The same 500 kHz local carrier is used for demodulation in the receiver for SSB and CW modes, AM being demodulated in the normal manner by an envelope detector. The local oscillator is also used for the receiver mixer. The receiver and transmitter frequencies are thus both determined by the local oscillator frequency.

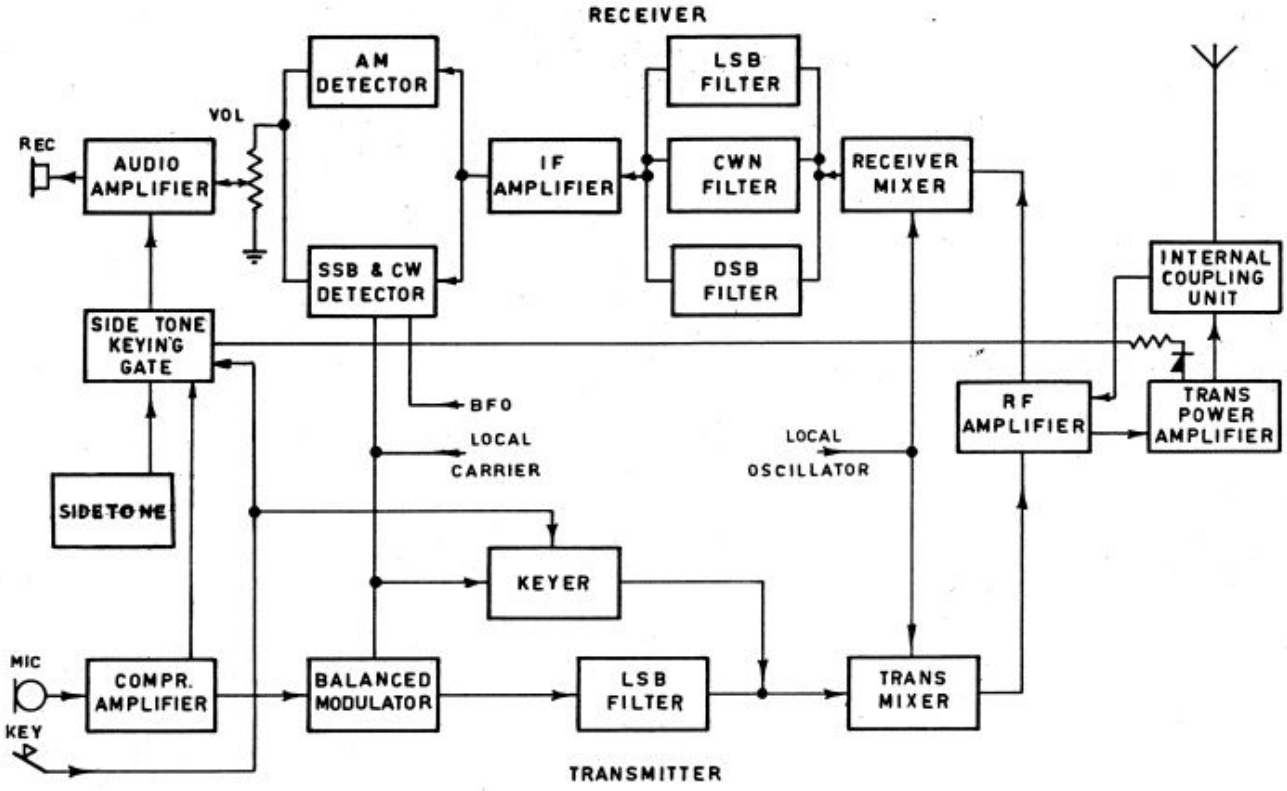

FIG 3 - SIGNAL PATH DIAGRAM

Transmitter Signal Path

22. Referring to the signal path diagram (Fig 3), the microphone signal is processed by a compression amplifier which produces a constant amplitude signal, with some peak clipping. This signal is applied to a balanced modulator where it is mixed with the local carrier, two sidebands appearing at the output. The lower sideband is selected by the lower sideband filter and fed to the transmitter mixer.

23. The lower sideband and the local oscillator signal are mixed in the transmitter mixer and the two mixing products are fed to the RF amplifier (which is common to both receiver and transmitter) and the difference product is selected, amplified and passed to the transmitter driver and power amplifer circuits. The transmitter output is then fed to the antenna coupling circuit (common to both receiver and transmitter) and thence to the antenna.

24. It should be noted that since a difference product is selected by the RF amplifier, the lower sideband presented to the transmitter mixer becomes an upper sideband when presented to the transmitter power amplifier.

25. In the case of CW transmission, where there is no output from the compression amplifier or the balanced modulator, the local carrier is inserted after the lower sideband filter by the CW keyer, which is operated directly by the telegraph key. In AM transmission the keyer serves to insert the local carrier, in this case controlled by the pressel switch on the microphone.

Receiver Signal Path

26. The incoming signal, (Fig 3), is fed to the RF amplifier via the antenna coupling circuit. The RF amplifier, whose correct channel is selected by the front panel decade frequency dials, tunes and amplifies the incoming signal and feeds it to the receiver mixer, where it mixes with the local oscillator frequency to produce a 500 kHz IF signal. It is then switched to one of three bandpass filters (lower sideband, lower sideband narrow, or double sideband) according to the mode of reception. The filtered signal is then amplified and passed to the detector circuits.

27. The detector used depends again on the mode of reception. In the case of AM, a normal envelope detector is used. For SSB, CW1 or CWN, an SSB detector is used with the local carrier for demodulation. For CW2, a variable frequency BFO takes the place of the local carrier. The detected signal is fed via the VOLUME control to an AF amplifier and thence to the earpiece.

Sidetone

28. In speech modes, the output from the compression amplifier is fed to the receiver AF amplifier via gating circuits which allow the sidetone to be heard in the earpiece when the transmitter is operating normally. In CW modes a sidetone oscillator provides the sidetone signal, which is fed to the AF amplifier via the same gating circuits as are used for the speech modes.

Frequency Generation System

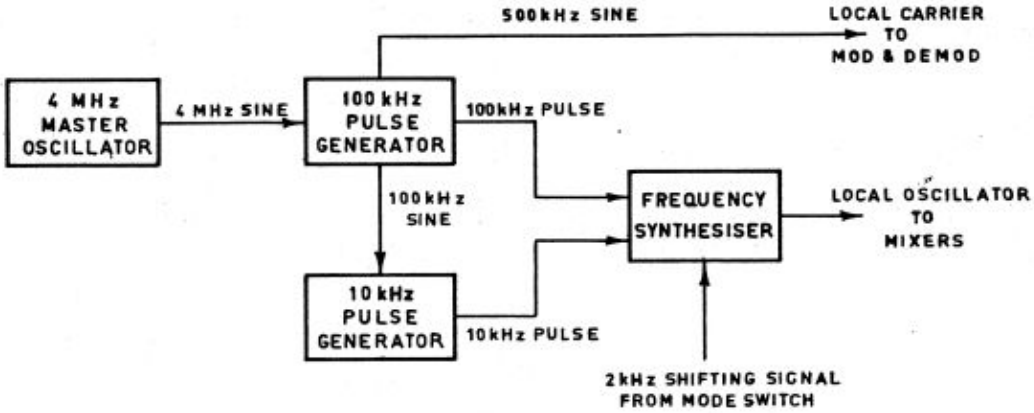

FIG 4 - BLOCK DIAGRAM OF FREQUENCY GENERATION SYSTEM

29. The initial frequency generator is a 4 MHz master oscillator. The 4 MHz sinusoidal output of this oscillator is applied to a 100 kHz pulse generator from which three outputs are taken. The first is a 100 kHz pulse which has a high harmonic content, and forms one of the two pulse inputs to the synthesiser. The second output from the 100 kHz pulse generator is a 500 kHz sine waveform which is used as the local carrier for both receiver and transmitter. The third output from the generator is a 100 kHz sine waveform, used to drive a 10 kHz pulse generator, the output of which forms the second input to the synthesiser.

30. The frequency synthesiser produces the local oscillator signal used in both transmitter and receiver mixers. The output frequency of the synthesiser is controlled by four decade frequency dials on the front panel of the RT unit.

31. Under the assigned frequency system of channel allocation, the assigned frequency corresponds to the approximate centre of the radiated frequency spectrum. In the AM (double sideband) and CW modes, the assigned frequency corresponds to the carrier. For SSB transmission, the upper sideband only is radiated and the frequency corresponding to a 2 kHz tone on the upper sideband is taken as the nominal centre of the radiated SSB spectrum.

Frequency Synthesiser (Fig 6)

32. The Frequency Synthesiser produces the local oscillator signal for the heterodyne mixers in the RT unit. The synthesiser frequency may be set by means of four front panel switches to any multiple of 1 kHz between 2,500 and 12,499 kHz. This in turn gives the RT unit 10,000 possible assigned frequencies at multiples of 1 kHz between 2,000 and 11,999 kHz.

33. The synthesiser frequency remains within ±25 Hz of its nominal value over the temperature range −21 to +71°C for 90 days after initial adjustment.

34. The synthesiser is arranged so that the front panel switch settings display the assigned frequency.

35. For transmission in AM or CW modes, the synthesiser output must be equal to the assigned frequency (para 31) plus the IF, i.e., the assigned frequency plus 500 kHz. For transmission in SSB mode however, the synthesiser frequency must be shifted by 2 kHz and will be equal to the assigned frequency plus 498 kHz, in order to give a final transmitted frequency 2 kHz above the suppressed carrier (para 24). The 2 kHz shift in the synthesiser output frequency is controlled by a section of the Mode switch via the Channel Centering Module (para 95). The synthesiser output is related to the mode of transmission or reception as shown in Table 2 below, where X is the assigned frequency in kHz.

TABLE 2 - SYNTHESISER OUTPUT FREQUENCY

	SSB	CW1	CWN	CW2	AM
Receive	X+498	X+498	X+498	X+500	X+500
Transmit	X+498	X+500	X+500	X+500	X+500

36. The desired frequency is produced in the synthesiser as a result of a succession of mixing and filtering operations. A frequency spectrum is first produced from an accurate reference oscillator, and then the desired harmonic is selected by the use of catalytic oscillators. These auxiliary oscillators are essential to the process, although their own frequencies (and therefore their errors) do not appear in the output. The catalytic method is not used for the 1 kHz steps.

Catalytic Oscillators

37. The principle is illustrated with an example shown in Fig. 5.

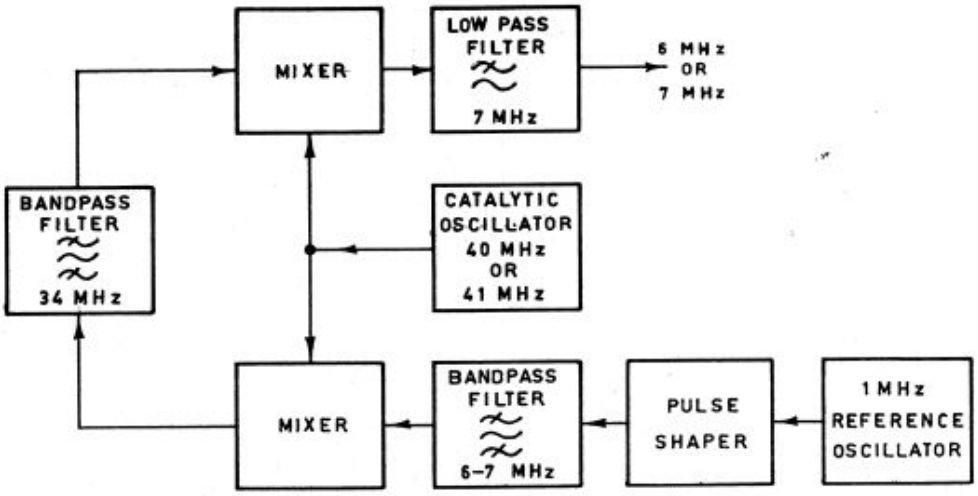

FIG 5 - PRINCIPLE OF CATALYTIC OSCILLATORS

Suppose it is required to derive a 6 MHz and a 7 MHz frequency of high accuracy. Firstly, a 1 MHz oscillator, of the required high accuracy, is used to produce the reference signal. From this signal is produced a train of 1 MHz pulses, rich in harmonics. The harmonics will be 2 MHz, 3 MHz, 4 MHz, etc. As the purpose of the catalytic process is to select the desired harmonic, the pulse train is passed through a filter which eliminates all but the desired harmonics, which in this case are 6 MHz and 7 MHz.

38. These two harmonics are applied to a mixer, and mixed with a catalytic frequency of say 40 MHz (the frequency is not critical) and two sum and two difference products will appear at the mixer output, viz: 46, 47 and 33, 34 MHz. These four components are applied to a filter which selects one component only. In this example, a 34 MHz bandpass filter is chosen, and this passes the 34 MHz difference component, rejecting all the others.

39. This 34 MHz signal is applied to a second mixer, and mixed with the same catalytic frequency. As before, sum and difference products will appear at the output of the mixer viz: 74 MHz and 6 MHz. These frequencies are applied to a filter, whose purpose is to reject the unwanted frequency, and in this case, since 7 MHz is the highest wanted frequency, the filter may be set to cut off immediately above 7 MHz. The filter therefore becomes a 7 MHz low pass filter. Thus the desired 6 MHz harmonic appears at the output of this filter, no other frequencies being present.

40. To derive the 7 MHz harmonic, the frequency of the catalytic oscillator is changed to 41 MHz. The only frequency passing through the 34 MHz filter is now the difference between 41 MHz and 7 MHz. The output of the second mixer is now the difference between 41 MHz and 34 MHz. Thus the output frequency is now 7 MHz.

41. Therefore, the catalytic oscillator method can be used to select a desired harmonic from a train of related harmonics by the simple procedure of changing the catalytic frequency.

42. The accuracy of the 1 MHz reference oscillator is preserved because the errors in the catalytic oscillator frequency cancel in the same way that the catalytic frequency itself cancels.

43. In the above simple example it was assumed that all mixing was free from intermodulation products, and all filters were perfect. In practice this is not true and much care has to be taken in choosing the oscillator frequencies and filter passbands so that no strong intermodulation products appear in the passbands of the subsequent filters.

Functional Description

44. The functions performed in the synthesiser are illustrated in the block diagram Fig. 6.

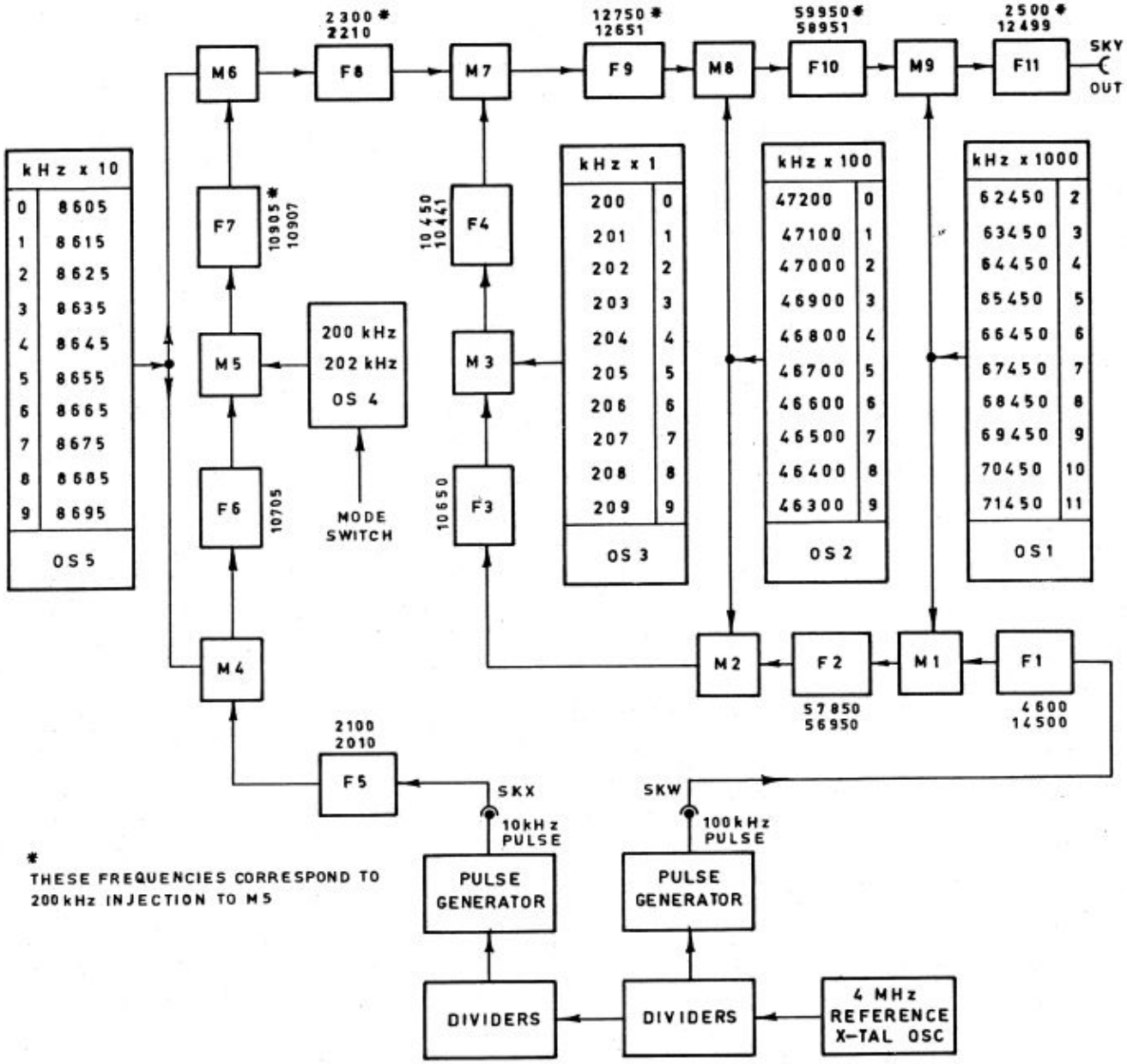

FIG 6 - BLOCK DIAGRAM OF FREQUENCY SYNTHESISER AND ASSOCIATED HARMONIC GENERATION

The blocks shown in this diagram do not necessarily correspond to physical modules in the synthesiser, and it is therefore not possible to refer to them by module numbers. The referencing system used in the following description is introduced for the purpose of this explanation only. The abbreviations are as follows : F = filter, M = mixer, Os = crystal oscillator.

45. An accurate 4 MHz reference frequency is generated by the 4 MHz master oscillator. This frequency is divided by means of synchronised oscillators. The resulting 100 kHz output is used to synchronise blocking oscillators which generate a very sharp 100 kHz pulse. This is fed to the synthesiser via SKW and to the bandpass filter F1, emerging as a spectrum of 100 kHz components between 4,600 and 14,500 kHz. This is then applied to mixer M1 together with the output of the first catalytic oscillator Os1, the Megahertz Selection Oscillator. The megahertz oscillator can be switched by means of a 10 position switch to give frequencies between 62,450 kHz and 71,450 kHz at 1,000 kHz intervals.

46. A spectrum of difference components between 57,850 and 56,950 kHz is selected from the output of M1 by means of the band-pass filter F2, (the components are still 100 kHz apart). This spectrum is again mixed with the output of another catalytic oscillator, the Hundred Kilohertz Selection Oscillator (Os2) which can be switched to any one of ten frequencies between 47,200 and 46,300 kHz at 100 kHz intervals. The output from mixer M2 is fed to filter F3. The pass-band of this filter is 6.8 kHz on either side of 10,650 kHz. This selects the required component from the spectrum. The 10,650 kHz component is mixed in M3 with the output of the Kilohertz Selection Oscillator Os 3, which supplies one of the 10 frequencies between 200 and 209 kHz. The difference frequency is selected by the filter F4, with a pass-band of 10,450 to 10,441 kHz. The signal selected by F4 is then fed to one of the inputs of mixer M7.

47. The second input to mixer M7 is derived as follows. The 10 kHz pulse train from the 10 kHz pulse generator fed via SKX to the band-pass filter F5, emerges as a spectrum of components 10 kHz apart and ranges from 2,010 to 2,100 kHz. This is mixed in M4 with the output of Os 5, another catalytic oscillator - the Ten Kilohertz Selection Oscillator, which can be switched to one of the ten frequencies at 10 kHz intervals between 8,605 and 8,695 kHz. Filter F6 selects from the mixing products of M4 the component at 10,705 kHz. This is then mixed with either 200 or 202 kHz from Os 4, the Channel Centering Oscillator, and the sum component selected by the filter F7. All other components are rejected. The selected component, 10,905 or 10,907 kHz, is passed to mixer M6, where it is mixed with the catalytic frequency (8,605 to 8,695 kHz) of the ten kilohertz selection oscillator Os 5. The following filter, F8, passes only the difference component which lies in the band 2,300 to 2,210 kHz. The output from F8 forms the second input to mixer M7.

48. The sum of the two frequencies fed to M7 is selected by filter F9. This frequency, which lies between 12,651 and 12,750 kHz is then successively mixed with the catalytic frequencies of Os 2 and Os 1. The final output is filtered by F11 and lies between 2,500 and 12,499 kHz. The frequency of the output signal will depend on the setting of the catalytic oscillators Os 1, Os 2, Os 5 and the oscillators Os 3 and Os 4. The output is independent of errors in the catalytic oscillator frequencies. If the errors in the frequencies of Os 3 and Os 4 are equal, they will cancel, therefore, these oscillators are specially arranged to have closely matched frequency/temperature characteristics to minimise the error they contribute.

49. Numerical Example:- Error cancellation is best observed by considering the frequencies at the outputs of every filter in the system. Assume that the dial setting is 6,372 kHz and the mode switch is at AM. (The synthesiser output should be 6,872 kHz to allow for 500 kHz IF of the set). Let the error in the frequency of oscillator Os 1 be equal to D_1, that in Os 2 = D_2, that in Os 3 = D_3, etc.

Thus:

Dial Setting -	6	3	7	2	AM
Oscillator Frequency -	66,450	46,900	8,675	202	200 kHz
Oscillator Error -	$+D_1$	$+D_2$	$+D_5$	$+D_3$	$+D_4$

Since the crystals in oscillators 3 and 4 are selected to be within a negligible error of each other at all temperatures,

$$D_3 = D_4$$

TABLE 3 - SYNTHESISER FILTER OUTPUTS

Filter	Output
F1	Spectrum of 100 kHz components between 4,600 and 14,500 kHz.
F2	Spectrum of (66,450 + D_1 - n100) kHz components between 57,850 and 56,950 kHz.
F3	Selected component 10,650 + D_1 - D_2 kHz.
F4	10,448 + D_1 - D_2 - D_3 kHz.
F6	Selected component 10,705 + D_5 kHz.
F7	10,905 + D_5 + D_4 kHz.
F8	2,230 + D_4 + D_5 − D_5 kHz. D_5 cancels out.
F9	12,678 + D_1 − D_2 − D_3 + D_4 kHz. D_3 cancelled by D_4.
F10	59,578 + D_1 − D_2 + D_2 kHz. D_2 cancels out.
F11	6,872 + D_1 − D_1 kHz. D_1 cancels out.

Power Distribution System

50. In the manpack role the 28V internal battery connection is looped through SKA by the dummy plug. When the set is used in conjunction with the Power Supply, PP-F1, one input to SKA is used for operating the radio set and the other for charging the internal battery (Fig 7).

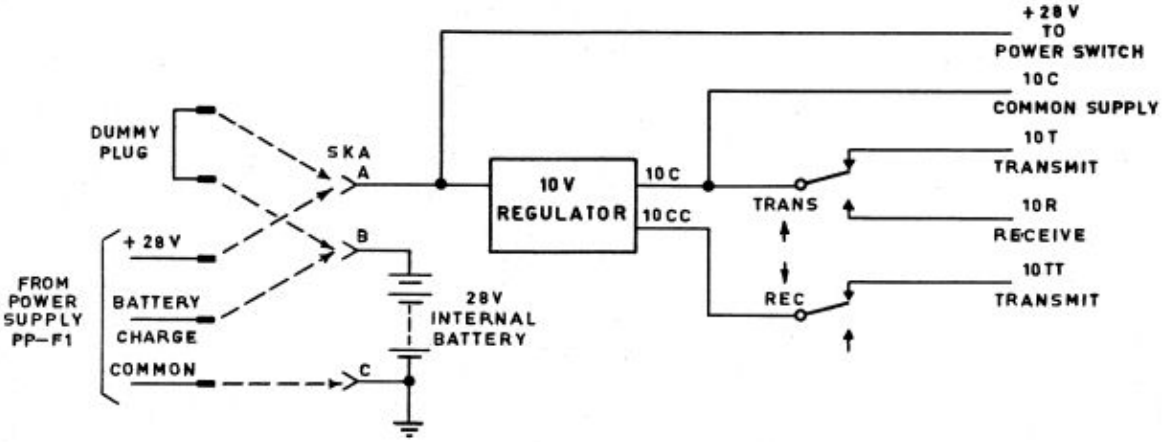

FIG 7 - BLOCK DIAGRAM OF POWER DISTRIBUTION SYSTEM

51. Within the RT unit, the 28V is fed to the relay coils and transmitter PA via the Power switch. All other sub-units within the set operate on 10V. This 10V supply is provided by a 10V regulator, operated from the 28V supply. Two outputs are available from the regulator, designated 10C and 10CC. The 10C supply is used for all sub-units within the set which operate on both transmit and receive. It is therefore a continuously operating supply.

52. The 10CC supply, which has a higher current capability and higher ripple content than the 10C supply, is used in the transmit condition only, and is disconnected on receive. It is fed to the transmitter via a set of contacts on the transmit-receive relays.

53. The 10C supply is also fed through a set of contacts on the transmit-receive relays and two more 10V supplies are derived, 10T and 10R, which are used on transmit and receive respectively. These are used to supply sub-units within the set which are required to operate in either transmit or receive condition, but not in both.

DETAILED TECHNICAL DESCRIPTION

4 MHz MASTER OSCILLATOR

General

54. The Master Oscillator is a temperature compensated crystal controlled 4 MHz frequency source. The unit is completely sealed; in the event of a fault occurring, the entire unit must be replaced and the faulty oscillator returned to the manufacturers. At the underside of the can, provision is made for fine frequency adjustment over a range of approximately 40 Hz. The oscillator does not deviate by more than 8Hz from 4 MHz over the temperature range of −21°C to +71°C.

Offset Frequency

55. This is the frequency in Hz above or below 4 MHz to which the oscillator is initially adjusted so that its frequency of oscillation over the temperature range −21°C to +71°C does not deviate by more than 8 Hz from 4 MHz. The temperature at which the initial adjustment is made is +20°C, and the value of offset frequency in Hz is marked on the top of the oscillator can.

100 kHz PULSE GENERATOR BOARD *(Fig 8)*

General

56. This board supplies a sinusoidal output at 500 kHz to drive the modulator and detector, another sinusoidal output at 100 kHz to drive the 10kHz pulse generator and also provides a 100 kHz pulse train for the frequency synthesiser. The three outputs are of the same frequency accuracy as the 4 MHz master oscillator.

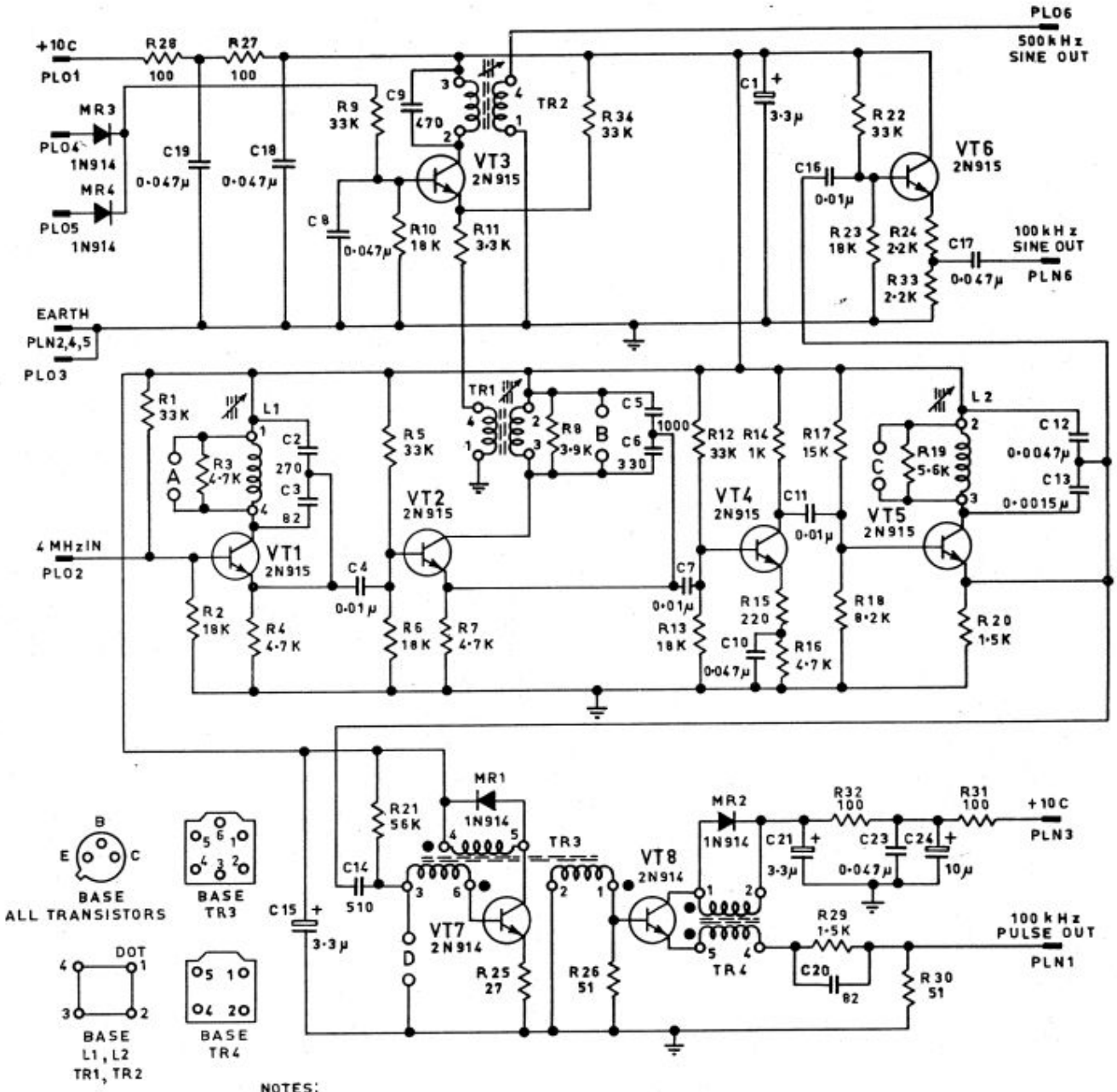

NOTES:
ALL CAPACITOR VALUES IN PICOFARADS UNLESS OTHERWISE MARKED.
ALL RESISTOR VALUES IN OHMS UNLESS OTHERWISE MARKED.
CIRCUIT PREFIX B

FIG 8 - 100 kHz PULSE GENERATOR

57. The 4 MHz signal is divided down in frequency by means of two locked oscillators to produce the 500 kHz sinusoidal output required. By further division, using a locked oscillator stage, a sinusoidal output at 100 kHz is obtained. Two blocking oscillator stages, one a trigger stage and the other a pulse shaping stage, then produce the required synchronised 100 kHz pulse train.

Locked Oscillator and Buffer Stages

58. The first locked oscillator stage of the module, comprising VT1 and associated components, is a tuned L-C oscillator employing collector to emitter feedback; it oscillates near 2 MHz when unlocked. The oscillator is frequency locked by the signal from the 4 MHz master oscillator fed to the base of VT1 via PLO2. The first stage thus produces a frequency division of two.

59. The 2 MHz output of the first stage locks the next stage via C4. This stage is similar to the first except that its natural oscillation frequency is near 500 kHz and hence it produces a frequency division of four in the locked condition. One output, taken from the secondary of TR1, is fed to the isolating amplifier VT3, which produces a sinusoidal output by virtue of the tuned circuit in its collector. This output, which appears at PLO6, is used for modulating and detecting elsewhere in the RT unit.

60. The other output of the divide by four stage, taken from the emitter of VT2, is fed to the isolating amplifier VT4. This stage prevents interaction between the preceding and following locked oscillators.

61. The 500 kHz output from the collector of VT4 locks the following locked oscillator via C11. This stage, a tuned L-C oscillator similar to the first two stages, has a natural oscillating frequency near 100 kHz and provides a frequency division of five when locked.

62. The sinusoidal 100 kHz signal from the emitter of VT5 is isolated in the next stage by the emitter follower VT6 which provides an output at PLN6 to drive the 10 kHz pulse generator board. The output from VT5 also provides a synchronising signal for the blocking oscillator VT7.

63. To enable individual circuit adjustments and measurements to be made, oscillating stages may be disabled by the use of the shorting pins A, B, C and D.

Blocking Oscillator Stages

64. The following stage of the module comprises the blocking oscillator VT7 and associated components. This oscillator is of the common emitter configuration employing base control. In the absence of an output signal from VT5, VT7 is a free-running blocking oscillator with a pulse repetition frequency near 100 kHz, determined principally by the base biasing network R21/C14. The output signal from VT5 synchronises VT7 and a 100 kHz pulse train is produced.

65. The trigger pulse generated by VT7 is applied to VT8 by the third transformer winding (1,2) of the pulse transformer TR3. VT8 is a common-base blocking oscillator, giving a short-duration pulse output at PLN1.

66. Diodes MR1 and MR2 protect transistors VT7 and VT8 by discharging the magnetising currents in the primary windings of TR3 and TR4 when the transistors turn off. When VT7 and VT8 turn on, the electrolytic capacitors C15 and C21 prevent feedback of transients to preceding stages. Network R29/C20 is a pulse shaping circuit. Resistors R26 and R30 provide the correct input and output impedances respectively for the last stage. The supply bypass networks R27/28, C18/19 and R31/32, C23/24 prevent unwanted frequencies from reaching other modules in the set.

10 kHz PULSE GENERATOR BOARD (Fig 9)

General

67. This board produces a 10 kHz pulse train for the frequency synthesiser. The output has the frequency accuracy of the 100kHz input derived from the 100 kHz pulse generator board and hence that of the 4MHz master oscillator.

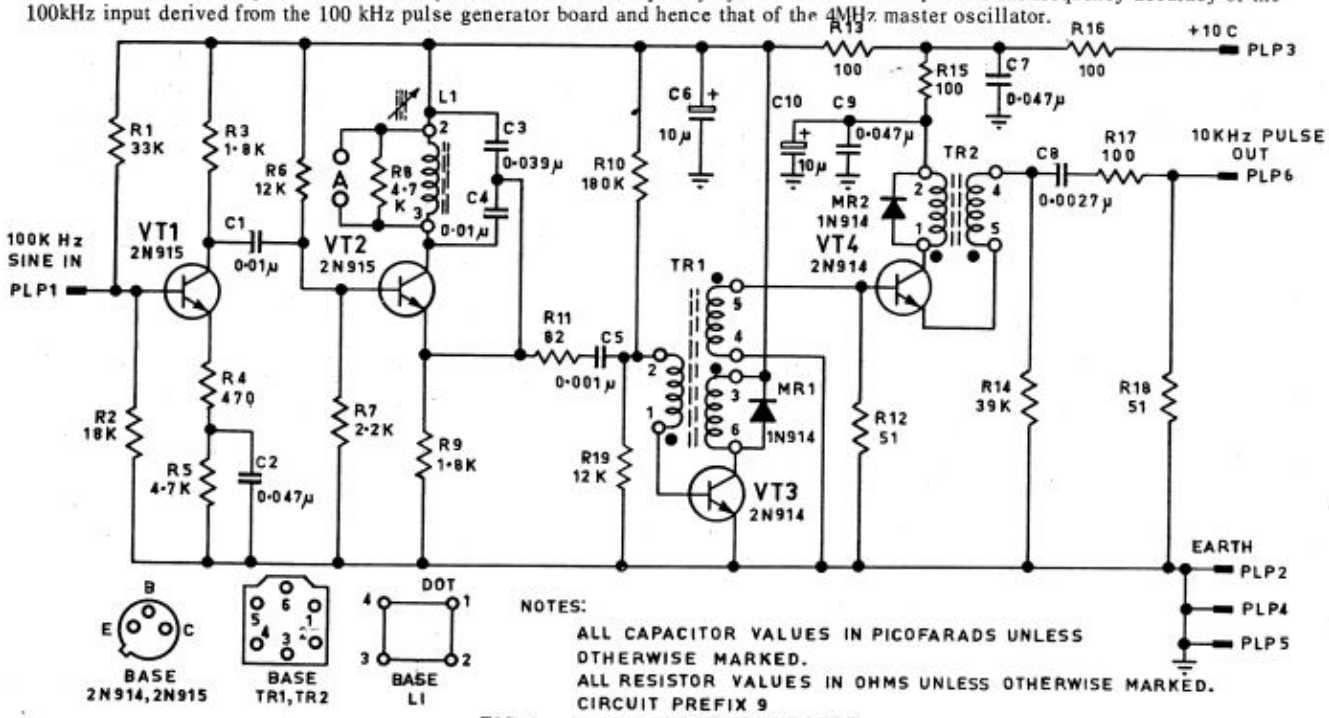

FIG 9 - 10 kHz PULSE GENERATOR

68. The 100 kHz sinusoidal input is amplified and then divided down to 20 kHz by means of a locked oscillator stage. A blocking oscillator then provides a synchronised 20 kHz trigger pulse for the final blocking oscillator stage which triggers on every second pulse to give a pulse train at 10 kHz.

Amplifier and Locked Oscillator Stages

69. The 100 kHz sinusoidal signal is amplified in the first stage by VT1, using a common emitter circuit. The output is applied via C1 to the next stage comprising VT2 in a tuned L-C oscillator configuration. This stage employs collector to emitter feedback and oscillates near 20 kHz when unlocked. The oscillator is frequency locked by the 100 kHz signal from VT1 and a frequency division of five is achieved. The signal at the emitter of VT2 provides synchronisation for the following blocking oscillator VT3. A pair of shorting pins, marked A, are located adjacent to L1, to enable bias measurements to be made under non-oscillating conditions.

Blocking Oscillator Stages

70. The following stage of the module comprises the blocking oscillator VT3 and associated components. This oscillator is of the common emitter configuration and provides a pulse output across TR1, synchronised to the 20 kHz output of VT2. The voltage divider R10, R19 sets the base voltage of VT3 just below its turn-on voltage and hence the output from VT2 triggers the blocking action. Resistor R11 limits the base current pulse.

71. A 20 kHz trigger pulse of approximately 2V is fed to the base of VT4 via TR1 (4,5) . This common-base blocking oscillator is designed so that the trigger pulse at the base will only turn on transistor VT4 on every alternate pulse. This is achieved as follows. The voltage at R14/C8 drops to 3V when VT4 turns off and this voltage decays as C8 discharges through R14. These components are selected so that in 50 µS the voltage only falls to approximately 1.8V and hence the next trigger pulse at the base will not turn VT4 on. After 100 µS, the voltage has decayed to approximately 1.3V and consequently every alternate trigger pulse turns VT4 on. This results in a synchronised 10 kHz pulse output at PLP6.

72. Diodes MR1 and MR2 protect transistors VT3 and VT4 respectively by discharging the magnetising currents in the primary windings of TR1 and TR2 when the transistors turn off. When VT3 and VT4 turn off, the capacitors C6, C9 and C10 prevent feedback of transients to preceding stages. The 10V supply is bypassed by R16/C7.

FREQUENCY SYNTHESISER *(Fig 1003)*

General

73. The synthesiser is made up of a number of small circuit modules, some of which correspond to the function blocks in the block diagram Fig 6. In the above functional explanation of the synthesiser, all isolating and amplifying processes were left out for clarity. Each module is designated with a module number and, for ease of reference the simplified block diagram designations are given in brackets where applicable.

100 kHz Input Filter 10-1Q1 (F1)

74. A spectrum of 100 kHz components between 4,600 and 14,500 is required as one of the synthesiser inputs. This is formed from the 100 kHz pulse waveform by the input bandpass filter. The filter is a three-stage lowpass network in which the attenuation has reached 10 dB at 17,500 kHz. Attenuation of the frequencies below 4,600 kHz is accomplished by the small input and output capacitors. The input and output impedance is 50 ohms.

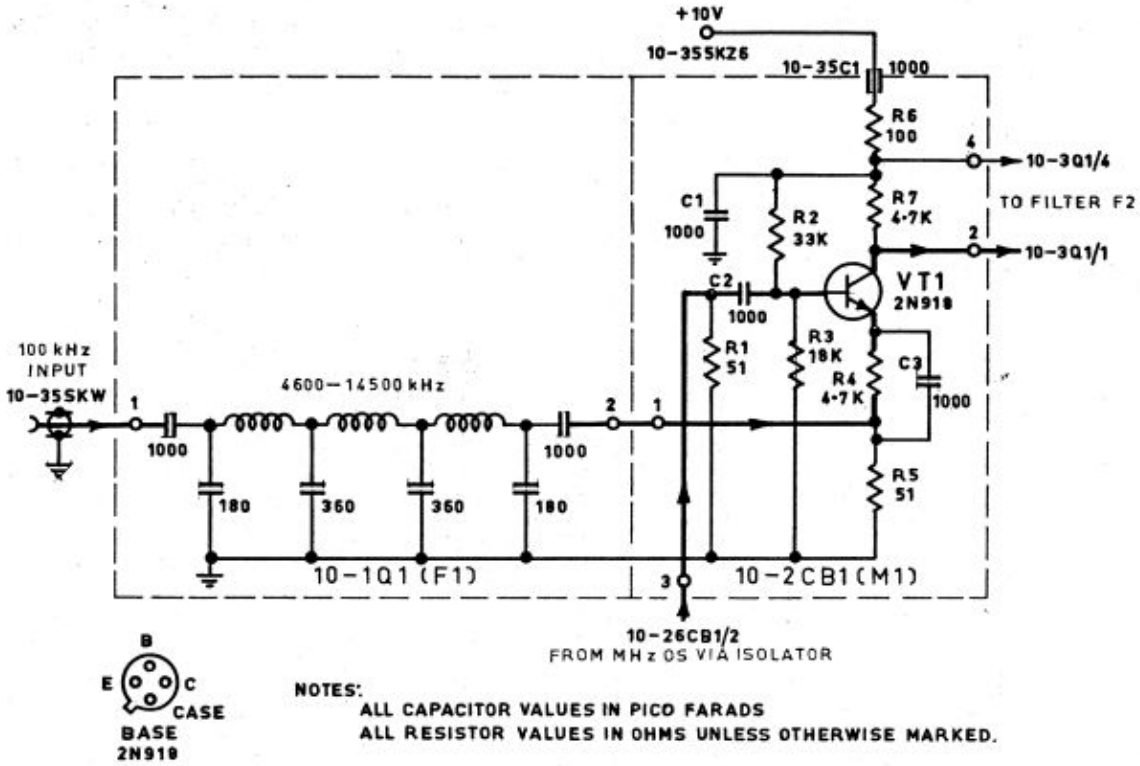

FIG 10 - 100 kHz INPUT FILTER F1 AND MIXER M1

First Mixer 10-2CB1 (M1)

75. The high level signal input to this mixer is supplied from the MHz selection oscillator via the isolation stage module 10-26CB1 at a level of about 250 mV. The frequency of the high level signal is between 62,450 and 71,450 kHz. The low level signal is the spectrum of 100 kHz components from the filter module 10-1Q1. The portion of this spectrum used in the synthesis process is from 4,600 kHz to 14,500 kHz. The output from the mixer is coupled into module 10-3Q1 which is a bandpass filter with a nominal passband 57,850 - 56,950 kHz which suppresses all but the difference components of the mixer output. The filter input impedance is 4k ohms. There is a dc connection between the collector of VT1 and the filter components.

Megahertz Selection Oscillator 10-25CB1 (Os 1)

76. This is a grounded base oscillator, the frequency of which is controlled by one of the ten crystals (X1 to X10) selected by the megahertz switch. The selected crystal (operating in the series resonant mode) is in the feedback path between the tuned circuit (L1, C3, C4, R4) in the collector, and the emitter of the transistor. Inductor L2 is in shunt with the crystal to tune out the shunt capacitance. Capacitors C5 to C14 are used to peak the tuned circuits at the resonant frequency of their associated crystals. The output from this oscillator is taken from the collector directly to the two isolating stages in modules 10-26CB1 and 10-27CB1. The frequency error must never exceed 4 kHz. Typically, the error is less than ±2 kHz. The small coupling capacitors 26C4, 27C4 and the grounded base isolating stages contribute to the tuning of the oscillator tuned circuit. The output cannot be measured at the collector of the transistor as any sensing probe would de-tune the output circuit. Therefore, the output of the oscillator must be measured at the output of the isolating stage only, in this case at the end of C5 remote from VT1 in module 10-26CB1.

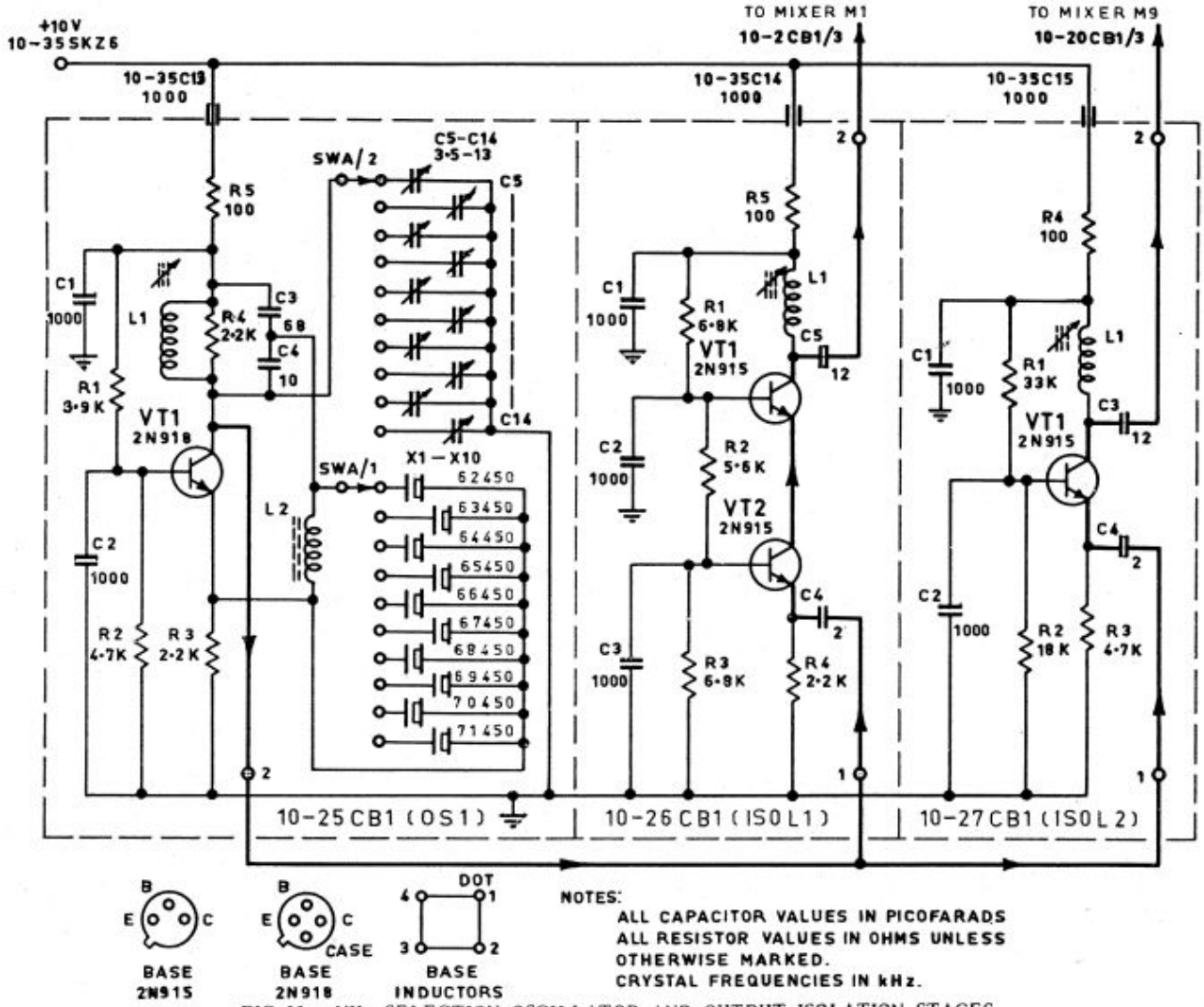

FIG 11 - MHz SELECTION OSCILLATOR AND OUTPUT ISOLATION STAGES

First Isolating Stage 10-26CB1

77. This isolation stage performs two important functions. Firstly, it presents a high input impedance to the megahertz selection oscillator, while its output matches the input impedance of the mixer. Secondly, in conjunction with the second isolating stage (Module 10-27CB1), it provides isolation between the two mixers fed by the megahertz oscillator so that no break-through of the input spectrum occurs in the output of the synthesiser, to cause spurious responses. The isolating stage uses two grounded base transistors connected in series to achieve the high isolation between output and input. The signal from the collector of the megahertz oscillator is connected via the series capacitor C4 to the emitter of VT2 in the isolating stage. Capacitor C4 is a high impedance at the oscillator frequency and thus provides a current drive to the emitter of transistor VT2. The base of transistor VT2 is grounded by capacitor C3, and the collector is connected to the emitter of VT1. The base of VT1 is grounded by C2, and the collector is connected to the tuned circuit comprising inductor L1 capacitor C5 in series with the load impedance presented by the mixer module 10-2CB1. Inductor L1 is adjusted to resonate at the centre of the band of megahertz oscillator frequencies, i.e., about 66,950 kHz.

Second Isolating Stage 10-27CB1

78. This circuit uses transistor VT1 in grounded base connection to achieve isolation between input and output. The input from the megahertz selection oscillator is via coupling capacitor C4, which is a high impedance at the frequency of operation, and thus provides a current drive to the emitter of VT1. The base of VT1 is grounded by C2 and the collector is connected to the tuned circuit comprising inductor L1 and capacitor C3 in series with the load impedance presented by the final mixer, module 10-20CB1 (M9). Inductor L1 is adjusted to resonate at the centre of the band of megahertz oscillator frequencies, i.e., about 66,950 kHz.

Band-Pass Filter 10-3Q1 (F2)

79. This filter has a nominal pass-band extending from 57,850 to 56,950 kHz. The filter has an input impedance of 4k ohms and an output impedance of 220 ohms. The 3 dB cut-off points lie at approximately 56,000 kHz and 59,000 kHz. The rejection below 49,500 kHz and above 65,500 kHz is greater than 60 dB. The insertion loss within the pass band does not exceed 2 dB.

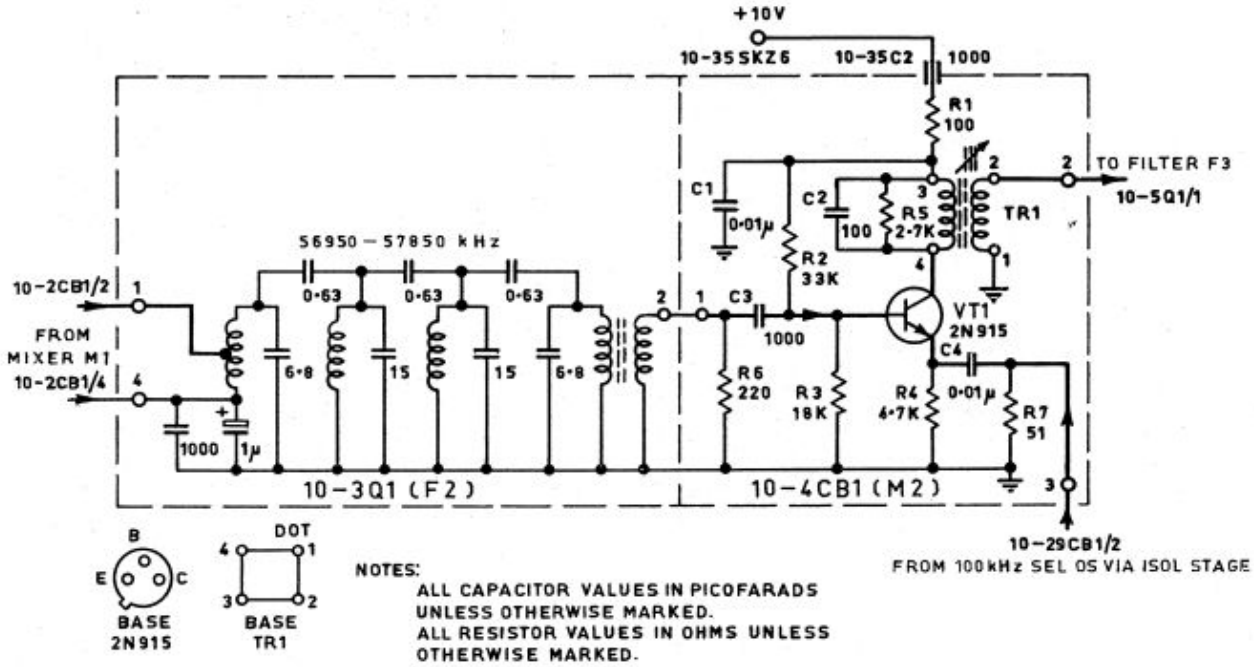

FIG 12 - BP FILTER F2 AND MIXER M2

Second Mixer 10-4CB1 (M2)

80. The high level signal input to this mixer is about 140 mV and comes from the isolation stage module 10-29CB1. The low level signal input is from filter module 10-3Q1. The input frequency is from 46,300 to 47,200 kHz for the high level signal and a spectrum from 56,950 to 57,850 kHz for the low level signal. The mixer output is taken from transformer TR1 and fed to the narrow band crystal filter (F3) on module 10-5Q1 which suppresses all the components of the resulting spectrum except the component at 10,650 kHz.

Hundred kHz Selection Oscillator 10-28CB1 (Os 2)

81. This is a grounded base oscillator, the frequency of which is controlled by one of ten crystals (X1 to X10), selected by the 100 kHz switch. The selected crystal (operating in series-resonant mode) is in the feedback path between the tuned circuit (L1, C3, C4, C5, R4) in the collector, and the emitter of the transistor. The tuned circuit is peaked at 47,200 kHz. The output of this oscillator is taken from the collector, directly to the two isolating stages in module 10-29CB1 and 10-30CB1. The frequency error must never exceed ±2.8 kHz. Typically, the error is less than ±1.4 kHz. The small coupling capacitors 29C4 and 30C4, and the grounded base isolating stages contribute to the tuning of the oscillator output circuit. (The output level cannot be measured at the oscillator output, as any sensing probe would detune the oscillator.) Therefore, the output of the oscillator must be measured at the output of the isolating stage only, in this case at the end of C5 remote from VT1 in module 10-29CB1.

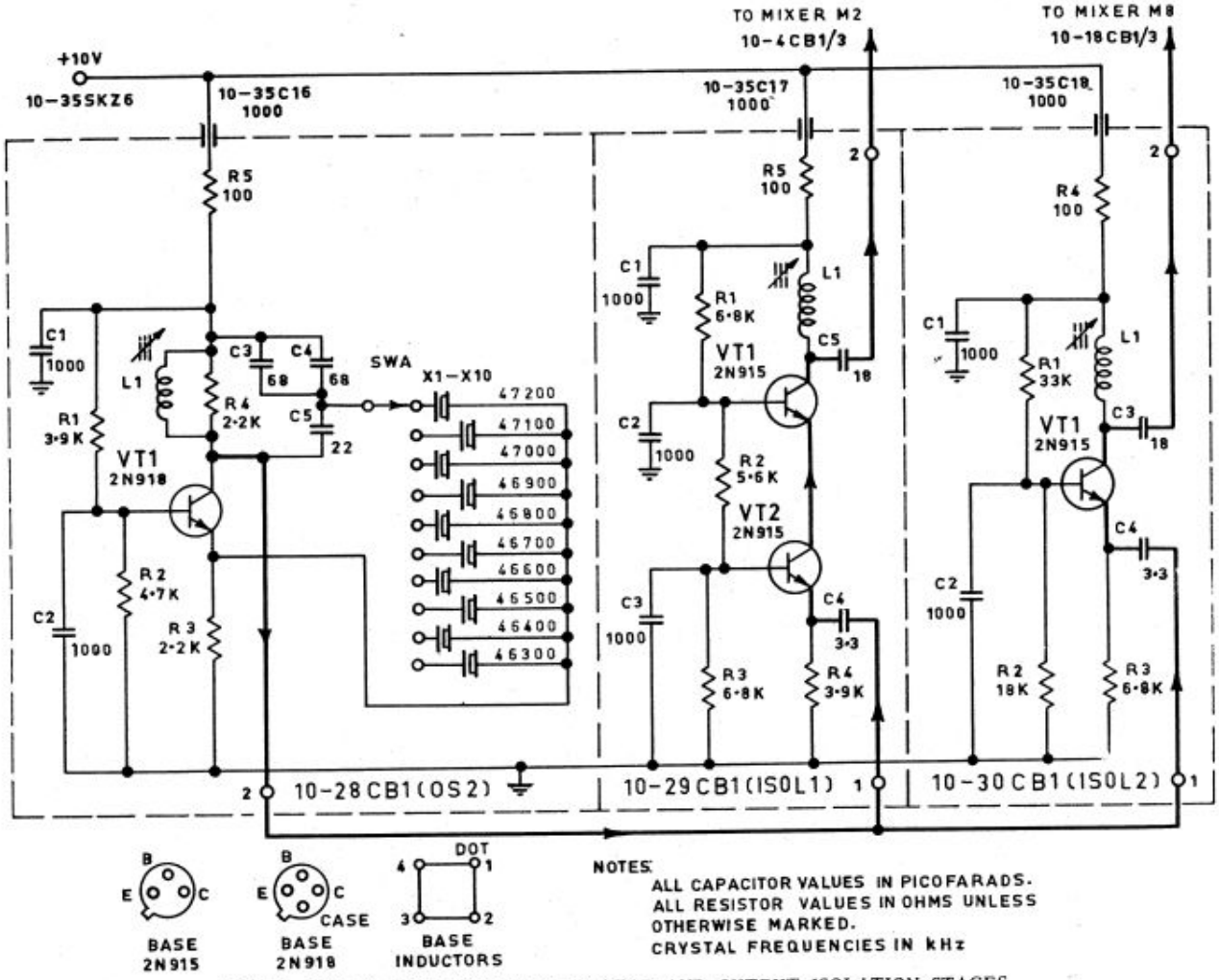

FIG 13 - 100 kHz SELECTION OSCILLATOR AND OUTPUT ISOLATION STAGES

First Isolating Stage 10-29CB1

82. This isolation stage performs two important functions. Firstly, it presents a high input impedance to the output of the hundred kHz selection oscillator, while its output matches the mixer M2. Secondly, in conjunction with the second buffer stage (module 10-30CB1) it provides isolation between the two mixers fed by the hundred kilohertz oscillator, so that no unwanted components break through between mixer 2 (module 10-4CB1) and mixer 8 (module 10-18CB1). The circuit uses two transistors (VT1, VT2) in grounded base series connection, to achieve the high isolation required between the input and output. This stage is very similar to that on module 10-26CB1. Signal from the hundred kHz oscillator is applied via the series coupling capacitor C4, providing current drive for VT2 emitter. The output is taken from capacitor C5 to module 10-4CB1 (second mixer). The load presented by the mixer in series with capacitor C5 resonates with the inductor L1 at approximately the centre of the band of operating frequencies, 46,700 kHz.

Second Isolating Stage 10-30CB1

83. This circuit uses one transistor in grounded base connection to provide isolation between input and output. It is very similar to the isolating stage on module 10-27CB1. It is coupled via C4 from the oscillator on module 10-28CB1. The emitter of transistor VT1 is current-driven via C4, its base is grounded by C2. The output is taken to the mixer (module 10-18CB1) via capacitor C3, which together with L1 forms a tuned circuit in the collector of VT1. The circuit is tuned to approximately the mid-range frequency, 46,700 kHz. The output from this stage is about 140 mV under normal drive and load conditions.

Kilohertz Selection Oscillator Module 10-31CB1 and 31CB2 (Os 3)

84. The transistor VT1 of this crystal controlled oscillator is connected in a common emitter configuration. The secondary winding of the output transformer TR1 provides the feedback to the base of the transistor via one of the ten crystals and associated series capacitors, selected by the Kilohertz switch. Each crystal has a trigger capacitor of about 30 pF in series with it, so that the circuit operates near the nominal parallel resonance, i.e., the crystals are standard 30 pF crystals, even though they perform the function of a series element in the feedback loop. The transformer TR1 is tuned slightly above 200 kHz with capacitor C22 and the secondary winding is connected so as to provide the 180° phase shift required for oscillation to take place. The output is taken from the secondary of TR1 and is fed to the mixer stage on module 10-6CB1. The output level is about 140 mV.

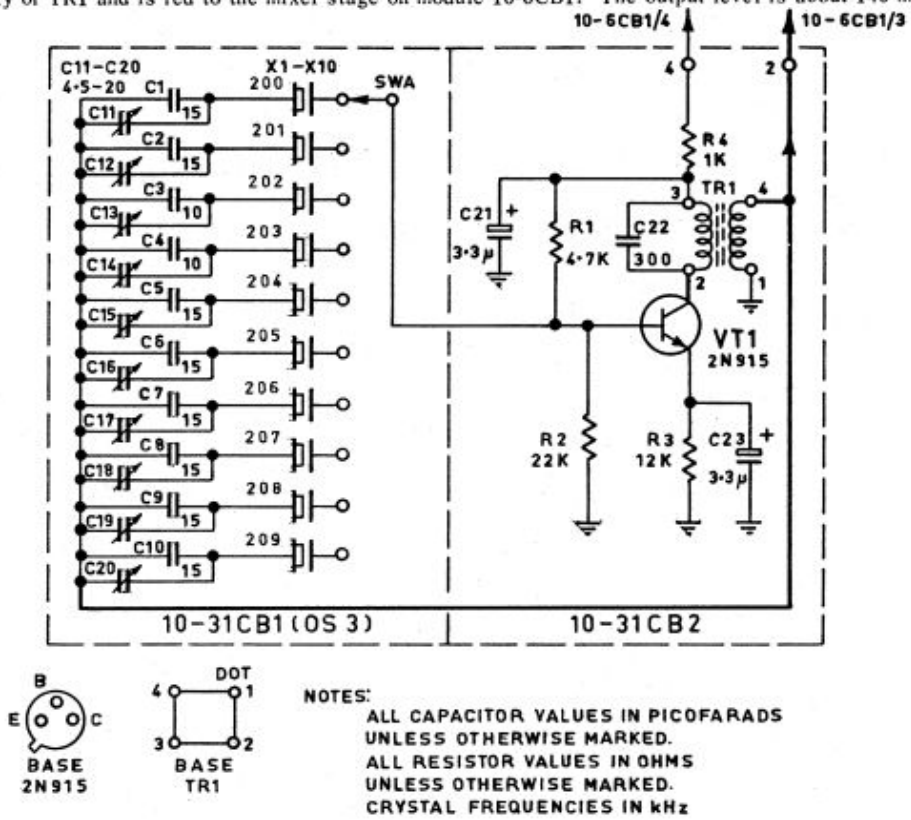

FIG 14 - kHz SELECTION OSCILLATOR

The frequencies of the kilohertz selection oscillator are all adjusted to within ±0.2 Hz of their nominal values at 20°C. The two frequencies (200 and 202 kHz) of the channel centering module 10-12CB1 are also set to within ±0.2 Hz of their nominal values (para 95). The crystals used in both the kilohertz selection oscillator and the channel centering oscillator are produced as a matched set with nearly identical frequency/temperature characteristics. Therefore, as the temperature changes from 20°C, the frequency of the kilohertz selecting oscillator and the frequency of the channel centering oscillator drift in the same direction by approximately the same amount. As these oscillators are arranged so that their difference frequency contributes to the synthesiser output frequency, these errors cancel one another. The maximum error introduced into the synthesiser output frequency due to differential frequency changes between the oscillators, is not more than 6 Hz.

Crystal Filter 10,650 kHz 10-5Q1 (F3)

85. This crystal filter has a ripple of less than 1 dB between 10,643.2 and 10,656.8 kHz. The 60 dB points lie ±45 kHz from the centre frequency of 10,650 kHz. Insertion loss in the pass band is between 1.3 and 2.3 dB. The filter operates from the impedance presented by a 1k ohm (±10%) resistor in parallel with a 28 pF(±5%) capacitor. It also operates into a 1k ohm resistor in parallel with a 28 pF capacitor.

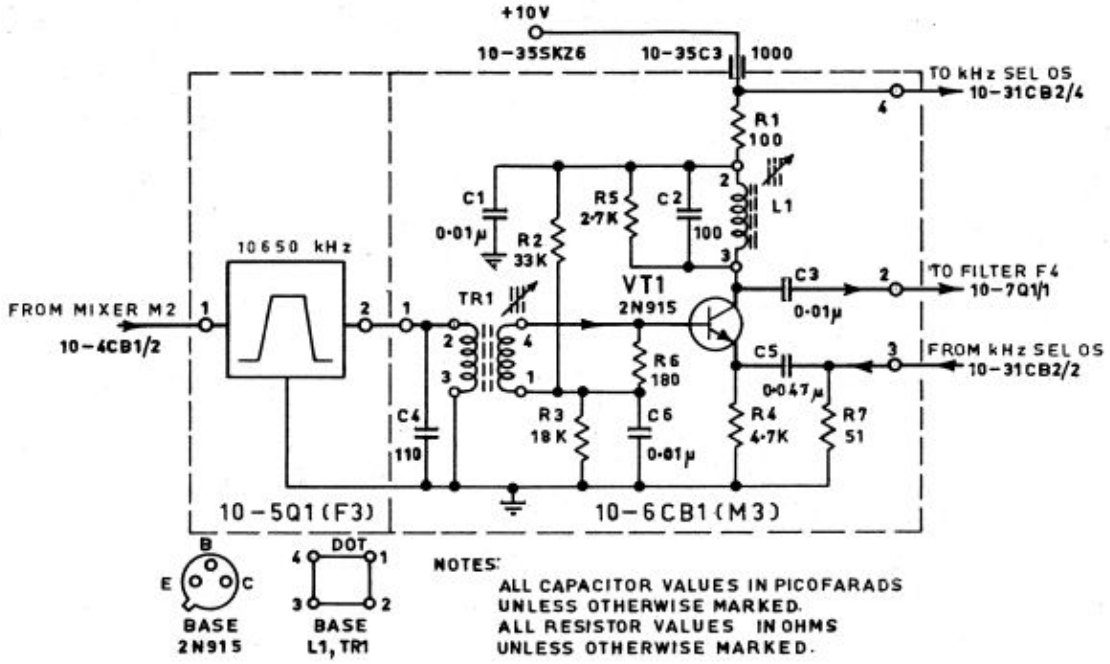

FIG 15 - CRYSTAL FILTER F3 AND MIXER M3

Third Mixer 10-6CB1 (M3)

86. The high level signal input to this mixer is about 140 mV from the kilohertz selection oscillator (module 10-31CB2) and the frequency is between 200 kHz and 209 kHz. The low level signal input is from filter module 10-5Q1. Its frequency is 10,650 kHz. This signal is fed in via transformer TR1 which presents an impedance equivalent to 1k ohm in parallel with 28 pF to the 10,650 kHz crystal filter in module 10-5Q1. The output circuit, consisting of L1,R5, C2 and C3 in the collector of transistor VT1, presents an impedance equivalent to a resistor of 2.7k ohms in parallel with a capacitor of 18 pF to the crystal filter module 10-7Q1, which rejects all but the difference component, i.e., has a nominal pass band of 10,441 to 10,450 kHz.

Crystal Filter 10,445 kHz 10-7Q1 (F4)

87. The crystal filter has a nominal pass band of 10,445 kHz ±12 kHz. The 60 dB attenuation points are at ±45 kHz and this attenuation is maintained throughout the rejection band. The attenuation is greater than 70 dB in the rejection band 10,650 kHz ±10 kHz. The ripple over the pass band is less than 1 dB and the insertion loss 1.4 to 2.4 dB. The impedance at input and output is 2.7k ohm (±10%) in parallel with 18 pF (±5%).

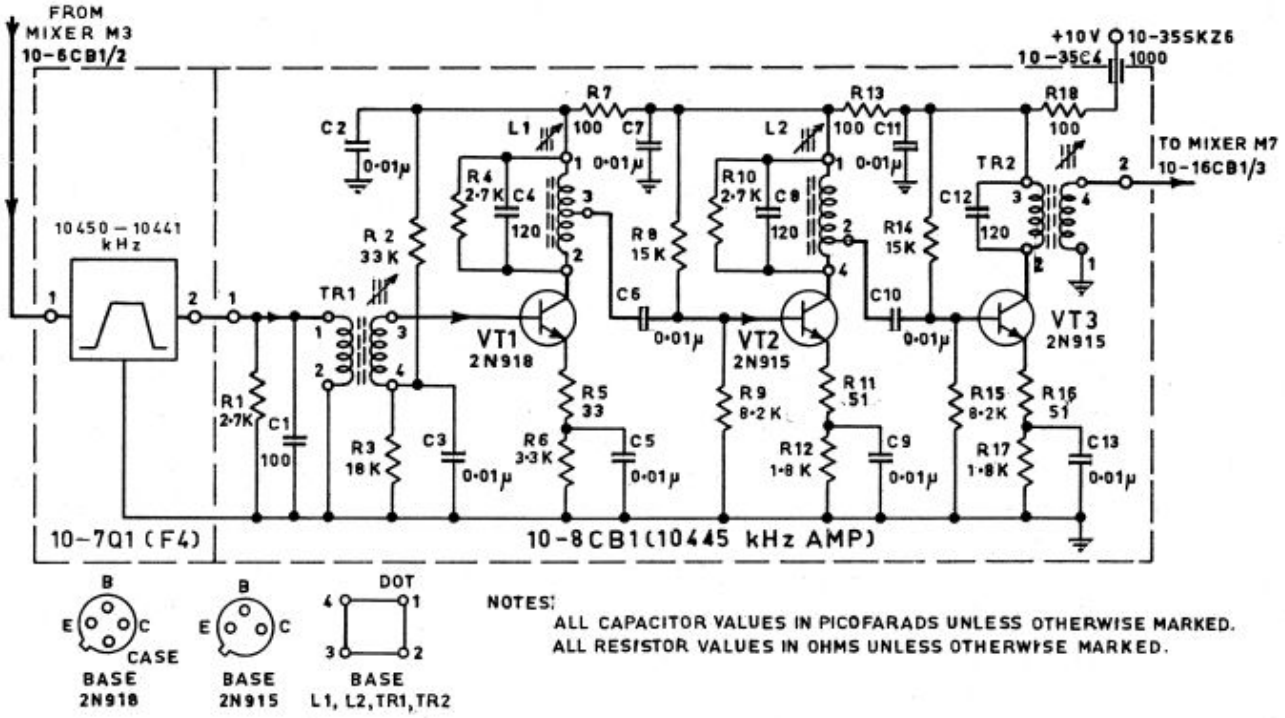

FIG 16 - CRYSTAL FILTER F4 AND 10445 kHz AMPLIFIER

10,445 kHz Amplifier 10-8CB1

88. This is a three-stage tuned amplifier. The transformer TR1 and capacitor C1 provide an effective input capacitance of 18 pF in parallel with the 2.7k ohm resistor R1 at the operating frequency, and they form the termination for the crystal filter module 10-7Q1. The amplifier has tuned collector loads. Inductors L1 and L2 and transformer TR2 are adjusted to peak at the operating frequency 10,445 kHz. The amplified signal is taken from the transformer TR2 at the output of the module to the high level input of the mixer (M7) on module 10-16CB1. The input level to the amplifier is about 7 mV. Accurate measurement is difficult, as any probe connected at the crystal filter output changes the terminating impedance and thus alters the signal level from the filter. The output from the amplifier is about 140 mV.

Ten Kilohertz Selection Oscillator 10-32CB1 (Os 5)

89. This is a grounded base oscillator. Its frequency is controlled by one of the ten crystals (X1 to X10) which is selected by the 10 kHz selection switch. The feedback path of the oscillator is via the capacitive divider C2 and C3. The crystal with associated capacitance C4, C2 and C3 acts as a parallel tuned circuit in the collector of the transistor VT1. The values of the capacitors C4, C2 and C3 are so chosen that with normal stray capacities and coupling capacitors 33C4 and 34C4 the crystal is presented with the equivalent of 30 pF and standard 30 pF parallel resonant crystals are used. The output from the oscillator is taken directly to the two isolating stages on modules 10-33CB1 and 10-34CB1. The frequency error must never exceed ±650 Hz. In practice the error should be less than ±500 Hz. The small coupling capacitors 33C4 and 34C4 and the grounded base isolating stages contribute to the tuning of the oscillator output circuit. The output cannot be measured, or the frequency checked at the output of this oscillator, as the connection of any probe at the collector of VT1 would de-tune the circuit. Therefore, any measurements of the output must be made at the output from either of the isolating stages on modules 10-33CB1 or 10-34CB1, while both isolating stages are connected to the oscillator.

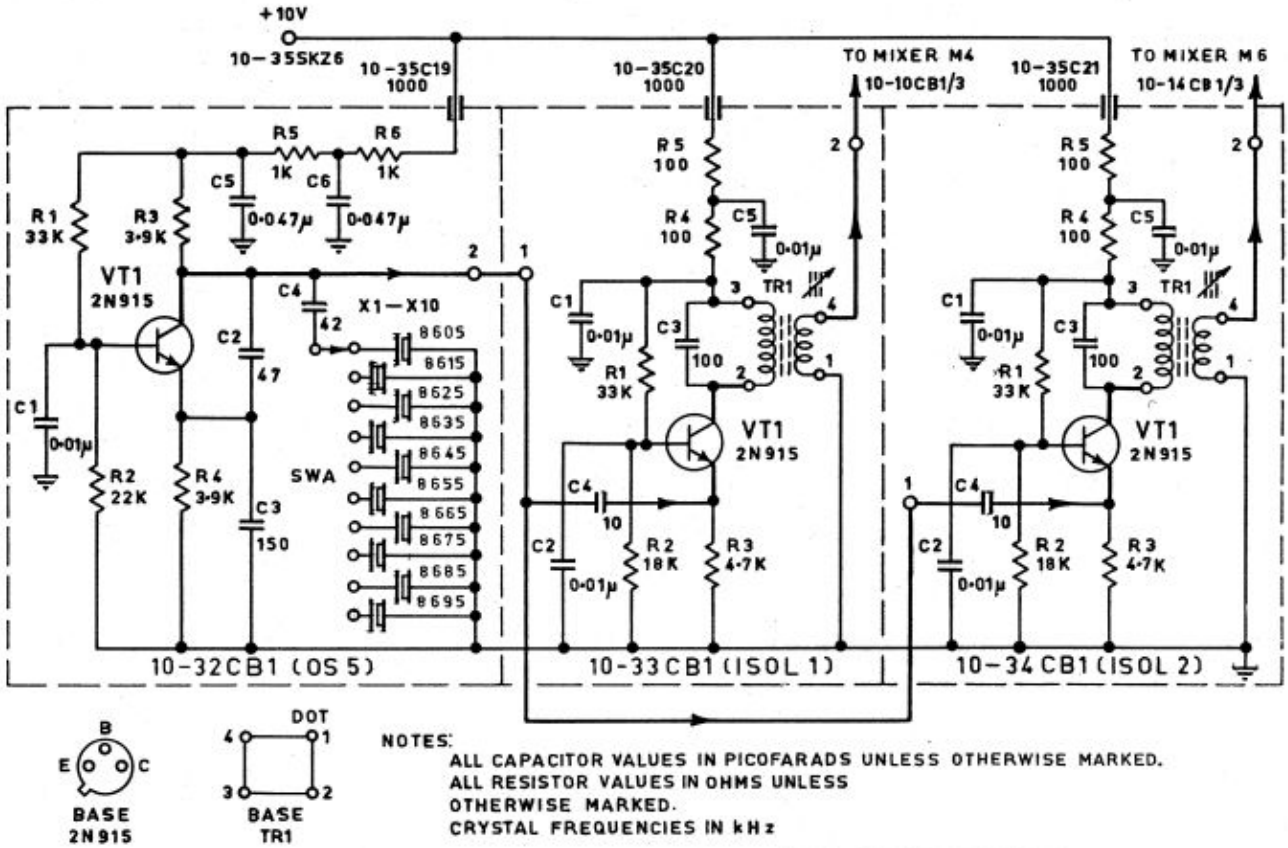

FIG 17 - 10 kHz SELECTION OSCILLATOR AND OUTPUT ISOLATION STAGES

First Isolating Stage 10-33CB1

90. This isolating stage uses transistor VT1 in grounded base connection to achieve isolation between input and output. It is coupled via C4 to the oscillator on module 10-32CB1, this capacitor being part of the tuning of the oscillator crystal. The tuned transformer in the collector of VT1 is peaked at the mid-range frequency, i.e., 8,655 kHz and supplies from its secondary an output of about 140 mV to the high level input of the mixer on module 10-10CB1.

Second Isolating Stage 10-34CB1

91. This stage is identical with that described above (para 90), except that its output is connected to mixer M6 on module 10-14CB1.

10 kHz Input Filter 10-9Q1 (F5)

92. A spectrum of 10 kHz components between 2,010 and 2,100 kHz, is selected from the 10 kHz pulse train supplied by the 10 kHz pulse generator, by the band-pass filter 10-9Q1. The 3 dB points of this filter are at approximately 1,940 and 2,170 kHz. The 40 dB points are below 1,390 and above 2,750 kHz. The filter has an input impedance of 50 ohms and an output impedance of 270 ohms. The insertion loss at 2,055 kHz is less than 2 dB.

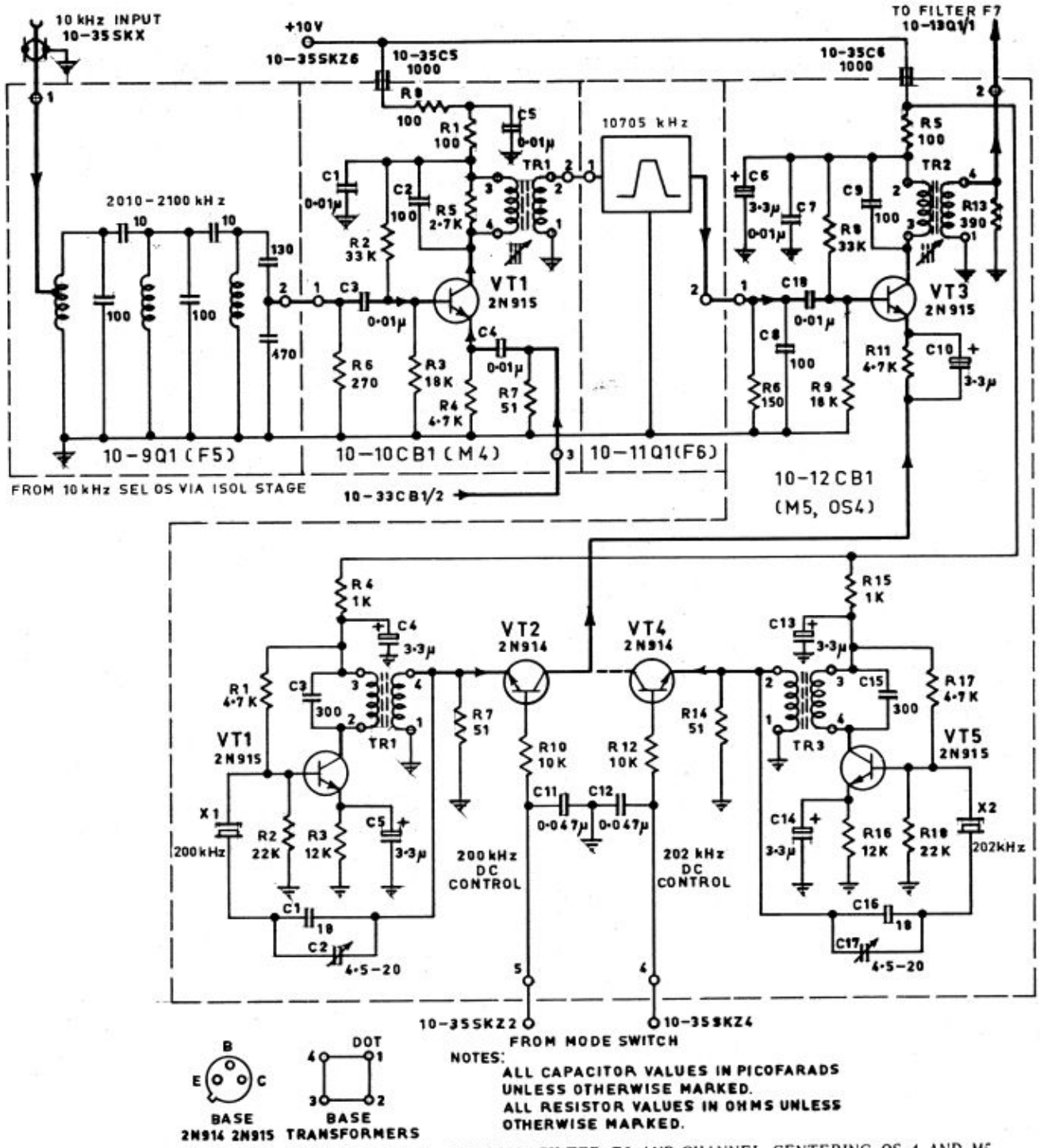

FIG 18 - 10 kHz INPUT FILTER F5, MIXER M4, CRYSTAL FILTER F6 AND CHANNEL CENTERING OS 4 AND M5

Fourth Mixer 10-10CB1 (M4)

93. The 10 kHz spectrum from filter module 10-9Q1 is the low level input to this mixer. The high level injection is from the 10 kHz selection oscillator via the isolating stage 10-33CB1, the level being about 140 mV. The output circuit formed in the collector of transistor VT1 by C2, R5, and TR1 presents the correct matching impedance to the crystal filter on module 10-11Q1, i.e., equivalent to a resistor of 150 ohms in parallel with a capacitor of 120 pF. The crystal filter selects the 10,705 kHz component from the mixing products.

Crystal Filter 10,705 kHz 10-11Q1 (F6)

94. This crystal filter has a nominal bandwidth of ±0.65 kHz centered on 10,705 kHz. The ripple in the passband (10,705.65-10704.35 kHz) is less than 1 dB. The 60 dB points lie ±4.53 kHz from the centre frequency. The pass-band insertion loss lies between 4 and 5 dB. The filter operates from, and into, an impedance presented by a 150 ohm resistor in parallel with a 120 pF capacitor.

Channel Centering Module 10-12CB1 (Os 4 and M5)

95. This module contains a mixer, two injection oscillators, and two electronic switches. One oscillator produces 200 kHz and the other 202 kHz. Transistor VT1 has its emitter grounded, and feedback applied to its base from the secondary of the transformer TR1 through the crystal X1 and its matching capacitance C1 and C2. The tuned transformer in the collector of the transistor ensures that the crystal is excited in the fundamental mode. The crystal has about 30 pF connected in series with it, and therefore operates near its parallel resonance, i.e., it is a standard 30 pF crystal, even though it performs the function of a series resonant path in the circuit. The transformer TR1 resonates with C3 at slightly above 200 kHz. The second oscillator incorporating VT5 and X2 is identical with that described above. Outputs from the two oscillators are applied to the electronic switch formed by VT2 and VT4. Depending on the base conditions at these transistors, one or the other oscillator output is passed on to the mixer transistor VT3. The low-level input circuit to the mixer includes the terminating network for the crystal filter in module 10-11Q1, R6, C8 and the transistor base capacitance, equivalent to a resistor of 150 ohm in parallel with a 120 pF capacitor. The output circuit formed in the collector of transistor VT3 by C9, R13 and TR2 presents the correct matching impedance to the crystal filter in module 10-13Q1, this being a resistor of 390 ohms in parallel with a 40 pF capacitor. The crystal filter selects the 10,905 kHz or 10,907 kHz component from the mixing process.

Crystal Filter 10,906 kHz 10-13Q1 (F7)

96. This crystal filter has a nominal bandwidth of ±1.65 kHz, centered on 10,906 kHz. The ripple in the pass-band (10,904.35 kH. to 10,907.65 kHz) is less than 1 dB. The 60 dB points lie ±6 kHz from the pass band. The insertion loss in the pass band is between 3 dB and 4 dB. The filter operates from, and into, an impedance presented by a 390 ohm resistor in parallel with a 40 pF capacitor.

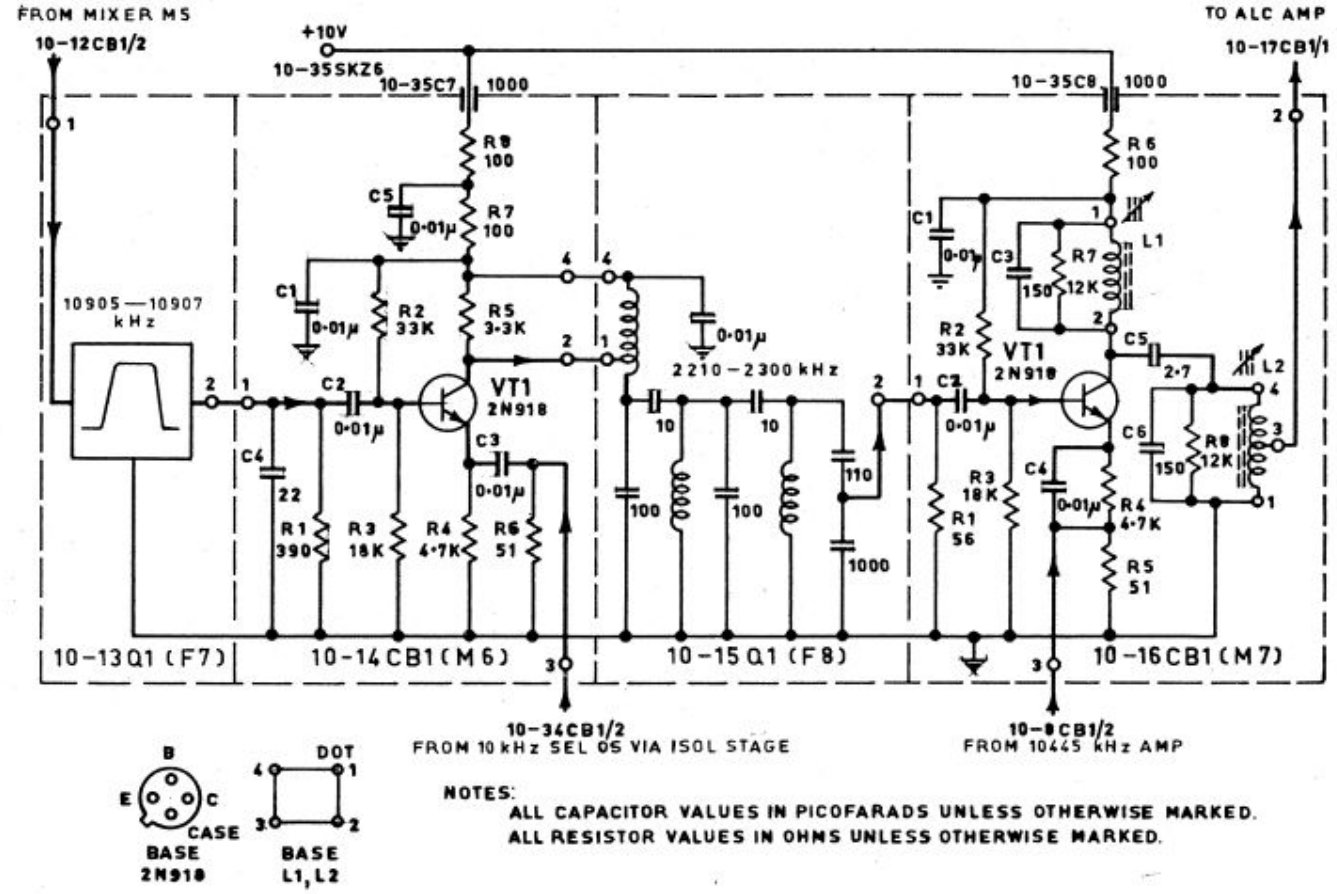

FIG 19 - CRYSTAL FILTER F7, MIXER M6, BP FILTER F8 AND MIXER M7

Sixth Mixer 10-14CB1 (M6)

97. The high level signal input to this mixer is about 140 mV from the 10 kHz selection oscillator (8,605 to 8,695 kHz) via the isolating stage on module 10-34CB1. The low level signal input is from filter module 10-13Q1. Its frequency is 10,905 or 10,907 kHz ±650 Hz. This signal is fed to the mixer transistor VT1 via the input network C4, R1 and the coupling capacitor C2. This network combined with the input capacitance of VT1 forms the termination for the filter module 10-13Q1. This termination is equivalent to a resistor of 390 ohms in parallel with a 40 pF capacitor. The collector load R5 of VT1 is the input termination to the filter module 10-15Q1. It should be noted that a dc path exists between the transistor collector and the filter in module 10-15Q1.

Band-Pass Filter 10-15Q1 (F8)

98. This filter must pass frequencies in the region between 2,210 kHz and 2,300 kHz. The practical filter has its upper 3 dB point at approximately 2,370 kHz and its lower one at approximately 2,140 kHz. Its 40 dB points are at 2,930 kHz and 1,580 kHz. Its insertion loss is less than 5 dB. The input impedance of this filter is 3.3k ohm, its output impedance is 56 ohms. Its input stage forms part of the mixer load on module 10-14CB1 and is dc connected to the collector supply line.

Seventh Mixer 10-16CB1 (M7)

99. The high level signal input to this mixer is about 140 mV from the 10,445 kHz amplifier on module 10-8CB1. This is fed to the emitter of transistor VT1. The low level signal is applied to the base via a network which forms the termination for the band-pass filter on module 10-15Q1. In the collector of VT1 is a tuned circuit comprising inductor L1, capacitor C3 and resistor R7. This tuned circuit is critically coupled by capacitor C5 to a second tuned circuit comprising inductor L2, capacitor C6 and resistor R8. These two tuned circuits are peak aligned to the centre of the sum frequency band of the two input signals, i.e., 12,700 kHz. The output is taken from a tap on inductor L2. This output is then fed to the tuned ALC amplifier stage on module 10-17CB1.

Tuned ALC Amplifier 10-17CB1

100. This stage consists of a common emitter amplifier (transistor VT1) with a variable emitter impedance. This variable impedance is provided by transistor VT2, shunted by resistor R6, and is controlled by a dc signal applied to the transistor's base from a detector diode MR1 (Fig 21), in the output amplifier on module 10-22CB1 via the low pass filter module 10-24Q1 (Fig 21). The resistor R6 limits the maximum resistance in the emitter of VT1. Resistors R3 and R4 supply a bias which keeps the collector to emitter impedance of transistor VT2 at a low value. When the synthesiser output rises, a negative going dc voltage is applied to the base of VT2 from the detector. Fed through the low-pass filter, this voltage causes the base current of VT2 to fall slightly, and increases the collector-emitter impedance. This is equivalent to increasing the effective resistance between the emitter of VT1 and ground, and with it the negative feedback of VT1. This in turn reduces the gain of the stage. The diode in the detector and the base-emitter junction in VT2 are back to back, and this compensates for any small error in ALC threshold due to temperature. Any such error in ALC delay due to knee voltage might become noticeable if not cancelled out, since the signal level at the detector is comparable with the diode threshold, and the detector has to be held slightly forward biased. As a result the output from the synthesiser exhibits very little variation with temperature. In the collector of the amplifier transistor VT1 there is a tuned circuit comprising inductor L1, capacitor C3 and resistor R8. This tuned circuit is critically coupled via capacitor C5 to a second tuned circuit comprising inductor L2 and capacitors C6, C7 and resistor R9. Both circuits are peak aligned to the centre of the operating frequency band, i.e. 12,700 kHz. The output is taken from the junction of capacitors C6 and C7. This output is fed to the mixer M8, module 10-18CB1. The two sets of critically coupled tuned circuits - one on module 10-16CB1 and one on 10-17CB1 - form a band-pass filter. This performs the function of F9 in the simplified block diagram. This filter is centred on 12,700 kHz. Its 3 dB points are 112 kHz on either side of this centre, and 500 kHz either side of the centre the rejection is approximately 40 dB.

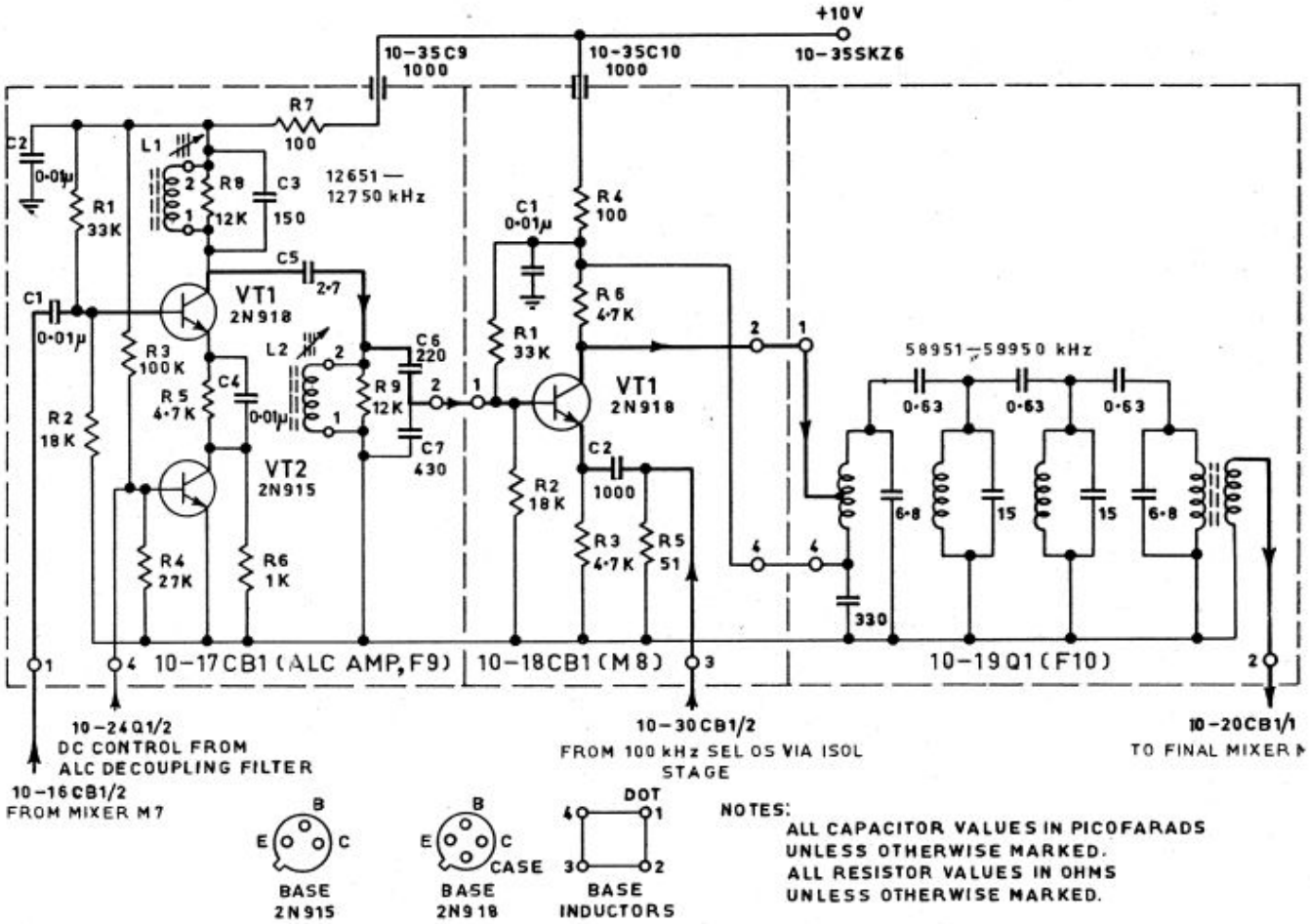

FIG 20 - ALC AMPLIFIER, MIXER M8 AND BP FILTER F10

Eighth Mixer 10-18CB1 (M8)

101. The high level signal input to this mixer is about 140 mV from the 100 kilohertz selection oscillator's isolation stage on module 10-30CB1. Its frequency lies between 46,300 and 47,200 kHz. This signal is fed to the emitter of VT1. The low level signal input is from the ALC amplifier module 10-17CB1, the frequency being 12,700 kHz ±50 kHz. The collector load R6 of VT1 in parallel with the collector output impedance of VT1 is the input termination to the filter module 10-19Q1. There is a dc connection between the collector of VT1 and the filter components. The filter selects the sum component of the two input frequencies which lies in the band 58,951 to 59,950 kHz.

Band-Pass Filter 10-19Q1 (F10)

102. The filter must pass frequencies in the region between 58,951 and 59,950 kHz. The practical filter has its upper 3 dB point at approximately 61,000 kHz and its lower one at approximately 58,000 kHz. Its insertion loss is less than 2 dB. The input impedance of this filter is 4,000 ohms, and the output impedance 220 ohms. Its input stage forms part of the mixer load on module 10-18CB1, and is dc connected to the collector supply line.

Final Mixer 10-20CB1 (M9)

103. The high level signal input to this mixer is about 180 mV from the megahertz selection oscillator via the isolation stage on module 10-27CB1. The frequency of this signal is in the range between 62,450 and 71,450 kHz. The low level signal input is from filter module 10-19Q1. Its frequency is between 58,951 and 59,950 kHz. The input circuit forms part of the matching of the filter. The output is direct from the collector of the transistor VT1. The collector load is formed by the low-pass filter in the next module 10-21Q1. The dc supply for the transistor is via that filter. The filter suppresses all but the difference component of the mixing products which is in the region 2,500 to 12,500 kHz.

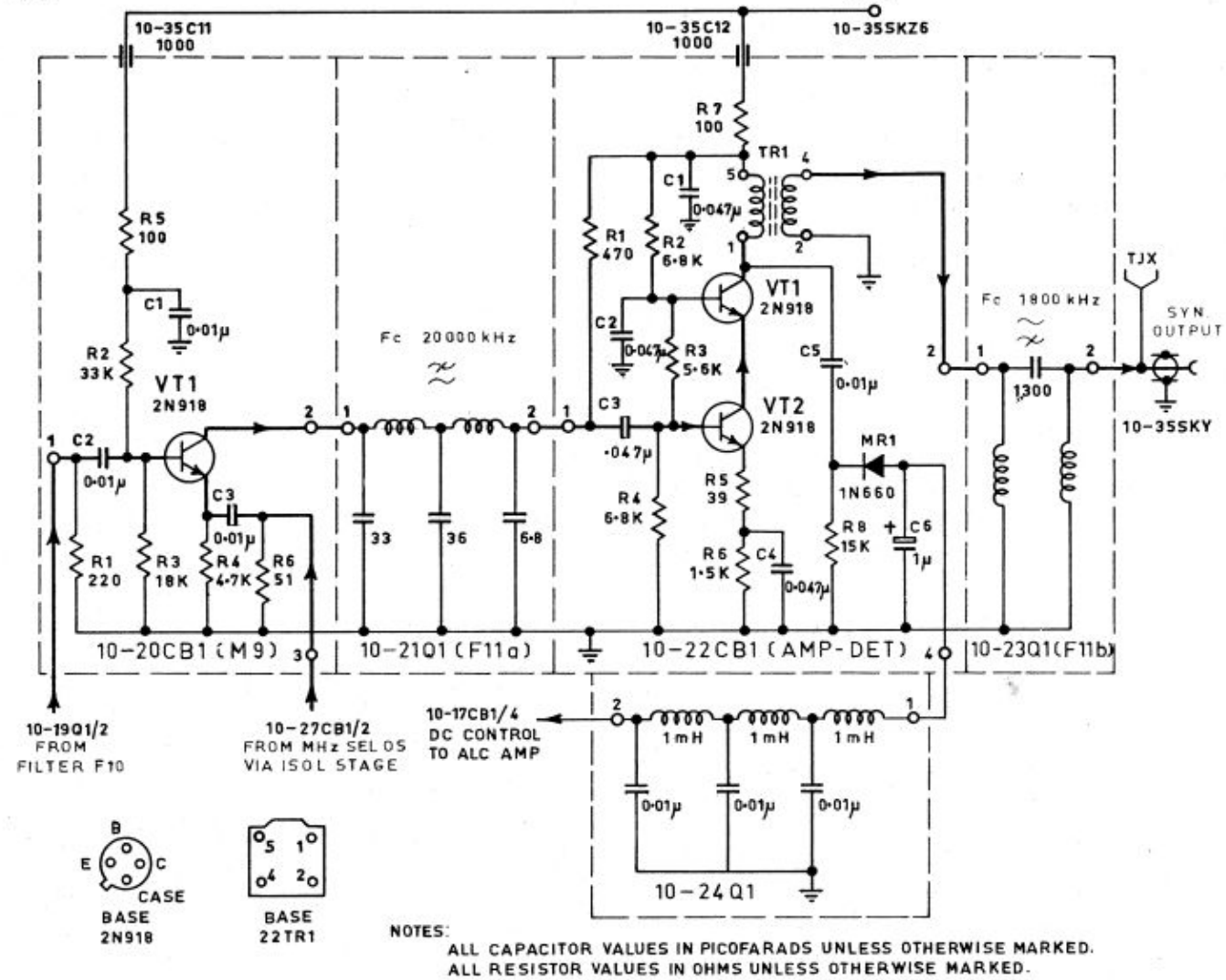

FIG 21 - MIXER M9, LP FILTER F11a, AMP/DET, HP FILTER F11b AND ALC FILTER

Final Low-Pass Filter 10-21Q1 (F11a)

104. The filter must pass the difference frequency components in the output of the final mixer (module 10-20CB1), and reject all other components. The difference frequency is in the region 2,500 to 12,500 kHz. The practical filter consists of two stages with a cut-off at about 20,000 kHz; the attenuation at 20,000 kHz is some 7 dB relative to that at 14,000 kHz and approximately 41 dB at 40,000 kHz. This is a filter of the current-fed type; it provides a dc path for the collector of the transistor in the preceding mixer. The filter output termination is 400 ohms, and is provided by the following module.

Amplifier/Detector 10-22CB1

105. This is a cascode amplifier consisting of transistors VT1 and VT2. The cascode connection is used to reduce the effect of Miller feedback capacity. The unbypassed emitter resistor R5 reduces the effective input capacitance and helps to keep the amplifier gain constant. This is necessary to prevent capacitive loading on the output of the low-pass filter (module 10-21Q1). In addition to terminating the filter correctly, the amplifier raises the signal level from about 30 mV to about 135 mV which is required by the receiver mixer. At the amplifier output is the detector circuit (diode MR1, R8, C5 and C6), which provides the automatic level control voltage.

Final High-Pass Filter 10-23Q1 (F11b)

106. This filter removes any low frequency noise from the synthesiser output. In particular, components around 500 kHz must be eliminated from the output as this is the IF region of the receiver. The filter works into a termination of 51 ohms. Its cut-off frequency is 1,800 kHz and the attenuation at 500 kHz is more than 35 dB.

ALC Decoupling Filter 10-24Q1

107. The cut-off frequency of this filter is not critical, since its only purpose is to prevent any of the signal at the synthesiser output from being fed into the tuned ALC amplifier on module 10-17CB1. The attenuation at 100 kHz and above is at least 40 dB.

COMPRESSION AMPLIFIER AND RELAY DRIVE BOARD *(Fig 22, 23)*

General

108. The board contains the Compression Amplifier and Relay Drive circuit. The compression amplifier processes audio signals of widely varying amplitude and delivers an output of constant amplitude. The relay drive circuit latches the receive-transmit relays in the required state and, in addition, provides the break-in facility for CW operation.

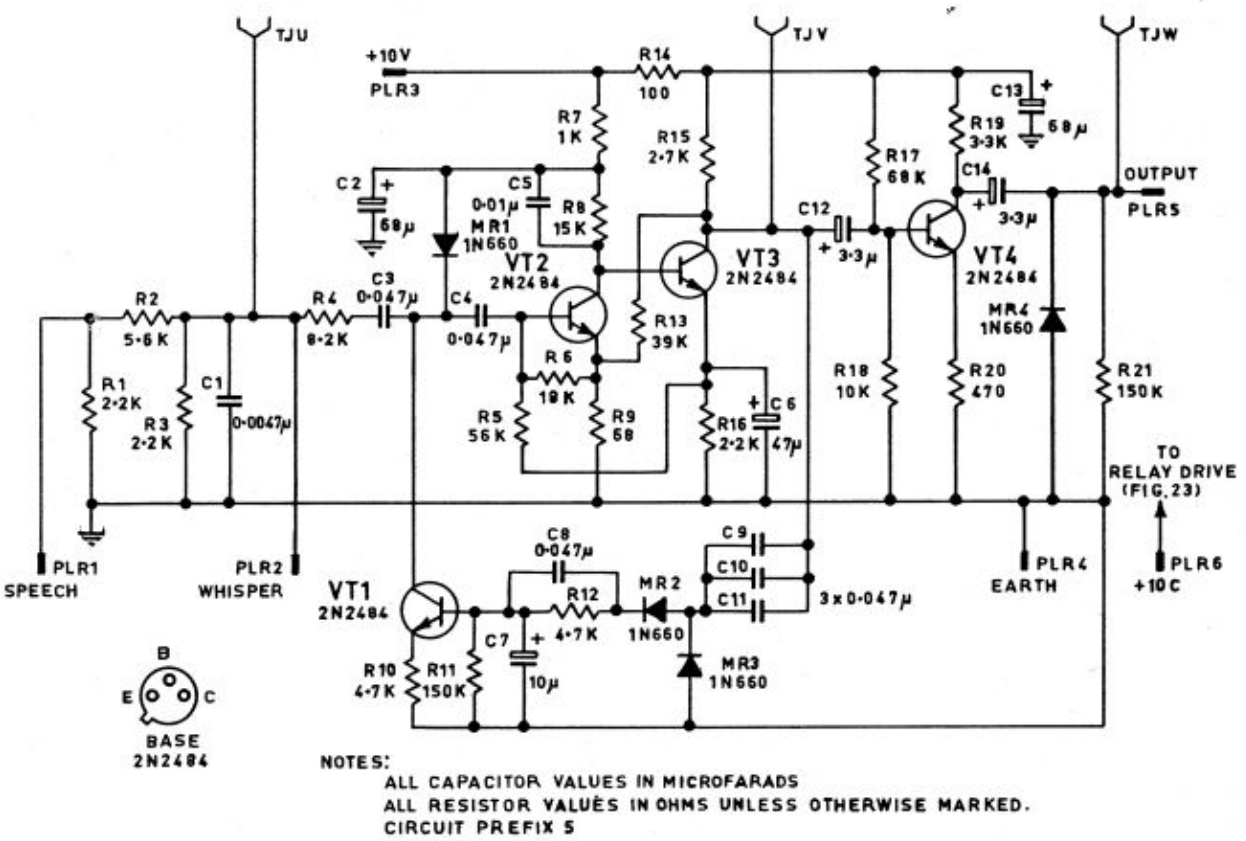

FIG 22 - COMPRESSION AMPLIFIER

Compression Amplifier

109. The amplifier is provided with two separate inputs, one for speech and the other for whisper. The speech input, applied at PLR1, is fed to the amplifier via an 11 dB attenuator pad comprising R1, R2 and R3. This arrangement gives a sensitivity of approximately 4 mV for an output level of 600 mV, and is intended to accept a range of input level from 4 to 80 mV. The whisper input, applied at PLR2, is fed directly to the amplifier. In this case the acceptable range of input level is 1 to 20 mV and the sensitivity is approximately 1 mV for an output level of 600 mV. Capacitor C1 bypasses stray RF currents that may be coupled into the microphone wiring.

110. The compression amplifier circuitry consists of a gain controlled amplifier, followed by a constant-gain stage and a peak-clipping arrangement.

111. The gain-controlled amplifier comprises a voltage-controlled attenuator (R4, MR1, VT1), a two-stage amplifier (VT2,VT3) and compression control detector (MR2, MR3).

112. The voltage-controlled attenuator operates as follows. When the output peaks at the collector of VT3 exceed a threshold determined by MR2 and MR3, C7 charges rapidly through R12 and VT1 conducts. The resultant current flow in MR1 lowers its impedance, thus attenuating input signals. The attack time of the compression control is determined by the values of R12 and C7; the recovery time by R11 and C7. To ensure that R11 alone controls the recovery time, minimum loading on the compression control detector circuit is effected by using a high-gain transistor for VT1. Capacitor C8 speeds up the attack time of the circuit.

113. The controlled attenuator is followed by a two-stage feedback amplifier. Bias stability is obtained by feedback from VT3 emitter to VT2 base. In order to provide a high input impedance, R6, which forms part of the bias network, is returned to VT2 emitter. The gain of the amplifier is determined by a second feedback loop and is approximately equal to the ratio R13 to R9. This feedback, from VT3 collector to VT2 emitter, decreases the output impedance and increases the input impedance. The time constant controlling the frequency response and hence loop stability is determined by C5.

114. The gain-controlled amplifier output is further amplified by a constant gain stage (VT4). The signal at the collector of VT4 has its peaks clipped to one quarter (−12 dB) of their original amplitude in order to increase the average power. The clipping is accomplished by a full wave clipper comprising MR4 and the base-emitter junction of transistor VT10 in the carrier gate trigger on the sidetone and audio board (para 201).

115. Transistors VT3 and VT4 are supplied from the common decoupling network R14, C13; VT2 is decoupled separately (R7, C2). Resistor R21 provides a discharge path across the clipper diode to ground. This prevents the output from floating at some potential between the clipping levels (±0.6V) thereby unbalancing the balanced modulator which is connected to the amplifier.

Relay Drive Circuit

116. The RT unit is switched between the receive and transmit conditions by four twin-coil magnetic latch relays, each having two sets of change-over contacts. One end of each coil is permanently connected to the 28 volts supply. The relay drive circuit grounds the other ends of the paralleled transmit or receive coils for a period of 20 msec which is sufficient to latch the relays in the required state. The circuit also provides a break-in delay of approximately 0.5 sec for morse keying.

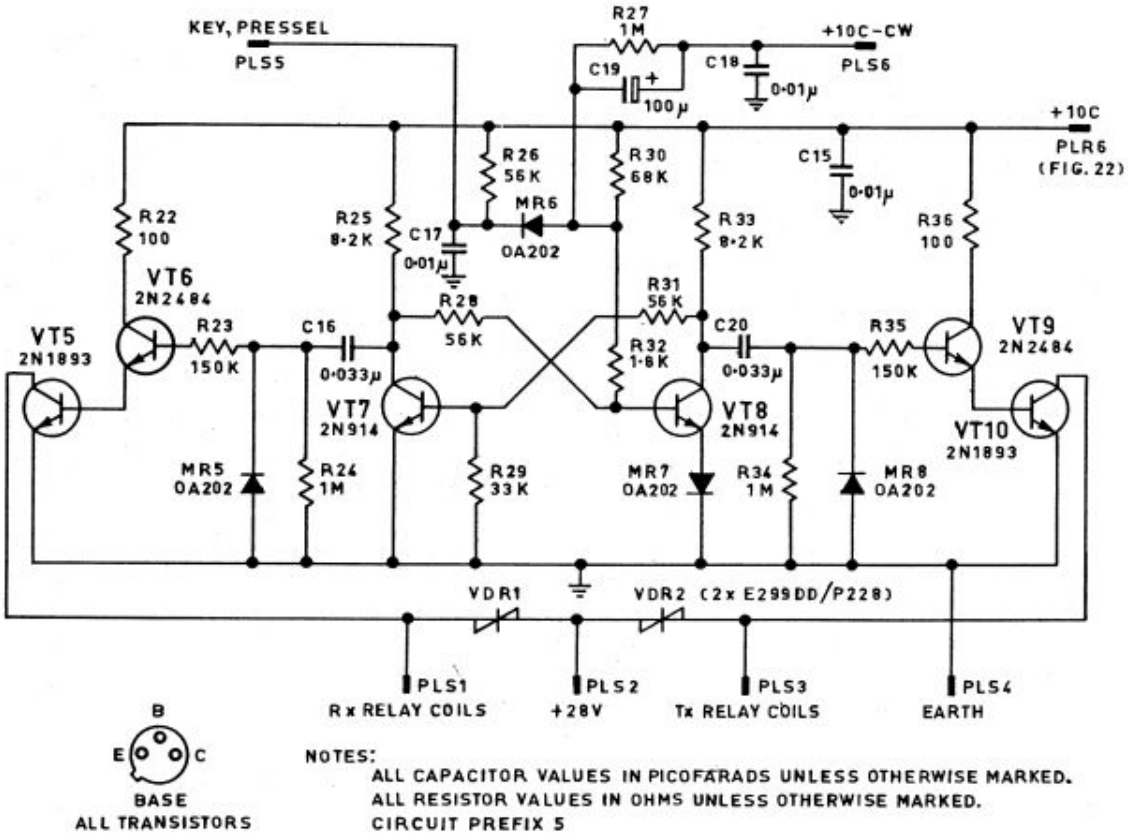

FIG 23 - RELAY DRIVE CIRCUIT

117. Before the pressel or key contact is closed, the RT set is in the receive condition. Transistor VT8 is switched on, VT9 and VT10 are off.

118. When the pressel or key contact is closed, PLS5 is earthed. This forward-biases diode MR6 and, due to the voltage drop across this diode, the base of VT8 has a potential of approximately 0.6V to ground. This cuts off VT8, as a forward bias of at least 1.2V is needed to maintain conduction owing to the presence of MR7 in series with the emitter. The collector voltage of VT8 rises to 9.9V and forward bias is applied to VT7 via R31 and R29. Thus, VT7 is switched on in the transmit condition.

119. The change in VT8 collector voltage is differentiated by C20/R34, and a pulse is applied to VT9 base through current-limiting resistor R35. Transistors VT9 and VT10 are switched on until such time as C20 has discharged sufficiently to switch them off again. During the on period of 20 msec, the transmit coils are earthed, latching the relays in the transmit state.

120. Circuit operation when the pressel or key is released depends upon the mode of operation.

121. On SSB and AM, release of the pressel or key causes the base potential of VT8 to rise instantly and VT8 is switched on. By regenerative action VT7 is switched off, the change in VT7 collector voltage is differentiated by C16/R24, and a pulse is applied to VT6 base through current limiting resistor R23. Transistors VT6 and VT5 are switched on until such time as C16 has discharged sufficiently to switch them off again. During the on period of 20 msec, the receive coils are earthed, latching the relays in the receive state.

122. Normally, the RT unit's relays are in the receive condition until the pressel or key is operated and causes the relays to be pulsed into the transmit condition. On any of the CW modes of transmission, when the key contact is closed the transmit coils are earthed for approximately 20 msec as described in para 119. Also, 10 volts is applied to C19 via PLS6. On releasing the key, C19 begins to discharge through R27 and R30 until the base of VT8 has sufficient potential to turn this transistor on. This allows the relays to be pulsed back into receive. The purpose of the 0.5 sec delay circuit (C19 and R27, R30) is to provide a continuation of transmission between separate letters of the transmission, but between words, where the break is longer than 0.5 sec, the RT unit is in the receive condition to permit other messages to be monitored especially during long transmissions. This operation is referred to as the "break in facility".

123. A voltage dependent resistor (VDR) is connected in parallel with each group of relay energising coils to limit the inductive emf, generated by switching, to a value which is not detrimental to VT5 and VT10.

124. Diode MR6 isolates the key/pressel line from the relay drive circuit when the key is released. The voltage on this line is required to change from 0 to 10V from key down to key up in order to control the carrier insert keyer gate on the modulator board. In the absence of MR6 the charge on C19 would not allow the voltage on the line to rise rapidly after release of the key. Diode MR7 prevents the potential drop of 0.6V across MR6 from turning on VT8.

125. Diodes MR5 and MR8 protect the base-emitter junctions of VT5, 6 and VT9, 10 respectively from the negative-going pulses when VT7 and VT8 switch off.

MODULATOR BOARD *(Fig 24)*

General

126. This plug-in module processes the audio signal from the compression amplifier and produces an SSB signal of the required frequency for transmission. The module also produces compatible AM by re-inserting the carrier in the position of the suppressed carrier in the SSB signal. CW signals are produced by keying the re-inserted carrier in the absence of an audio signal.

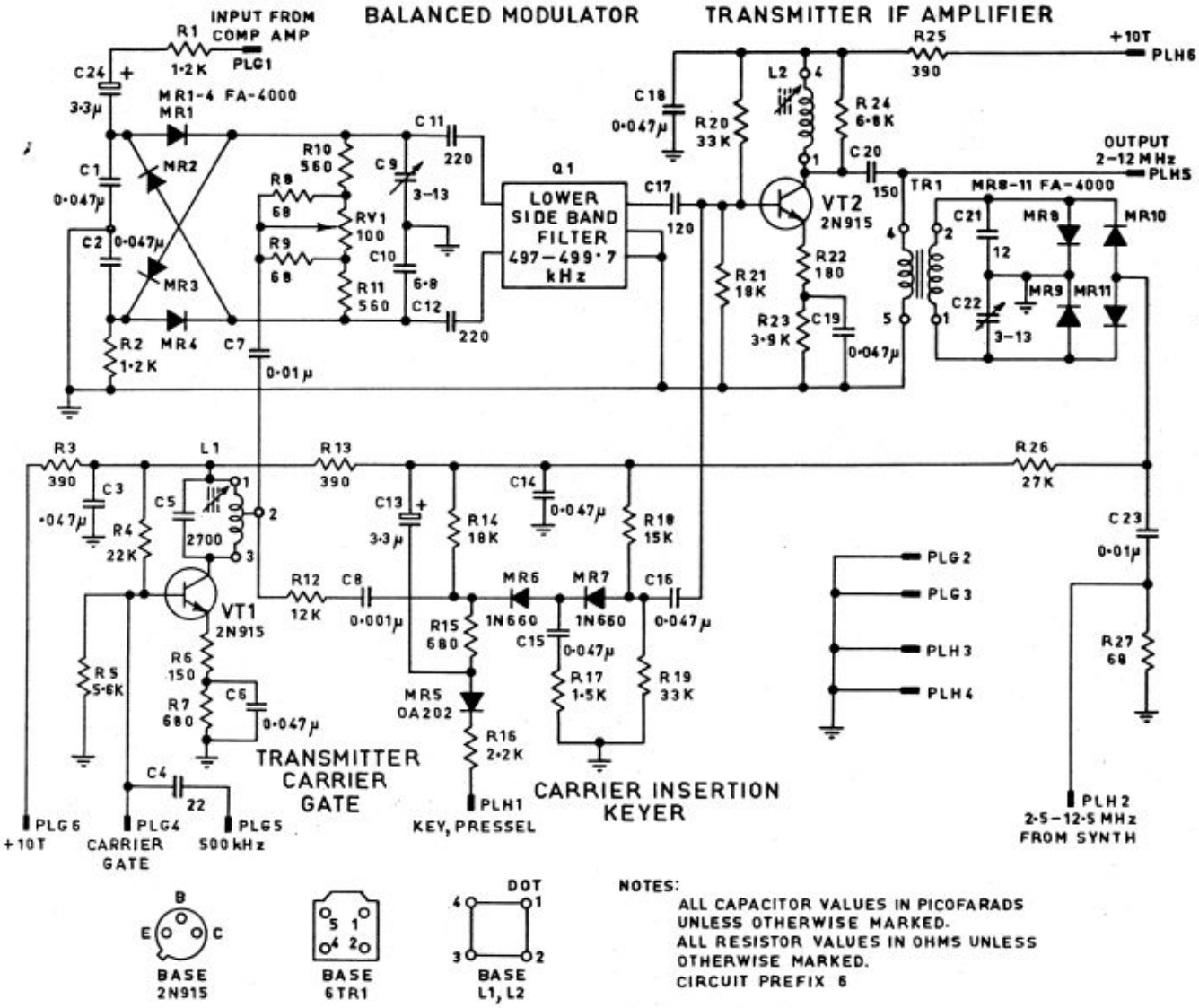

FIG 24 - MODULATOR

Principle of Operation

127. In the SSB mode the audio signal is applied to the balanced modulator, together with a 500 kHz local carrier. The local carrier is applied via the transmitter carrier gate, (VT1), which is controlled by the carrier gate trigger on the sidetone and audio board. This trigger responds to the presence of audio at the output of the compression amplifier; therefore the 500 kHz carrier is only passed to the balanced modulator when audio signals are present. The application of audio and the 500 kHz carrier to the balanced modulator produces upper and lower sidebands at the input to the lower sideband filter, the carrier being suppressed by the balanced modulator.

128. The LSB filter selects the lower sideband, which is amplified in the transmitter IF amplifier and applied to the balanced transmitter mixer. Here, the synthesiser output is mixed with the lower sideband, and the products of the mixing process are fed to the RF amplifier. The synthesiser signal is suppressed by the balanced mixer. Two products are present at the output of the transmitter mixer and these are spaced 500 kHz on either side of the synthesiser frequency. The difference product is subsequently selected by the RF amplifier for transmission.

129. It is important to note that the relationship between carrier and sideband, which is established at the balanced modulator, is subsequently reversed in the transmitter mixer because the difference frequency is selected for transmission. This means that although the sideband filter selects a lower sideband, the reversal results in an upper sideband being transmitted.

130. The operation of the carrier insertion keyer depends on the setting of the Mode switch:

(a) SSB Mode - The pressel is isolated from the carrier insertion keyer by a section of the mode switch so that the carrier insertion keyer is not operative in the SSB mode.

(b) AM mode - In this mode, the action is the same as for SSB except that the pressel is now connected to the carrier insertion keyer, which re-inserts the carrier when the pressel is operated. Re-insertion takes place after the LSB filter and this results in the transmission of the carrier and one sideband, as required for compatible AM.

(c) CW Modes - In all CW modes, the carrier gate trigger holds the transmitter carrier gate open while the RT set is in the transmit condition. Operation of the morse key causes the carrier insertion keyer to re-insert the carrier as in the AM mode. Since there will be no speech signals arriving at the balanced modulator, the re-inserted keyed carrier becomes the output from the module.

Circuit Description

131. The constant-level output from the compression amplifier enters the modulator board at PLG1 and is applied to the conventional balanced ring modulator MR1-4. The 500 kHz carrier enters the module at PLG5 and is fed, via C4, to the transmitter carrier gate, comprising VT1 and associated components. The carrier is amplified by VT1 and the output is taken from a tap on L1 (which forms part of the high-Q tuned circuit L1/C5) to both the balanced ring modulator MR1-4 and to the carrier insertion keyer MR6, 7.

132. The carrier amplifier VT1 also acts as a gate (para 201). The gate is opened and closed by an open circuit or an earth, respectively, at PLG4. This open circuit or earth is provided by the carrier gate trigger.

133. The balanced modulator output is then applied to the 497-499.7 kHz Lower Sideband Mechanical Filter via the balancing network comprising R8-11, RV1 and C9,10. Potentiometer RV1 and variable capacitor C9 are adjusted for minimum carrier output under zero-input conditions. The output of the filter is fed, via C17, to the IF amplifier which consists of VT2 and associated components.

134. The output of the IF amplifier is passed from the series tuned circuit L2/C20 in the collector of VT2 to the shunt type balanced mixer MR8-11. Here the speech modulated and amplified 500 kHz signal is mixed with the input of the synthesiser (applied at PLH2) to produce the desired frequency in the range 2-11.999 MHz. The operation of the shunt type balanced mixer is as follows. The synthesiser voltage causes a periodic variation in impedance of the diodes MR8-11, which are the load on the balanced secondary winding of transformer TR1. The secondary load is reflected back as a periodically varying shunt impedance at the collector of VT2. However VT2 is used to amplify the 500 kHz IF signal and since its collector load is periodically varying, mixing will take place in this stage. Carrier balance is set by the variable capacitor C22, set for minimum synthesiser frequency voltage at PLH5. To overcome the initial threshold bias of diodes MR8-11, forward bias is applied via R26.

135. When the key is pressed in any of the CW modes of transmission, terminal PLH1 is earthed, thereby forward biasing diodes MR6 and MR7 of the carrier insertion keying circuit and causing insertion of the carrier at the base of VT2. C15 and R17 attenuate the carrier before it is passed to the base of VT2. When the key is lifted, PLH1 returns to +10V, MR6 and MR7 become reverse biased and the circuit blocks the passage of the carrier to the IF amplifier. Carrier leakage is negligible because of the two stages of isolation. In the key up position, the key/pressel line is at +10V potential and MR5 isolates the keying circuit from the key/presse line. To suppress unwanted key clicks, it is desirable that the keying envelope has a slow rise and fall characteristic; this is achieved by R15, R16 and C13.

RF AMPLIFIER (Fig 1004)

General

136. The RF amplifier is used both for reception and transmission. It is mechanically coupled to the synthesiser frequency selection switches and is thus automatically channelled to the reception or transmission frequency when the synthesiser frequency is set. The input signal to the RF amplifier is either the received signal which travels to it via the internal coupling circuit or, when transmitting, the output of the modulator which contains the transmission signal frequency along with unwanted frequencies. In either case the amplifier selects the wanted signal. Initial selection is by two critically coupled tuned circuits. The signal is then amplified and further selected by a third tuned circuit. For reception, a mixing stage in the RF amplifier mixes the selected and amplified signal with the synthesiser output frequency to produce the 500 kHz receiver IF signal. For transmission, the selected and amplified signal leaves the RF amplifier, via an emitter follower stage, for further amplification in the power amplifier.

137. For AGC operation during reception and for ALC control of the power amplifier during transmission, externally derived control voltages are applied to the two amplifier stages.

138. The RF amplifier is fed from three separate 10V supply lines, 10C, 10T and 10R (Fig 7). The amplifying stages operate during both receive and transmit. The emitter follower is switched off during receive and the mixer is switched off during transmit.

Tuning System

139. The RT unit is decade tuned in steps of 1 kHz from 2,000 kHz to 11,999 kHz. The synthesiser, which determines the receive and transmit frequencies, and covers a range of 2,500 kHz to 12.499 kHz, is set on frequency by four switches selecting

respectively, thousands, hundreds, tens and units of kilohertz. To achieve the decade tuning of the RF amplifier, the required coverage of 2 to 12 MHz is firstly split into ten 1 MHz bands. Thus the MHz (or thousands of kHz) switch selects one of ten bands each covering 1,000 kHz. Each band is now sub-divided into intervals of 100 kHz and ten kHz, and this is achieved by a tuning capacitor precisely notching around in decade frequency steps. Thus, having set the MHz switch, it is possible to cover the selected MHz range in 10 kHz divisions.

140. The tuning capacitor is common to all bands and the absolute frequency coverage of each band is determined by the inductance-trimmer-padder combination. Such a combination is TR1, C1, C2, C3 (on TUNER 2) and the appropriate tuning capacitor C1/A. Padding of each band is required because of the varying frequency ratios, being 1.5 to 1 on the 2-3 MHz band and approximately 1.09 to 1 on the 11-12 MHz band.

141. In order to achieve a straight-line frequency law for the tuning capacitor, as required by decade tuning, the existing law of the capacitor is mechanically corrected by means of a cam, so that the non-linear frequency rotation of the capacitor is converted to a linear motion, which is then converted to decade steps by the 100 kHz and 10 kHz selection switches. The frequency bands track with one another precisely at three points only, viz., the middle and the two extremities of the bands. Elsewhere a slight tracking error is present, but this has been reduced to a minimum, so that the maximum loss in response due to tracking error is not more than 0.5 dB per circuit. It should be pointed out that the RF amplifier is not tuned by the 1 kHz selection switch. The additional complexity in the cam gearing mechanism would not achieve any worthwhile improvement in tuning accuracy.

142. The ten switched tuned circuits for each of the three selective circuits are shown in the circuit diagram Fig 1004. The three tuned circuits on any one band are similar in all respects; trimmer and padder values as well as transformer details are the same throughout. Selection of the required band is by means of switch SWA and provision is made on this switch to short out all transformer primaries other than those of the band in use. This is done to overcome absorption effects which can result in uneven response over the band in use. Each tuned circuit is temperature compensated by the use of a negative-temperature coefficient capacitor (C2, C4, C6 each 18 pF, with a temperature coefficient of −2200 parts per million) shunted across each section of the ganged tuning capacitor.

143. The tuned amplifier, together with the tuned circuits for the bands 8-9 MHz, 9-10 MHz, 10-11 MHz and 11-12 MHz, is mounted on one circuit board designated TUNER 1. TUNERS 2, 3 and 4 carry the tuned circuits for the remaining six bands. The MIXER-AMPLIFIER board accomodates the mixer and the emitter follower circuitry, and a DECOUPLER board carries the decoupling circuits for the 10V supplies and the AGC and ALC lines, and a voltage delay circuit for the AGC.

Circuit Description

144. The RF amplifier, from its input at PLD-A1 to the input of the mixer-amplifier (pin 34) is common to the receive and transmit functions. The input is designed to be fed from an 80 ohm source and TR1 is a wideband transformer stepping up this impedance to 1300 ohm over the range 2 to 12 MHz with negligible insertion loss.

145. On each 1 MHz band a coupled pair of tuned circuits is inserted between the 1300 ohm impedance point and the base of the first transistor. The circuits are adjusted so that the base of the first transistor is presented with a source impedance of 400 ohms for optimum signal to noise performance (Fig 25), while the circuits are terminated in 1300 ohms (the average input impedance of the first transistor) and the pair of tuned circuits is critically coupled.

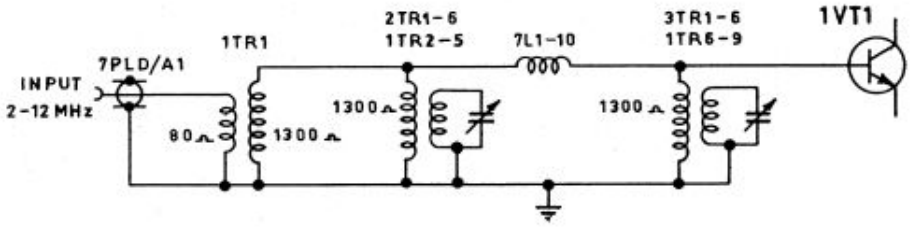

FIG 25 - SIMPLIFIED COUPLING CIRCUIT

146. The tuned circuits are inductively coupled at their 1300 ohm impedance points. The 1300 ohm point on the first transformer is driven from the secondary of the wideband transformer TR1 on TUNER 1, and the 1300 ohm point on the second transformer feeds the base of the first amplifier. The coupling inductors are shown on the circuit diagram (Fig 1004) as L1 to L10. A coupled pair is employed to give as much rejection as possible to unwanted signals outside the band before they reach the first transistor, thus minimising cross modulation.

147. A single tuned circuit is used in the collector of the first amplifier transistor 1VT1. It is coupled to the collector by a small capacitor (3.3 pF) and the amplifier, driven from 400 ohm, is then mismatched at input and output and is therefore stable. Shunt diodes at the input to the first amplifier protect the transistors from damage by radiation from adjacent transmitters.

148. The second amplifier transistor 1VT3, is fed from 1300 ohm on all bands, this being the stepped down impedance of the tuned circuit. The collector is loaded in 180 ohm and the second stage operates as a low-gain wide-band amplifier.

149. Both amplifiers use a type 2N918 in a common emitter configuration and both are gain controlled by a type 2N918 in the emitter circuits, VT2 controlling the gain of VT1 and VT4 controlling the gain of VT3. The control transistors are current-fed. Because there is zero dc bias on the collectors and the signal excursions are small, the dynamic collector resistances of the control transistors can be controlled by controlling their base currents. As the base current is decreased, the collector resistance rises and, being in the emitter circuit of the amplifier, degeneration increases and amplifier gain falls. The current supplied to each control transistor is determined by the AGC voltage applied to the 12 k ohm resistor in the base of each control transistor.

150. During reception, delayed AGC is applied to the control stages as follows. The AGC voltage at PLD1 (from the AGC rectifier in the IF amplifier, Fig 34) varies from +8V to+0.6V according to the received signal level. At the high voltage, corresponding to low signal level, transistor 6VT1 is switched on and the collector voltage falls, thus switching on the pnp transistor 6VT2. A high current then flows from +10R via 6R3, 6R11, 6VT2, 6MR2 and 6R4 into 1VT2 base, thus reducing the impedance of 1VT2 and allowing maximum gain in 1VT1. The control transistor 1VT4 is current fed in parallel with 1VT2 via the external connection between PLE5 and PLD2, which is made by relay RLA during reception (Fig 1002), thus allowing maximum gain in 1VT3.

151. As the signal input to the receiver rises, the AGC voltage at PLD1 falls, but transistor 6VT1 remains switched on until a threshold level, determined by the voltage divider 6R6, 6R7, is reached. At the threshold level 6VT1 is switched off, its collector voltage rises and switches off 6VT2. The current path from +10R is then blocked and the AGC voltage is applied directly via 6MR1 to 1VT2 and 1VT4, thus giving a normal AGC characteristic. Capacitor 6C7 serves to smooth any fluctuations on the incoming AGC.

152. During transmission the gain of the RF amplifier is controlled by a voltage generated in the power amplifier. This control voltage is referred to as the automatic level control voltage (ALC) to distinguish it from the AGC voltage used on receive. The ALC voltage enters the RF amplifier at PLE5 (Fig 1002) and is applied to the control transistor 1VT2 only. The gain of the other control transistor 1VT4 is preset by applying one of two predetermined current levels to its base. These current levels are determined by the selection of high or low power transmission, and are derived from the 28V or 10V PA collector supply via 1-7R1 (47 k) and relay RLA (Fig 1002).

153. During transmit, the emitter follower 5VT1, mounted on the mixer-amplifier circuit board, is switched on and feeds the RF amplifier output to the first stage of the power amplifier via PLE-A1. The emitter follower is designed to handle the level required at the power amplifier input with very low third-order products.

154. During receive the mixer 5VT2 on the mixer-amplifier board is switched on and its output at PLD-A2 feeds the receive IF amplifier.

POWER AMPLIFIER PART A AND B, AUTOMATIC LEVEL CONTROL AND BANDPASS FILTERS *(Fig 26, 27)*

General

155. The power amplifier consists of two parts, designated Part A and Part B. Part A consists of a printed circuit board mounted in a shielded compartment and contains a two-stage RF amplifier and the automatic level control circuits. Part B is in the form of three printed circuit boards and a heat sink, on which are mounted the power output stage and protection circuitry. The 1.4V regulator, which supplies a temperature dependent bias for the output transistors, is mounted above Part A in a shielded compartment. Another shielded compartment mounted on part A contains the five bandpass filters.

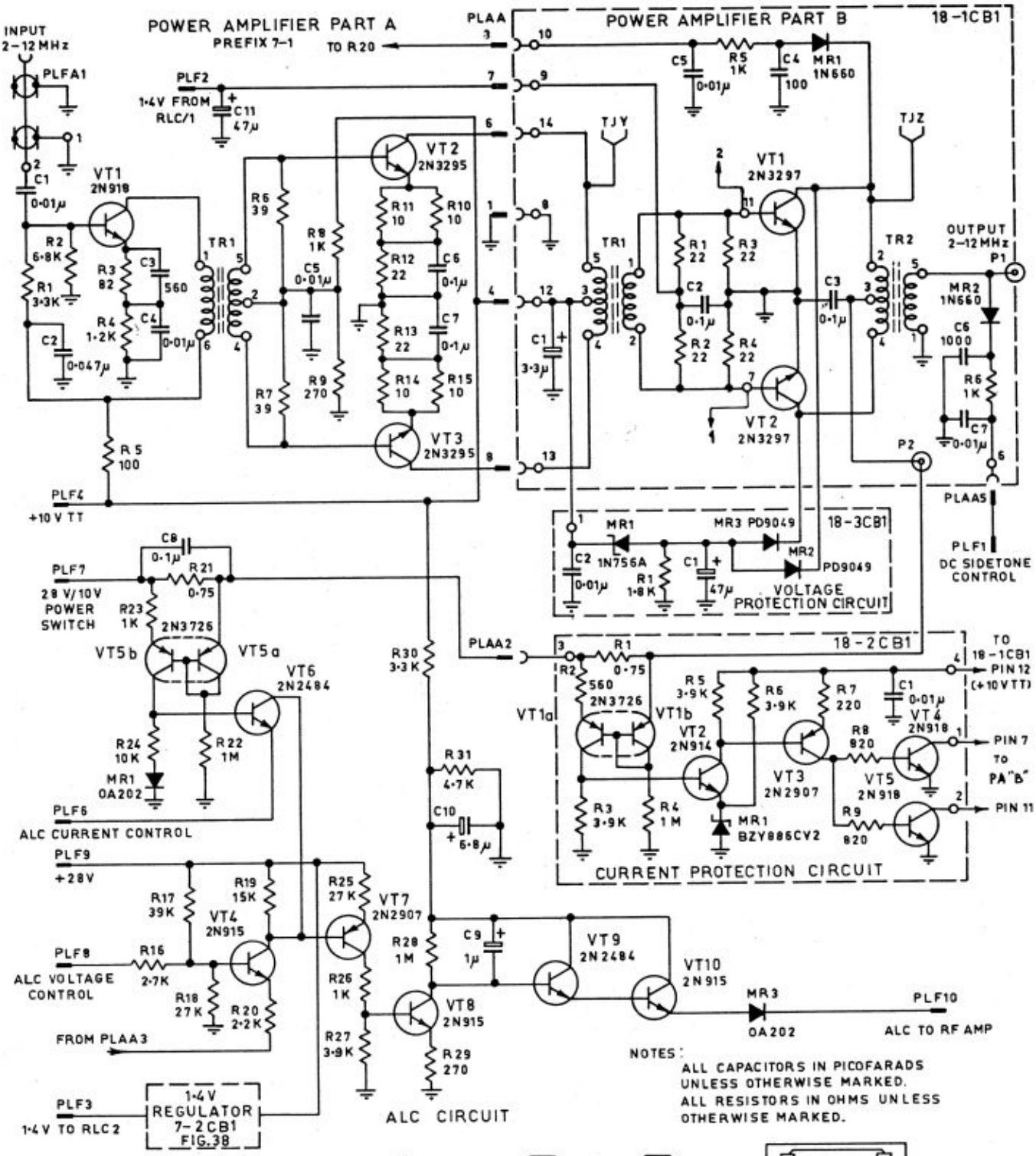

FIG 26 - POWER AMPLIFIER AND ALC

156. The power amplifier raises the level of the signal to be transmitted, from about 40 mV input to 10 watts peak envelope power (pep) output, this level being maintained by the automatic level control (ALC) system. The power amplifier is a broadband circuit with an overall frequency response substantially flat from 2 to 12 MHz. The power amplifier is fed from the RF amplifier and delivers its output via one of the bandpass filters (selected by the kHz x 1000 switch) to the internal coupling circuit of the RT unit and thence to the antenna.

Power Amplifier Part A

157. The input signal from the RF amplifier appears at PLF-A1 and is applied to the base of VT1 (in power amplifier Part A) via capacitor C1. The base bias potential is produced from the 10V supply line by the voltage divider R1, R2. Some negative feedback is applied to VT1 by the resistor R3 in its emitter circuit, C4 providing the signal earth. Capacitor C3 reduces the amount of negative feedback at high frequencies, thus producing a rising response to offset internal high-frequency losses. Resistor R4 provides dc feedback for stabilising purposes.

158. The amplified signal at VT1 collector is transformer coupled to the following stage by 7-1TR1, a broadband ferrite-cored transformer. The balanced secondary of 7-1TR1 produces the anti-phase signals to drive VT2 and VT3, which operate as a push-pull, class A amplifier. Base bias is established by the divider R8, R9, with C5 providing an RF earth at TR1 centre tap. The bias voltage is applied to the transistors via the transformer winding. R6 and R7 minimise the high frequency roll-off due to the input reactance of the transistors. Negative feedback is applied to the stage by the unbypassed emitter resistors R10, R11, R14 and R15, and dc stabilisation is provided by R12, R13, in conjunction with RF bypass capacitors C6 and C7. This stage is transformer coupled to the power amplifier output stage (power amplifier Part B) by broadband transformer 18-1TR1, mounted in the power amplifier Part B assembly.

Power Amplifier Part B

159. The power amplifier output stage operates in class AB push-pull to eliminate the crossover distortion which would result from class B operation. Since the emitters of VT1 and VT2 are earthed, the nominal 1.4V source used to supply the base bias is temperature-corrected to compensate for the 2 mV/°C change in base to emitter turn-on voltage in the transistors. This source is the 1.4V regulator (para 215 to 222). The regulator output has a temperature coefficient of 4 mV/°C, which is reduced by the voltage dividers R1, R3 and R2, R4 to 2 mV/°C.

160. The 1.4V bias is applied to the transistors via R1 and R2, with C2 acting as an RF bypass and dc blocking capacitor. R3 and R4 minimise the high frequency roll-off due to the input reactance of the transistors. The high tension supply to the collectors of VT1 and VT2 is via the broadband output transformer TR2, and is 28V in the high power condition and 10V in the low power and tune conditions, the voltage being selected by the power switch. In the receive condition the transmitter is disabled by the removal of the 1.4V bias, the collector voltage being present in both receive and transmit conditions.

161. Two sensing circuits are found in the output of the transmitter. Rectifier MR1 senses the voltage swing at the collector of VT1 for the purpose of voltage limiting (para 165). Rectifier MR2 rectifies a portion of the transmitter output and after filtering and bypassing by R6, C6 and C7, the resultant dc is fed back to the sidetone circuitry to operate the sidetone gate (para 199).

Automatic Level Control (ALC)

162. The automatic level control system maintains the pep output from the power amplifier at approximately 10W SSB and AM or 5W CW, on high power, and 1W on low power for all modes, when the RT unit is correctly matched to the antenna. In the event of the antenna not being correctly matched or tuned, the ALC system limits the output power to minimise intermodulation distortion.

163. The automatic control is achieved by sensing the collector voltage at VT1 in Part B, and the feed current to VT1 and VT2, and generating a control voltage which is used to reduce the gain of the RF amplifier. The gain is reduced only if either of these sensed quantities exceed preset values which depend on the mode and power switch setting.

Voltage Sensing

164. With no input signal to the power amplifier, the collector of 18-1VT1 rests at 28V. When a signal is present, the collector voltage swings about 28V and the cathode of MR1 follows it. The anode voltage of MR1 is the same as the emitter voltage of VT4 on Part A, which in turn follows VT4 base voltage. The base voltage is determined by the voltage divider R17, R18. The ratio of the divider can be modified by R16, which is either earthed directly, earthed via an 22 K ohm resistor (mounted on the mode switch) or open circuited, depending on the mode and power switch setting. Thus the anode voltage of MR1 on Part B and therefore the voltage sensing threshold is set by R16, R17 and R18 on Part A, and the setting of the mode and power switch via PLF8.

165. When the collector voltage of VT1 swings below the anode voltage of MR1, the diode conducts the transistor VT4 turns on. Its collector voltage then falls and turns on VT7 and the consequent rise in voltage across R27 turns on VT8. When VT8 turns on, its collector voltage drops below 10V and C9 becomes charged. As the voltage at VT8 collector falls, the control voltage at the emitter of VT10 falls by the same amount. This in turn reduces the current supplied to the controlled transistor in the RF amplifier. Its impedance rises and reduces the gain of the RF amplifier. The input signal level to the power amplifier is reduced, as is the collector voltage swing at VT1.

166. The fast attack is provided by the charging time of C9 via R29 and VT8. The slow decay is provided by the discharge time of C9 via R28 when VT8 is switched off. Diode MR3 provides the isolation necessary to enable the AGC and ALC systems to be commoned in the RF amplifier.

Current Sensing

167. When a signal is being amplified by 18-1VT1, 2, a direct current, proportional to the output current envelope, flows to the centre tap of 18-1TR2. This current flows through a 0.75 ohm resistor, 7-1R21, and the current sensing circuitry monitors the voltage across it. When the voltage exceeds certain prescribed values, which are set by the mode and power switch, the ALC current sensing circuitry operates and reduces the gain of the RF amplifier and hence the output level of the power amplifier.

168. The current sensing part of the ALC system operates in the following manner. If there is no current flowing to the output transistors and therefore no voltage drop across R21, both sections of the dual transistor 7-1VT5a and 7-1VT5b are brought just to the on state by the emitter-base currents flowing to earth via R22. However, almost all the current in R22 is supplied by VT5a, because any emitter-base current in VT5b causes a much greater current to flow in its emitter-collector circuit due to the current gain of the transistor. This current produces a voltage drop in R23 which reduces the emitter-base voltage of VT5b below that of VT5a. When a current flows through R21 the voltage drop across it is applied as an additional emitter-base voltage to VT5b. This causes the current in VT5b to increase and a voltage to be developed across R24. The threshold at which this voltage turns on VT6 is determined by VT6 emitter potential which is set by the mode and power switches via PLF6. When the current through R21 is sufficient to raise the base voltage of VT6 above its emitter, the drop in voltage across its collector load R19 turns on VT7 and the ensuing control action of the ALC system is the same as described under voltage sensing. Diode MR1 in the base circuit of VT6 is for temperature compensation purposes only.

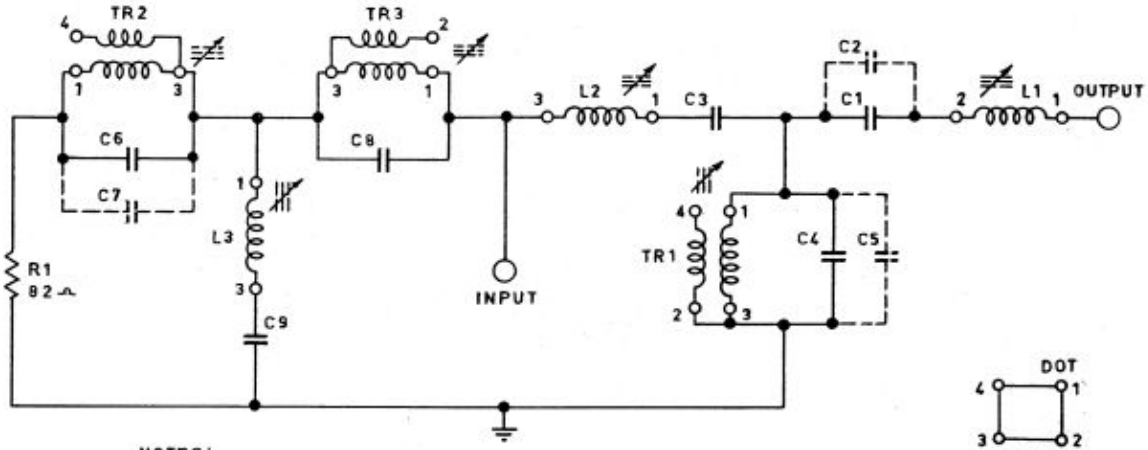

NOTES:
THE FIVE BANDPASS FILTERS ARE IDENTICAL IN CONFIGURATION.
COMPONENT VALUES ARE LISTED IN THE TABLE.
THE SECONDARY WINDINGS OF TR1–3 ARE NOT USED.

FREQUENCY RANGE	2–3MHz	3–4MHz	4–6MHz	6–8MHz	8–12MHz
CIRCUIT BOARD	7–3CB1	7–4CB1	7–5CB1	7–6CB1	7–7CB1
CAPACITORS — pF					
C1	1000	820	620	430	300
C2	200	—	—	—	—
C3	390	300	200	150	100
C4	1000	1000	680	510	360
C5	430	—	—	—	—
C6	1000	750	1000	750	560
C7	1000	750	82	—	—
C8	750	510	360	250	180
C9	820	560	390	300	200
INDUCTORS — μH					
L1	3·52	2·57	1·7	1·227	0·88
L2	10·8	7·04	5·28	3·52	2·64
L3	5·15	3·77	2·71	1·76	1·32
TRANSFORMERS — μH					
TR1	2·95	2·11	1·55	1·035	0·73
TR2	2·11	1·41	0·975	0·70	0·47
TR3	5·63	4·14	2·93	2·11	1·46
INPUT FROM	PLBB9	PLBB2	PLBB10	PLBB3	PLBB11
OUTPUT TO	PLBB6	PLBB14	PLBB7	PLBB15	PLBB8
CIRCUIT PREFIX	7–3	7–4	7–5	7–6	7–7

FIG 27 - BANDPASS FILTER UNIT

Protection Circuits

169. Two protection circuits operate in conjunction with the power amplifier Part B. One circuit, mounted on Circuit Board 18-2CB1, provides current protection, and the other, mounted on Circuit Board 18-3CB1, provides voltage protection. The combined action of these protection circuits prevents the output transistors from being damaged by voltage or current transients. These transients may occur under short or open circuit load conditions, or during antenna matching and tuning operations.

Current Protection

170. The current to the output transistors is sensed in 18-2R1. When there is no current flowing in R1, both sections of VT1 are brought just to the on state by the emitter-base currents flowing to earth via R4. Almost all the current in R4 passes through VT1b because any base current in VT1a causes a much greater emitter-collector current in VT1a and the consequent drop across R2 reduces the emitter-base voltage of VT1a below that of VT1b. An equilibrium condition thus exists. When a current passes through R1, the resultant voltage drop raises the emitter voltage of VT1a relative to VT1b, thus increasing the emitter-base current contribution of VT1a to the approximately constant current flowing in R4. Because of the current gain in VT1a an increased current flows in its emitter-collector circuit. Equilibrium is restored when the voltage drop in R2 just balances the voltage drop across R1, leaving the emitter-base voltages of VT1a and VT1b almost equal but with VT1a making a bigger contribution to the current in R4. Because the current gain of VT1a is high, its emitter current is approximately equal to its collector current; therefore the voltage drop across R3 is directly proportional to the voltage drop across R1. When the voltage drop across R3 exceeds a threshold determined by MR1, VT2 will turn on and its falling collector voltage will turn on VT3. Current then flows through VT3 and into VT4 and VT5 bases. The collectors of VT4 and VT5 are connected to the bases of the power output transistors, and, when turned on, present a low impedance shunt between each output transistor base and earth. This reduces the bias and hence the current in the output transistors.

Voltage Protection

171. The voltage protection circuit consists of a biased clipper. The clipping diodes 18-3MR2 and 3 are biased by the voltage across C1. This voltage is 1.8V, and is the difference between the 10V supply and the 8.2V drop across the zener diode MR1. When the instantaneous collector voltage tries to fall below 1.8V by more than 0.7V (the threshold voltage of MR2 or MR3) it is clipped. Because of the close coupling between the two collector windings of the output transformer, limiting the negative swing of either collector limits the positive swing of the other. The peak collector voltage is thus limited to twice the collector supply voltage.

Bandpass Filters

172. The transmitter output is fed to one of five pairs of complementary filters via a section of the kHz switch SWA. The filters are switched at both input and output, thus the four filters not in use at any time are completely isolated. The filters are arranged to cover five frequency bands: 2 to 3, 3 to 4, 4 to 6, 6 to 8 and 8 tc 12 MHz,the appropriate filter being automatically selected by the kHz x 1000 knob on the front panel when the RT set is switched to the assigned frequency. Each of the five filters consists of two separate filters, one to pass the transmitted frequency and stop all other frequencies, and the other to stop the transmitted frequenc and pass all other frequencies. The former filter passes the transmitted frequency to the antenna coupling circuits, and the latter passes all other harmonic frequencies to an 80 ohm resistive load (R1 in each filter). As the internal coupling circuit, when properly adjusted, will present 80 ohm to the filter at the transmitted frequency, it follows that the power amplifier will be terminated in 80 ohm at all frequencies. It should be noted, however, that under conditions of antenna mismatch or open circuit loads on the RT set, the power amplifier is always protected by the limiting action of the ALC system.

INTERNAL COUPLING CIRCUIT AND CURRENT METERING ASSEMBLY *(Fig 1005)*

General

173. The purpose of the Internal Coupling Circuit is to match the resistive component of either the 8-foot whip antenna or the wire antenna to 80 ohm and to tune out the reactive component of the wire antenna at the operating frequency. The circuit also matches the 50 ohm impedance of Coupler CU-F2 to 80 ohm.

174. The current metering circuit provides a dc voltage proportional to antenna current. This voltage is used to vary the frequency of the tune oscillator (on the sidetone and audio board), thus producing an audible indication of antenna tuning and matching (para 197).

Internal Coupling Circuit

175. In order to cover the range of antenna impedances encountered, an impedance matching auto transformer, 12-3TR1, is used. This is a toroidal inductor with one fixed tap at 80 ohm and 14 taps switched by the MATCH switch 12-3SWA on the front panel of the RT set. To tune out stray capacitances present in the switch wiring, inductances L1 to L10 are connected in series between the 80 ohm tap on 12-3TR1 (tap 8) and ground, and are switched into circuit by section 2R of the MHz switch 11SWA.

176. When the whip antenna is in use, section 1R of the MHz switch 11SWA connects the antenna via its input socket SKFF to the appropriate tap on the auto transformer. A simplified circuit is given in Fig 28.

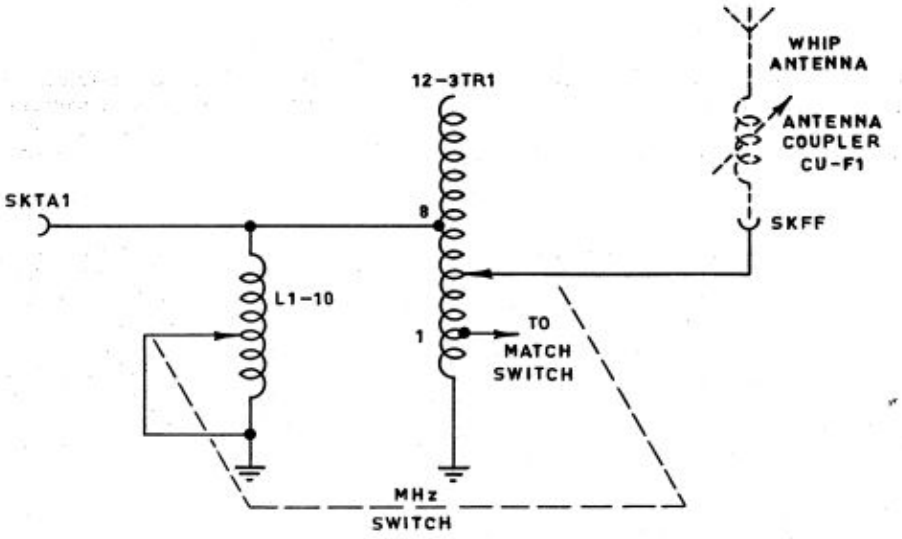

FIG 28 - WHIP ANTENNA MATCHING

The reactive component of the whip antenna impedance is tuned by the Coupler CU-F1 at the base of the antenna. Position 1 of the MATCH switch 12-3SWA section 1 F, i.e., the fully anti-clockwise position, is designated O on the front panel. The control must be set to this position whenever the whip antenna or the Coupler CU-F2 is used.

177. When the wire antenna (connected to SKGG) is employed, the antenna is connected to the appropriate tap on the auto transformer by the MATCH switch 12-3SWA, section 1 F. Section 1R of the MHz switch is inoperative when the whip antenna is not connected. The reactive component of the antenna is tuned by a combination of inductive or capacitive circuits, switched by the TUNE and FINE controls (designated 12-4SWB and 12-4SWA, respectively) on the front panel. These two controls are mechanically linked in such a way that one revolution of the FINE control steps the TUNE control one position. The configurations for various switch settings are given in the simplified diagrams below.

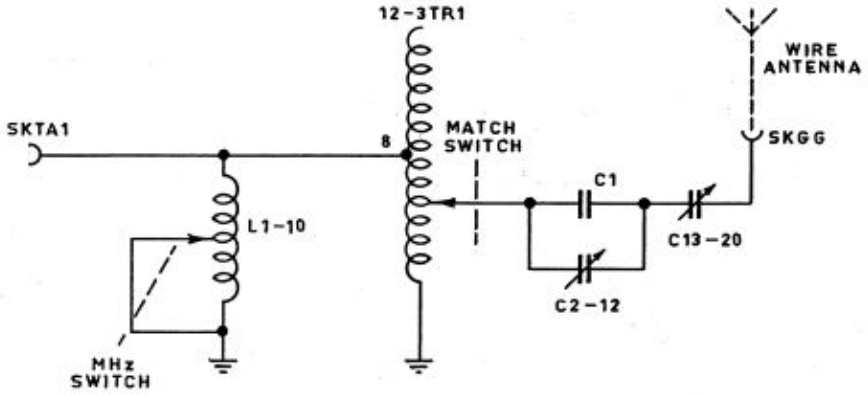

Fig 29. - WIRE ANTENNA MATCHING

Fig 29 gives the situation for 12-4SWB/1R in positions 2 to 9. In position 10 no capacitance is in series with C1/C2-12.

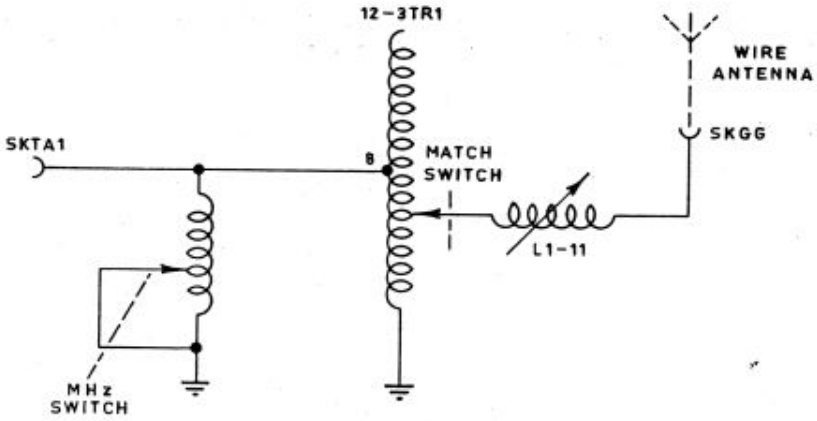

FIG 30 - WIRE ANTENNA MATCHING

Fig 30 gives the situation for 12-4SWB/1R in position 11. Position 12 introduces L12 in series with L1-11. Section 1F of the FINE control 12-4SWA switches the inductances L1-11, section 2R the capacitors C2-12. Section 2F is arranged to parallel C9-12 in order to achieve the high capacitance values required. When section 2R wiper reaches position No 6, C10 is paralleled with C9; when the wiper moves on to position No 7, C11 is paralleled with C10, C9, etc.

Current Metering Assembly

178. The current metering circuit operates in one of two modes. Firstly, when the whip antenna is connected, the circuit provides an output voltage proportional to the power amplifier output current, I_1. Secondly, when the wire antenna is connected, the circuit provides an output voltage proportional to the current I_2, flowing into the wire antenna.

(a) Mode 1 - Since the wire antenna is not connected in this mode, no voltage is induced in current transformer 12-2TR2. The signal from 12-2TR1, however, is rectified by MR1, and a positive voltage is established on C1. Since the cathode of MR2 is always positive in this mode, MR2 isolates C2 and R5. The output to the tune oscillator is taken from voltage divider R3, R4. The equivalent circuit of mode 1 is shown in Fig 31.

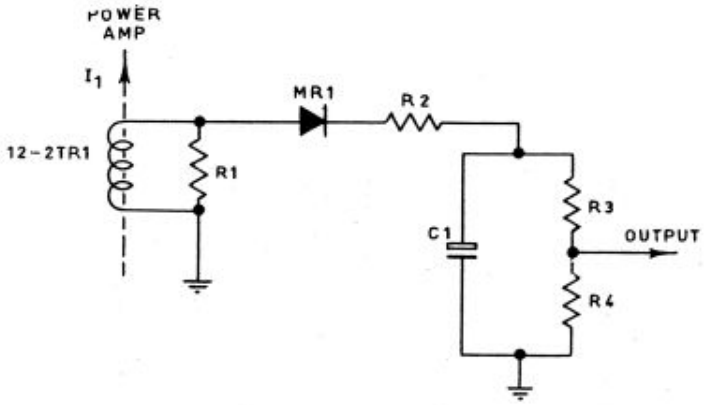

FIG 31 - CURRENT METERING, MODE 1

(b) Mode 2 - For any given value of the PA output current I_1, the wire antenna current may lie between 0.65 I_1 and 1.75 I_1, corresponding to the design limits of antenna resistance. The component values are so arranged that for these ratios of I_1 and I_2, MR1 is always reverse biased. Thus MR1 isolates 12-2TR1, and the equivalent circuit is as in Fig 32.

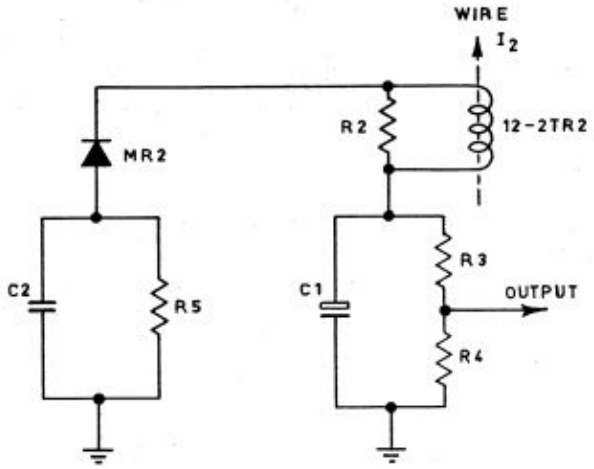

FIG 32 - CURRENT METERING, MODE 2

The capacitor C1 is large enough to maintain a steady output voltage, and hence tuning tone, during the short breaks in RF current which occur while the matching and tuning controls are being manipulated.

COUPLER, ANTENNA, CU-F1 (Fig 33)

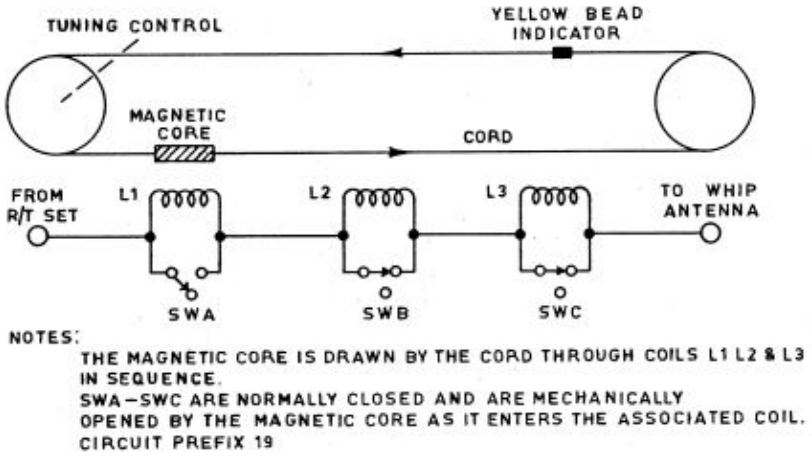

FIG 33 - COUPLER, ANTENNA, CU-F1

179. The coupler is essential for the operation of the 8 ft whip antenna. It is attached to the RT unit by means of a plug and screw socket, above which a helical spring allows partial movement of the coupler. The RF current is not carried by the spring but by a braid through its centre. The bottom section of the whip antenna fits into a socket on the top of the coupler and is secured by a screw collet. A small knob provides the tuning control, and a travelling indicator, visible through a window in the side of the coupler, gives an approximate indication of the tuning position in terms of frequency. The correct tuning procedure is described in the User Handbook, Radio Set PRC-F1.

180. The coupler housing consists of two detachable sections, held together by a threaded collar. The electrical components of the coupler are mounted on a perspex assembly, contact being made with the antenna socket at the top of the housing, and with the plug at the bottom, by spring contacts. The knob is geared to a drive pulley by a reduction gear. A drive cord is attached to both ends of a magnetic core and runs over a guide at the top of the assembly, whilst at the bottom three turns are taken round the pulley. The core travels up and down the inside of the coil former on which the three tuning coils L1, L2 and L3 are wound. On a perspex strip adjacent to the coil former are situated three micro-switches, SWA, SWB and SWC. These micro-switches are normally closed but are mechanically opened by a small plastic leader attached to the end of the magnetic core, so that the switch is opened just prior to the core entering the field of the associated coil. The inductance of L1-3, and the point at which the microswitches operate, are designed to enable the 18 pF capacity of the whip antenna to be tuned out between 2.0 MHz and 12.0 MHz.

IF AMPLIFIER, AGC AND BFO BOARD (Fig 34, 35)

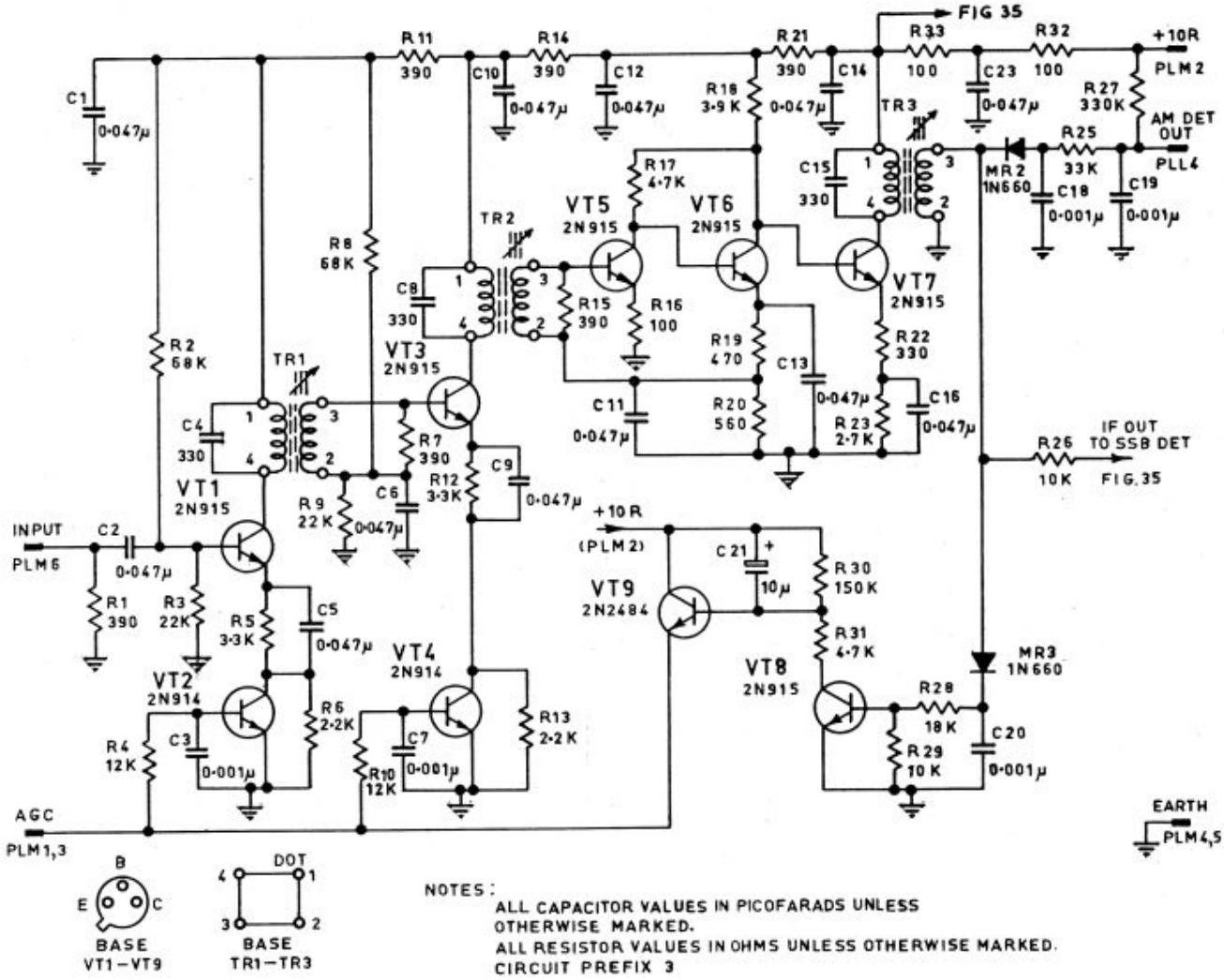

FIG 34 - IF AMPLIFIER, AGC CIRCUIT AND AM DETECTOR

General

181. The incoming IF signal is fed to a 5-stage, gain controlled amplifier whose output feeds two detector circuits and an AGC rectifier. The type of detector used is determined by the reception mode, and is selected by the mode switch. For AM reception a simple half wave envelope detector is used. For SSB, CW1 and CWN the 500 kHz local carrier is mixed with the incoming signal and demodulated by a envelope detector. The 500 kHz local carrier passes through the receiver carrier gate, which is controlled by the mode switch and opens only in the SSB, CW1 and CWN modes. For CW2 the output of the variable frequency BFO is used in place of the fixed frequency local carrier and the combined signal is demodulated by the SSB detector diode. The AGC is derived by rectifying part of the IF amplifier output to provide a voltage which controls the impedance of two transistors which are used as variable feedback elements in the first two stages of the amplifier. The AGC voltage is also used to control the RF amplifier gain.

Receiver IF Amplifier

182. This is a 5-stage amplifier comprising two tuned transformer coupled stages VT1 and VT3, gain controlled by the variable impedance transistors VT2 and VT4 respectively, in the emitter circuits. These are followed by a 3-stage, broad band, direct coupled amplifier VT5, VT6 and VT7, the output being coupled by a single tuned transformer TR3 to the detector and AGC circuits.

183. The maximum voltage gain, with the AGC inoperative is approximately 20,000 from the input to the secondary of TR3. Each of the gain controlled stages has a maximum gain reduction of about 25 dB, so the overall voltage gain varies between approximately 86 dB and 36 dB. The AGC maintains the output at TR3 substantially constant for input signals greater than 90 μV at PLM6.

184. The first two stages (VT1 and VT3) are similar in circuitry, each employing a type 2N915 amplifer with tuned transformer coupling in the output. The gain of each stage is controlled by VT2 and VT4 respectively, which act as variable impedances in the emitter circuits, thus introducing a variable amount of feedback (para 188). The direct coupled stages VT5, VT6 and VT7 are also type 2N915 amplifiers. The unbypassed emitter resistor R16 provides negative feedback at the signal frequency for VT5. Shunt feedback from VT6 collector to VT5 collector is provided by R17, and series feedback for VT7 by R22. A dc feedback loop R19, R15 from VT6 emitter to VT5 base stabilises the bias. The feedback is bypassed at the signal frequency by C11.

185. The amplifier is energised from the 10R power line while the RT unit is in the receive condition. Progressive collector supply decoupling from the output stage to the input stage is provided by the series resistors R32, R33, R21, R14 and R11, together with the associated bypass capacitors.

AGC Circuit

186. The AGC circuit provides a control voltage at the AGC line of +0.6V to +8V dc when the envelope of the signal at the receiver IF amplifier output exceeds a predetermined threshold value. This control voltage reduces the gain of the controlled stages in the IF amplifier and thus maintains the amplifier output at a substantially constant level.

187. When the applied signal exceeds the threshold value (approximately 90 μV, giving about 1.8V at TR3 secondary) the AGC detector diode MR3 and transistor VT8 conduct, rapidly charging C21 and causing the potential at the base of VT9 to swing from the quiescent value of 10V to a low value. The response time for a step increase in signal level is thus determined by the time constant of R31 and C21 (approximately 0.05 sec). If the signal level falls, VT8 turns off and C21 discharges through R30, and the base of VT9 rises slowly to +10V. The release time is approximately 1.5 sec.

188. The AGC voltage is fed via emitter follower VT9 to the controlled stages. The impedance of the collector-emitter circuit of these control transistors is a function of the base current, which depends on the base bias from the AGC line. With no AGC, the bases of VT2 and VT4 in the IF amplifier are at about +8V and these transistors are switched hard on, providing a low impedance for the emitters of VT1 and VT3. As the signal voltage rises above the threshold value and VT8 conducts, the voltage at VT9 base falls. Since VT9 is an emitter follower the emitter voltage follows the base voltage. The voltage at the bases of VT2 and VT4 is progressively reduced, and the impedance rises to provide progressively higher feedback and consequent reduction of gain in VT1 and VT3. Resistors R6 and R13 limit the range of control by setting an upper limit to the emitter impedance.

189. The AGC voltage is also used to control the gain of the RF amplifier, but in this case an adjustable voltage delay is introduced (para 150 - 151).

AM Detector

190. The AM detector is used for demodulation of AM signals. It is a simple half wave envelope detector driven from the secondary of TR3, with the diode forward biased by returning R27 to the supply voltage line. The forward bias allows demodulation of signals of low modulation percentage without clipping, which would occur owing to the turn-on voltage (0.6V) of the diode. Distortion is also minimised by operating the detector at a high signal level. RF filtering is provided by C18, R25 and C19.

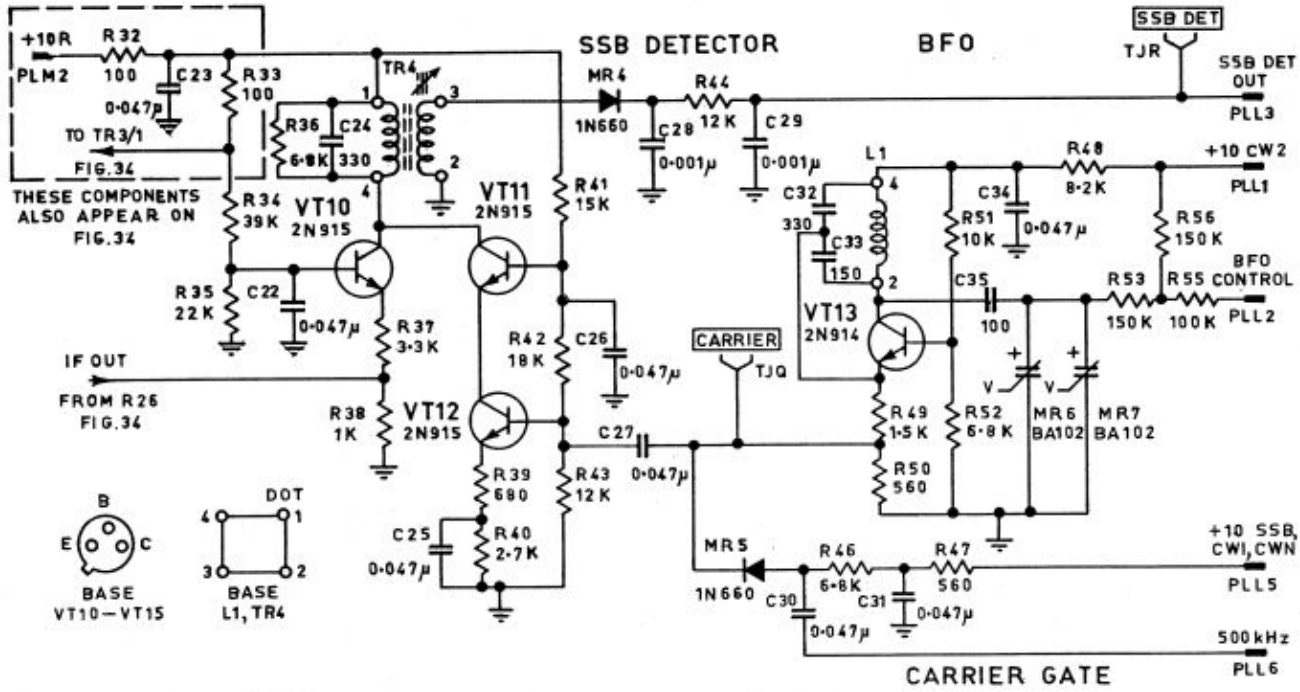

NOTES:
ALL CAPACITOR VALUES IN PICOFARADS UNLESS OTHERWISE MARKED.
ALL RESISTOR VALUES IN OHMS UNLESS OTHERWISE MARKED.
CIRCUIT PREFIX 3

FIG 35 - SSB/CW DETECTOR, RECEIVER CARRIER GATE AND BFO

SSB/CW Detector

191. The IF amplifier output from TR3 is fed via R26 to the emitter of a grounded base isolating transistor VT10 and thence to the primary of transformer TR4, where it is added to the 500 kHz local carrier. The grounded base configuration for VT10 is used to provide the low reverse transmission necessary to prevent leakage of the carrier back to the AGC detector. The 500 kHz carrier is amplified by a cascode isolating stage VT11 and VT12. The carrier and the IF signal are added in the primary of TR4 and the combined signal is demodulated by an envelope detector MR4 and fed via the RF filter C28, R44 and C29 to the SSB output and also to a test jack TJR for monitoring purposes. Demodulation of SSB signals with low distortion in the envelope detector is accomplished by making the carrier level much larger than the signal level. Because of the large carrier level, forward biasing of the detector diode is unnecessary. A test jack TJQ is provided to monitor either the local 500 kHz carrier or the output of the beat oscillator.

Receive Carrier Gate

192. The receive carrier gate is a diode switch MR5 actuated by a control voltage of +10V at PLL5. When the control line is open circuited in the AM and CW2 modes, diode MR5 becomes a high impedance at 500 kHz and disconnects the carrier from the SSB/CW detector. When the SSB, CW1 or CWN modes are used, MR5 is forward biased by the application of +10V dc. The diode then has a low impedance at 500 kHz and the carrier is applied to the detector via C30, MR5, C27, VT12 and VT11.

Beat Frequency Oscillator

193. The BFO is a variable frequency oscillator which is energised from the 10R supply by the mode switch and becomes the source of carrier for the SSB/CW detector when the CW2 mode is selected. A common base configuration is used for the oscillator VT13, with feedback from the collector to emitter via a capacitive voltage divider across the collector tuned circuit. The variable tuning is provided by varactor diodes MR6 and MR7 (in series with C35) placed across the tuning inductor L1. The use of varactor diodes allows remote control of the frequency by a dc voltage from the front panel BFO control. The capacitor C35 is included to allow a large voltage swing at the collector before clipping occurs in the varactor diodes.

194. A low collector voltage (approximately +4V dc) restricts the voltage swing at the collector to allow a low dc control voltage to be used without clipping of the collector waveform by the varactor diodes. Resistors R56 and R55 restrict the reverse bias applied to the varactors to a value between +4 and +10V for an input control voltage range of 0 to +10V applied via PLL2 from the BFO control. The frequency range of the BFO is 496 kHz to 504 kHz for control voltages between 0 and +10V dc.

SIDETONE AND AUDIO BOARD *(Fig 36)*

General

195. The sidetone and audio board carries six sub-circuits, as shown in the circuit diagram Fig 36.

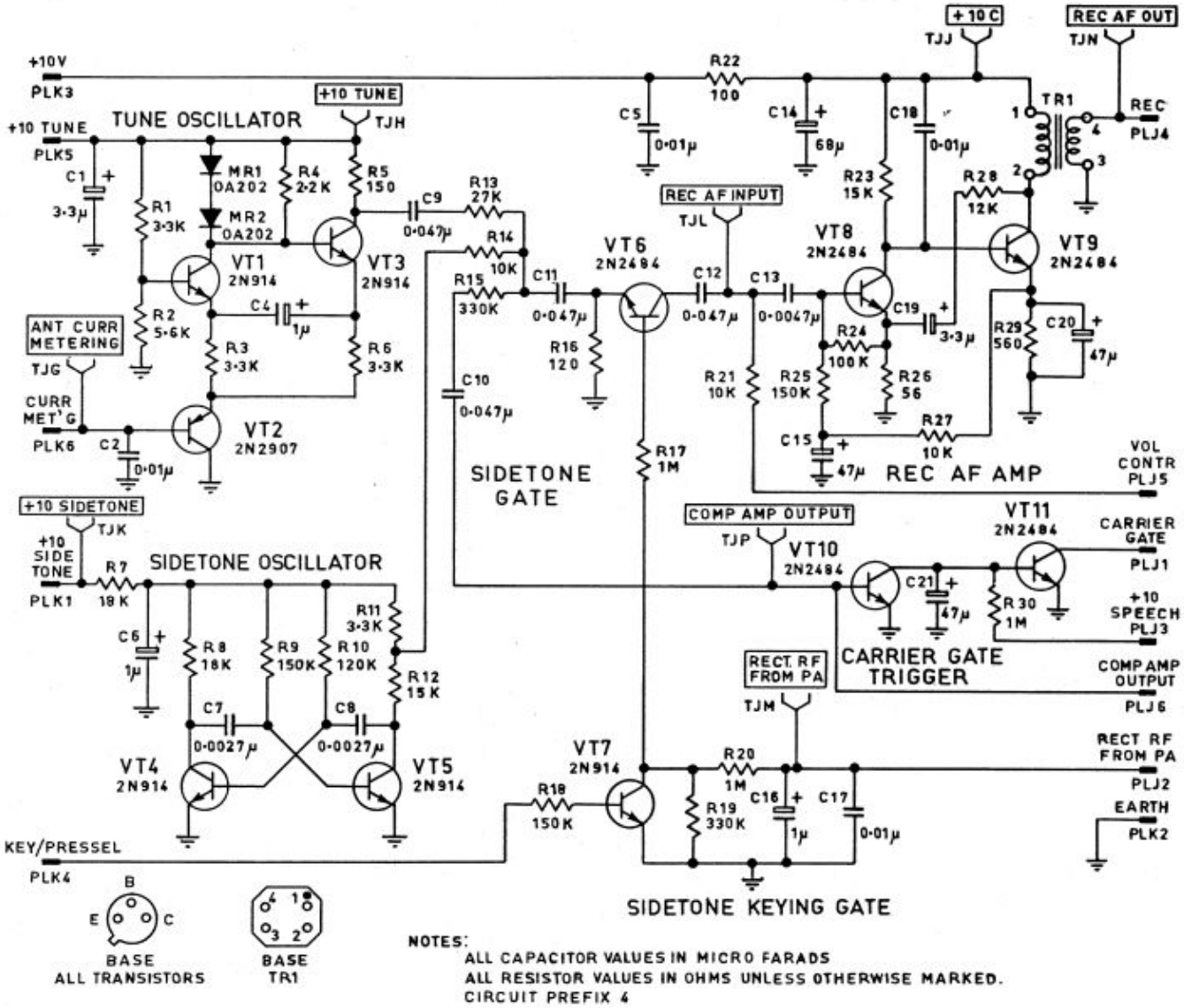

FIG 36 - SIDETONE AND AUDIO BOARD

The outputs from the tune oscillator and the sidetone oscillator, and the output from the compression amplifier are fed via isolating resistors R13, R14 and R15, respectively, to the sidetone gate. During transmission, the appropriate sidetone source is energised by the power and the mode switches, as shown in the PRC-F1 Block Schematic, Fig 1002. Sidetone is then fed to the input of the audio amplifier via the sidetone gate VT6. This gate passes the sidetone signal to the audio amplifier when it is opened by passing a small current into its base. The sidetone keying gate ensures that this current is passed into VT6 base only when output power is being delivered by the power amplifier. The oscillators and gates are energised during transmission by 10V dc from the 10T power supply circuit (para 53). During reception the sidetones are not used and the demodulated signal from the receiver is fed via the volume control to the input of the audio amplifier.

Audio Amplifier

196. This is a conventional 2-stage amplifier comprising VT8, ac coupled from the volume control and dc coupled to VT9, the output amplifier. Feedback via R28 and C19 from the collector of VT9 to the emitter of VT8 stabilises the gain and reduces distortion, and dc feedback via R27 is used to obtain bias stability. The output is transformer coupled to the receiver earpiece or the handset. The audio amplifier is powered from the 10C supply line which is continuously energised.

Tune Oscillator

197. The tune oscillator is energised from the 10T line only when the power switch is set to TUNE. Its function is to provide a variable frequency tone which is at a minimum (but not zero) when the antenna coupling circuits are correctly adjusted for maximum RF current into the antenna. The tune oscillator is a variable frequency emitter coupled multivibrator VT1, VT2 and VT3. Frequency variation is achieved by controlling the potential on the emitter of VT2. The base of VT1 is held at a constant potential by resistors R1 and R2. Diodes MR1 and MR2 clamp the collector voltage when VT1 is switched on. With VT1 switched off and VT3 switched on, there is a very small voltage drop across R4 and VT1 collector is virtually at +10V potential. Since the emitters of VT1 and VT3 are coupled by C4 there will be a change of voltage at the emitters equal to the clamp voltage across MR1 and MR2 when the multivibrator changes state in either direction. The period is controlled by the time taken for C4 to charge alternately through R3 and R6 from the voltage at VT2 emitter. Thus the period varies as the voltage on VT2 emitter and hence as the voltage on VT2 base. With no control voltage at VT2 base the oscillator output is a high pitched signal of approximately 1.4 kHz. A current metering circuit in the internal coupling unit provides a voltage which increases as the antenna current increases with adjustment of the RT unit MATCH and TUNE controls. This voltage is applied to VT2 as base bias, thus controlling the emitter voltage and hence the frequency of the oscillator. The pitch of the tuning tone passes through a minimum as the antenna current reaches maximum, and thus gives a clear indication of antenna tuning.

Sidetone Oscillator

198. The sidetone oscillator is a simple astable multivibrator circuit comprising VT4, VT5 and associated components, and oscillates at a frequency of approximately 2 kHz. It is energised from the 10T supply via the mode switch when set to CW1, CWN or CW2.

Sidetone Gate

199. The sidetone gate consists of a single transistor VT6, controlled by the side-tone keying gate. The base of VT6 is normally at earth potential via R17 and R19 and the transistor is switched off. A positive gating from VT7 collector is required to make it conduct. This positive signal is provided by the sidetone keying gate (para 200). The appropriate sidetone is then fed to the input of the audio amplifier.

Sidetone Keying Gate

200. The sidetone keying gate permits sidetone (speech, or tone for telegraphy) to be heard only when there is output power from the transmitter. This is achieved by rectifying a small portion of the output RF power to provide a positive voltage which enters the sidetone and audio board at PLJ2 and passes via R20 to R17 and produces the turn-on current for VT6. The capacitor C16, which is charged via PLJ2 (and discharges through R19, R20 when VT7 is turned off) maintains a steady positive voltage between speech peaks. Provided the pressel is held, or the telegraph key depressed, the base of VT7 is earthed and VT7 is turned off. This allows VT6 to be turned on by the positive voltage obtained from the transmitter output, and speech or telegraph tone is heard. The reason for controlling the sidetone gate VT6 both from the transmitter output and also from the key/pressel circuit is that the capacitor C16 required for speech operation does not allow the morse code envelope to pass and key VT6 directly. When the key or pressel is up, 10V is applied at PLK4 and the resulting current through R18 saturates VT7. As the saturation voltage of VT7 is below the turn-on voltage of VT6, the output from the sidetone oscillator is blocked from the audio amplifier.

Carrier Gate Trigger

201. The output from the compression amplifier is fed to the sidetone gate (para 199). and is also fed to the carrier gate trigger, which is not part of the sidetone circuitry but is included on this board for convenience. The function of the carrier gate trigger is to remove the carrier (500 kHz) when speech is not present while the SSB or AM mode is in use. In these modes the transmitter automatic level control circuits would bring the unmodulated carrier up to peak envelope power, resulting in unnecessary high dissipation in the output stage. When speech is present at the compression amplifier output, VT10 conducts and C21 is rapidly discharged to earth. VT11 is biased off, since the saturation voltage of VT10 is less than the turn-on voltage of VT11. The collector of VT11 is connected to the base of VT1 in the carrier amplifier on the modulator board (Fig 24). When VT11 is biased off the amplifier functions normally, but when VT11 conducts the carrier amplifier is biased off and the input is short circuited to earth. On the cessation of speech, C21 charges slowly through R30 until VT11 conducts and cuts off the carrier. The release time is approximately 3 seconds to allow for pauses in speech. It will be noted that the output of the compression amplifier is clipped on the lower peaks by MR4 in the compression amplifier (Fig 22), and is clipped on the upper peaks by the base-emitter diode of VT10 in the carrier gate trigger.

10V REGULATOR AND BATTERY TEST CIRCUIT *(Fig 38)*

General

202. The 10V Regulator incorporates two voltage sources of 10V each. One output supplies a constant load at 50 mA, and the other a varying load between 30 and 350 mA. The outputs are designated 10C and 10CC, respectively (para 51-53). The input to the regulator is either the internal battery voltage (which may vary between 24 and 32 volts) or an external 28V supply. The Battery Test Circuit lights a lamp on the front panel of the RT set when the WHISPER-SPEECH-BAT switch is held in the BAT position and the battery voltage is capable of operating the RT set at normal output power.

Regulator

203. The regulator employs a transistor switch controlled by a comparator circuit. Protection circuits are provided to guard against overload and to limit the starting current through the transistor switch.

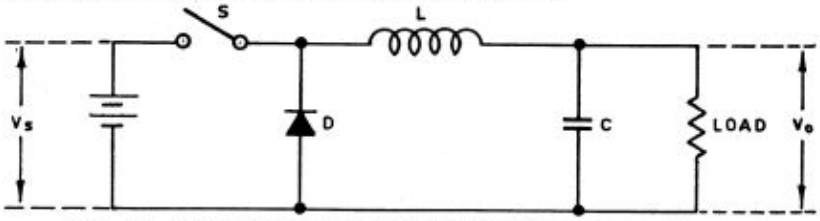

FIG 37 - BASIC CIRCUIT OF SWITCHED VOLTAGE REGULATOR

204. Fig 37 shows the basic circuit of the voltage regulator. The supply voltage V_s is greater than the output voltage V_o. When the switch S is closed, a steadily increasing current flows from the supply through inductor L into capacitor C, and energy, in the form of flux, is stored in L. When S is opened, current ceases to flow from the supply. As the flux in inductor L collapses, a steadily decreasing current continues to flow from it into the capacitor C, the circuit now being completed by diode D. During the whole cycle, capacitor C is discharging through the load resistor.

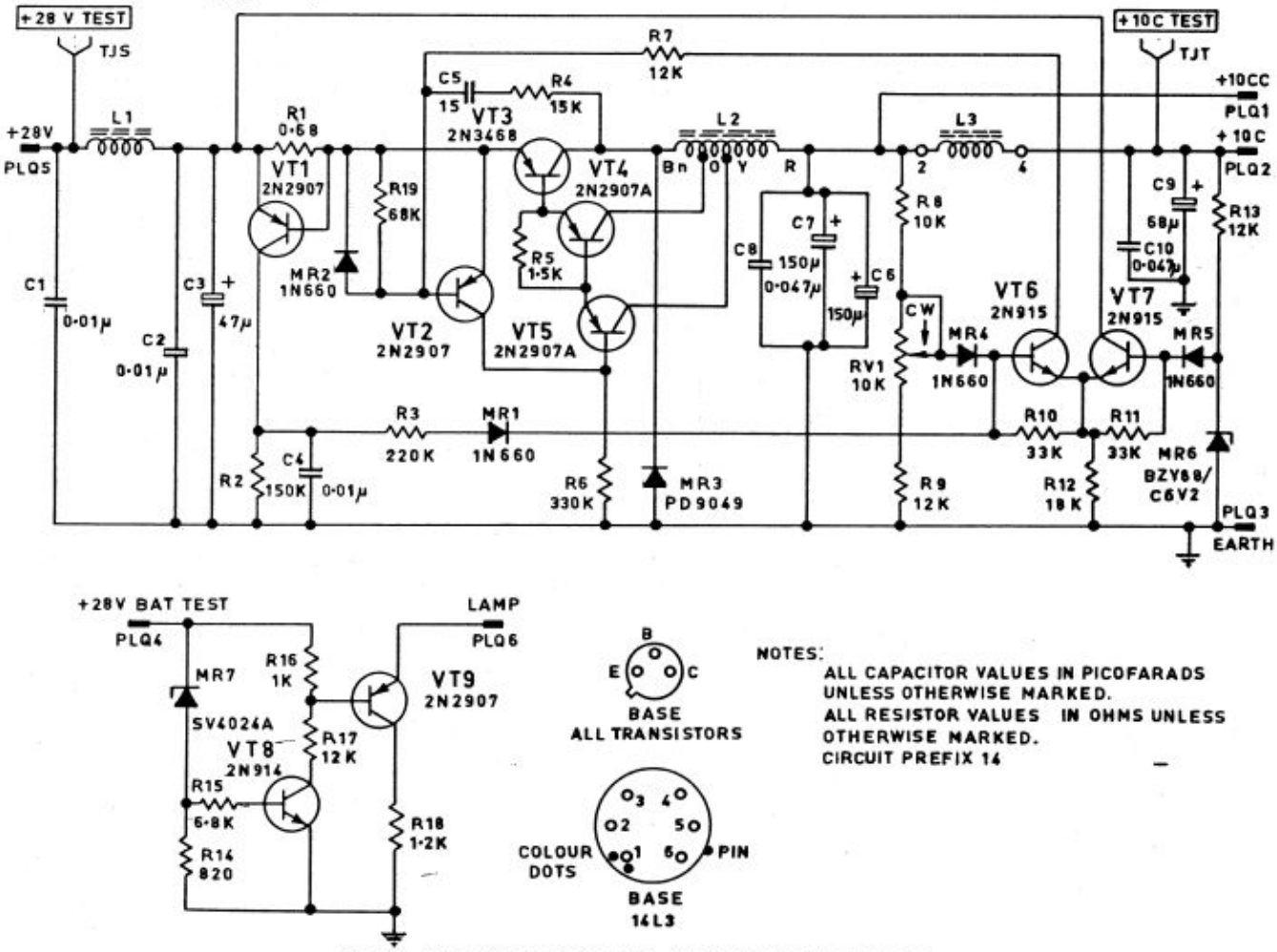

FIG 38 - 10V REGULATOR AND BATTERY TEST CIRCUIT

205. The transistor switch VT3 forms a compound connection with VT4 and VT5. Due to the current gain of VT4 and VT5, considerably less current is required to drive the base of VT5 than would be required to drive the base of VT3 directly. The compound connection also increases efficiency, since the base currents of VT3 and VT4 are not dissipated, but returned to the load via taps on L2.

206. The switching action of VT3 is as follows. Initially, R6 connects VT5 base to approximately earth potential. If the comparator transistor VT6 is in the off state, no current will flow in R19, which is part of the collector load of VT6. Since there is no voltage drop in R19, VT2 will be switched off and a base current will flow into VT5, causing VT4 and then VT3 to conduct. If the comparator VT6 is switched on, the voltage drop across R19 will turn on VT2, thus reducing the voltage at the base of VT5 below the turn-on value, and the transistor will be switched off.

207. The feedback circuit R4, C5 speeds up the switching action in the following manner. When VT6 begins to turn on and VT3 begins to turn off, VT3 collector voltage falls to approximately earth potential via MR3. An additional path is provided by R4 and C5 for current to flow from the base of VT2, thus assisting VT2 to turn on and VT3 to turn off. Conversely, when VT6 begins to turn off, VT3 begins to turn on and the voltage at its collector rises. This rising voltage is applied via R4, C5 to the base of VT2, thus assisting VT2 to turn off and consequently, VT3 to turn on.

208. The switching action of VT3 in conjunction with inductor L2 serves to charge the reservoir capacitors C6 and C7, directly from the input supply via VT3 and L2 during the ON period. During the OFF period, the energy stored in L2 is released and continues to charge the reservoir capacitors via MR3.

209. The comparator circuit comprises VT6, which samples the output voltage across R8, RV1 and R9, and compares it with a reference voltage at the base of VT7, established by zener diode MR6. When the voltage at VT6 base becomes equal to or greater than the reference voltage, VT6 turns on, thus turning off the transistor switch (para 206). When the output voltage falls, VT6 is switched off, thus allowing VT3 to switch on again.

210. Resistor R1 is a current sensing element and forms part of the protection circuitry designed to protect VT3 against the initial current surge which occurs when the regulator is first switched on. When this current surge produces a voltage across R1 equal to the switching-on potential of VT1, current will flow through VT1, charging capacitor C4. The voltage across C4 is applied to the comparator circuit VT6, VT7 in such a manner as to switch off VT3. The latter is held in the off state until C4 has discharged whereupon VT3 switches on again and the cycle repeats itself. This continues until such time as C6 and C7 are sufficiently charged to limit the current through R1 to a value below the switching-on potential of VT1. At this stage the current limiting circuit becomes inoperative and the switching operation continues with the regulation controlled by the sensing network R8 and R9.

211. In the event of an overload or short circuit being applied to the regulator, the protection circuit acts in the same way as for the starting surge and limits the current through VT3 to a safe value. When the fault is removed, the regulator reverts to normal operation.

212. The input filter L1, C1, C2 is inserted to prevent interference caused by the switching action of the transistor switch from reaching other modules in the receiver-transmitter. Capacitor C3 provides a low impedance source to the transistor switch. Diode MR2 protects the base-emitter junction of VT2 from exceeding its reverse voltage rating. Resistor R19 ensures that sufficient current is drawn by the collector of VT6 for satisfactory operation. Diode MR3 completes the current circuit for L2 during the off periods of the transistor switch. Diodes MR4 and MR5 are used in the base circuits of the voltage comparator transistors to prevent their voltage and junction dissipation ratings from being exceeded. Diode MR1 isolates the protection circuit under normal operating conditions. The filter L3, C9 reduces the ripple in the output voltage.

Battery Test Circuit

213. When the WHISPER-SPEECH-BAT switch is held in the BAT position, the battery voltage is applied between PLQ4 and earth. The indicator lamp on the control panel is connected between PLQ4 and PLQ6 (PRC-F1 Block Schematic Fig 1002). If the battery voltage exceeds approximately 24.5V, zener diode MR7 conducts, transistor VT8 switches on, which in turn causes VT9 to be switched on. The circuit from the battery through the lamp, the emitter-to-collector path of VT9 and R18 to earth is now completed and the lamp lights. If, however, the battery voltage is below approximately 24.5V, the zener diode MR7 does not conduct. In this case the transistors are not switched on and the lamp does not light.

214. Resistor R15 limits the base current of VT8 to a safe value. Resistors R16 and R17 control the lamp voltage by setting the base voltage of emitter-follower VT9. Resistor R18 limits the dissipation in VT9 by reducing the voltage across it and also protects VT9 in the event of a short circuit across the lamp terminals.

1.4V REGULATOR (Fig 39)

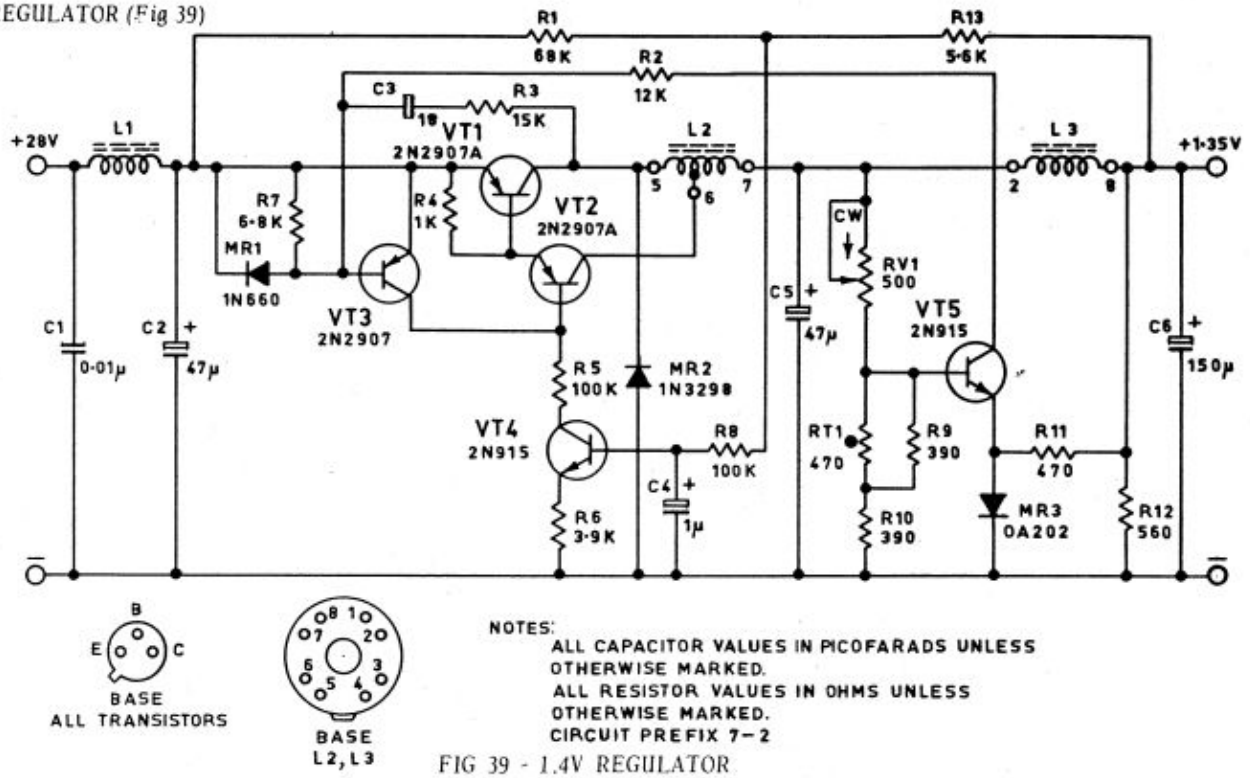

FIG 39 - 1.4V REGULATOR

215. The purpose of the 1.4V regulator is to produce the base bias voltage for the output transistors in the transmitter power amplifier. The bias requirement is for a voltage which is adjustable over a small range about a mean value of 1.4V and which has a temperature coefficient of 4 mV/°C between −20 and +71°C. The main regulating transistor operates in its switching mode, in conjunction with a storage capacitor, inductor and diode, the basic principles of which are described in para 204.

216. The transistor switch VT1 forms a compound connection with VT2. Due to the current gain of VT2, considerably less current is required to drive the base of VT2 than would be required to drive the base of VT1 directly. The compound connection also increases efficiency, since the base current of VT2 is not dissipated, but returned to the load via a tap on L2.

217. The switching action of VT1 is as follows. Assume VT4 is saturated, then R5 connects VT2 base to approximately earth potential. If the comparator transistor VT5 is in the off state, then no current will flow in R7, which is part of VT5 collector load. Since there is no drop across R7, VT3 will be in the off state. Under these conditions, base current will flow through R5 into VT2, causing VT1 to conduct. If the comparator transistor VT5 is in the on state, the voltage drop across R7 will turn VT3 on. The voltage across VT3 falls to the saturation value, which is below the turn-on voltage of VT2. VT1 and VT2 now go into the off state. The switching on and off of VT1 is speeded up by the feedback path R3/C3 which operates as follows. As already explained, when VT5 begins to turn on, VT3 also begins to turn on and VT1 starts to turn off, its collector voltage falling to approximately ground potential due to the action of MR2. R3/C3 then provide an additional path for current to flow from the base of VT3, thus assisting VT3 to turn on and, consequently, VT1 to turn off.

218. In the reverse case, when VT5 begins to switch off, VT1 begins to switch on and the voltage at its collector rises. This rising voltage is applied via R3/C3 to the base of VT3 thus assisting VT3 to turn off and, consequently, VT1 to turn on.

219. The switching action of VT1 in conjunction with the inductor L2 serves to charge the storage capacitor C5, both directly from the supply via VT1 and L2 during the on period and indirectly by the release of stored energy from L2 during the off period when MR2 causes the potential at VT1 collector to fall to approximately ground potential.

220. The comparator circuit maintains the output voltage at approximately 0.3V above the sum of the turn-on voltages of MR3 and VT5. When the voltage at the-base of VT5 rises above the turn-on bias, VT5 conducts, VT1 turns off in the manner previously explained and the output voltage falls. When the output voltage falls below the turn-on bias, VT5 turns off, VT1 turns on and the output voltage rises. Thus the output voltage is maintained at a constant level by the combined action of the comparator and the switching transistor VT1.

221. Transistor VT4 serves to limit the high current which would otherwise flow from the supply via VT1 into C5 during the initial switch-on period. The action of R8/C4 allows the base voltage of VT4 to rise slowly, as C4 charges after the initial switch on. VT4 will therefore slowly increase its collector current to saturation, this in turn causing VT2/VT1 to turn on slowly. The rate of charge of C4, and hence the rate of current increase through VT1 is adjusted to limit the peak current during the switch-on surge to a safe value.

222. The inductor L3 and capacitor C6 provide additional smoothing of the output voltage. Resistor R12 provides an internal current bleed which is necessary for satisfactory operation when the external load of 22 ohms (provided by the transmitter) is disconnected in the receive condition. Capacitor C2 provides a low impedance source for the regulator. Inductor L1 and capacitor C1 prevent RF interference, generated by the switching circuits, from feeding back into the RT unit. The variable resistor RV1 allows the required small change in output voltage (para 215) to be made. The required temperature coefficient of the output voltage is almost achieved by the natural temperature coefficient of MR3 and the base-emitter junction of VT5, while the thermistor RT1 provides the small additional coefficient necessary. Diode MR1 protects the base-emitter junction of VT3 from exceeding its reverse voltage rating. Resistor R11 ensures that the diode MR3 always operates above its knee voltage.

TRANSMIT-RECEIVE RELAYS, MODE AND POWER SWITCH

Transmit-Receive Relays (Fig 1002)

223. Four relays are employed to switch the RT unit between transmit and receive. The relays are of a minature latching type and are operated by current pulses of 20 mS duration, thus consuming no current except at the moment of changeover.

224. The 20 mS pulse is provided by the relay drive circuit in the compression amplifier and relay drive board, whose operation is described in para 116-125. The function of each contact set, together with the contact numbering, is shown in the PRC-F1 Block Schematic, Fig 1002, and listed in Table 4 below.

TABLE 4 – FUNCTIONS OF RELAY CONTACTS

Relay	Contact No	Function		
		Common	Transmit	Receive
RLA	1		DC bias – RF amp gain setting	
	2	AGC/ALC to RF amp		
	3			AGC line
	4	+28V, Tx coil		
	5	Drive circuit, Rx coil		
	21		Tx mixer to RF amp	
	22	RF amp input		
	23			Internal coupler to RF amp via RLB 2–3
	24	+28V, Rx coil		
	25	Drive circuit, Tx coil		
RLB	1		Band pass filters to int coupler	
	2	Internal coupler		
	3			Int coupler to RF amp via RLA 23–22
	4	+28V, Tx coil		
	5	Drive circuit, Rx coil		
	21		Earth for receiver line to RF amp	
	22	Earth		
	23			Not used
	24	+28V, Rx coil		
	25	Drive circuit, Tx coil		
RLC	1		+1.4V bias to PA	
	2	+1.4V regulated		
	3			Not used
	4	+28V, Tx coil		
	5	Drive circuit, Rx coil		
	21		+10V to PA	
	22	+10V regulated		
	23			Not used
	24	+28V, Rx coil		
	25	Drive circuit, Tx coil		
RLD	1		+10V transmit	
	2	+10V regulated		
	3			+10V receive
	4	+28V, Tx coil		
	5	Drive circuit, Rx coil		
	21		Synth output to Tx mixer	
	22	Synth output		
	23			Synth output to Rx mixer
	24	+28V, Rx coil		
	25	Drive circuit, Tx coil		

Mode Switch (Fig 1006)

225. The Mode Switch assembly is a plug-in unit situated on the main chassis and operated from the front panel through a detachable coupling. On the mode switch assembly are mounted the three filters used in the receiver IF and a printed circuit board containing 8 resistors used for bias level and ALC threshold setting in the power amplifier. The functions of the mode switch are set out in para 5. The inter-connections between the mode switch and the remainder of the RT unit circuitry are shown in the PRC-F1 Block Schematic (Fig 1002).

Power Switch (Fig 1002)

226. This switch is mounted on the front panel, and its various functions are set out in para 6 and 7. The interconnections between the Power Switch and the remainder of the RT unit are shown in the PRC-F1 Block Schematic (Fig 1002).

ACCESSORIES

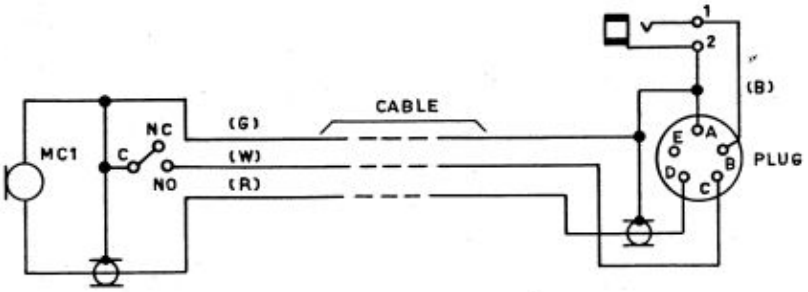

FIG 40 - MICROPHONE DYNAMIC, LIGHTWEIGHT

Microphone

227. The microphone supplied with the RT unit is of lightweight construction, with a dynamic insert and a microswitch which is operated by a pressel at the side of the polycarbonate case. It is fitted with a 6 ft coiled cable and 5-pin connector with an adaptor for the earpiece plug. The front of the case is fitted with a metal pocket clip. The microswitch is held in position by two spigots protruding from the bottom of the case. The colour-coded wiring is shown in Fig 40.

Earpiece

228. The earpiece is a lightweight plastic encapsulated transducer which is held to the ear of the user by a sleeved metal clip or, alternatively, by an earplug which replaces the clip. The coiled lead is fitted at one end with a jack plug for connection to the adaptor on the microphone connector. At the other end is a 2-pin polarised plug which fits into a socket on the earpiece.

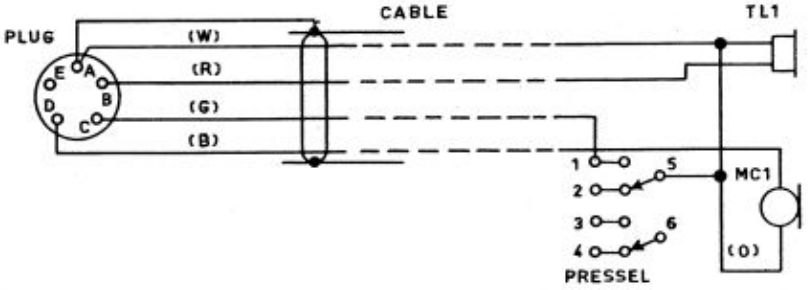

FIG 41 - HANDSET

Handset

229. The lightweight handset is of the conventional type, with a dynamic microphone insert. It has a pressel switch on the handle and is fitted with a cable and 5-pin connector. The colour-coded wiring is shown in Fig 41.

Telegraph Key

230. The telegraph key supplied with the RT unit is the lightweight (AUST) No. 1, Mk 2. The key travel is set to 0.013 in; the pressure to 10 oz.

Battery

231. The nickel-cadium battery used with the RT unit is specially manufactured for the purpose. It comprises 22 cells in series and gives, after having been fully charged, 28V under full load. The battery provides approximately 6 hours operation on high power or 24 hours on low power, assuming a ratio of 10 to 1 for receive to transmit. The battery must be charged with the Regulator, Battery Charger, F1 as supplied with the equipment, since this regulator is designed to give the correct charging rates. For a detailed description of the electro-chemical properties of nickel-cadium batteries, reference should be made to the relevant EMEI. Instructions for the maintenance of the battery as used in the RT unit are contained in the User Handbook, Regulator Set, MX-F1.

Antennas

232. A description of the antennas supplied with the RT unit, including their purpose and installation, is contained in the User Handbook, Radio Set PRC-F1.

The next page is 1001

TABLE 1001 - COMPONENT SCHEDULE - RF AMPLIFIER

Prefix 1, Fig 1004

TUNER 1 - Circuit Board 1-1CB1 - Prefix 1-1

Circuit Reference	Value	Rating	Type & Limit	Circuit Reference	Value	Rating	Type & Limit
RESISTORS							
R1,R8,R9	68 k ohm	1/4W	±5%, metal glaze	R13	220 ohm	1/4W	±5%, metal glaze
R2,R10	27 k ohm	"	" " "	R14	51 ohm	"	" " "
R4,R12	2.7 k ohm	"	" " "	R3,R6,R7, R11			Not used
R5	10 k ohm	"	" " "				
CAPACITORS							
C1	0.0047 uF	25V	±20%, ceramic	C8,C22,C41	73 pF	100V	±1%, plastic film
C2,C16,C35	93 pF	100V	±1%, plastic film	C11,C25,C44	67 pF	"	" " "
C3,C6,C9, C12,C17,C20, C23,C26,C36, C39,C42,C45	3.5-13 pF	-	Trimmer	C14,C28,C31, C32,C34	0.01 uF	25V	±20%, ceramic
				C15,C33	0.001 uF	500V	±20%, ceramic
C4,C7,C10 C13,C18,C21, C24,C27,C37, C40,C43,C46	75 pF	100V	±2%, plastic film	C29	3.3 pF	500V	±0.25 pF ceramic
				C47	0.047 uF	25V	±20%, ceramic
C5,C19,C38	82 pF	100V	±1%, plastic film	C30			Not used
INDUCTORS AND TRANSFORMERS							
L1		Inductor, ferrite core, fixed		TR1 through TR13		Transformer, ferrite core, adjustable	
DIODES AND TRANSISTORS							
MR1,MR2			1N660	VT1 through VT4			2N918
MISCELLANEOUS							
TJA,TJB,TJC		Connector, test					

TUNER 2 - Circuit Board 1-2CB1 - Prefix 1-2
TUNER 3 - Circuit Board 1-3CB1 - Prefix 1-3
TUNER 4 - Circuit Board 1-4CB1 - Prefix 1-4

CAPACITORS

C1	1004 pF	50V	±1%, plastic film	C9	56 pF	100V	±2%, plastic film
C2,C5,C8, C11,C14,C17	3.5-13 pF	-	Trimmer	C10	163 pF	100V	±1%, plastic film
C3	39 pF	100V	±2%, plastic film	C12	62 pF	100V	±2%, plastic film
C4	353 pF	"	" "	C13	130 pF	100V	±1%, plastic film
C6	47 pF	"	" "	C15,C18	68 pF	100V	±2%, plastic film
C7	221 pF	100V	±1%, plastic film	C16	109 pF	100V	±1%, plastic film

TRANSFORMERS

TR1 through TR6		Transformer, ferrite core, adjustable				

MIXER-AMPLIFIER - Circuit Board 1-5CB1 - Prefix 1-5

RESISTORS

R1,R2,R6	10 k ohm	1/4W	±5%, metal glaze	R5	18 k ohm	1/4W	±5%, metal glaze
R3	820 ohm	"	" " "	R7	2.7 k ohm	"	" " "
R4	33 k ohm	"	" " "	R8	51 ohm	"	" " "

CAPACITORS

C1,C2,C3, C4,C5,C7, C8	0.01 uF	25V	±20%, ceramic	C6	160 pF	100V	±1%, plastic film

MISCELLANEOUS

TJD,TJE, TJF		Connector, test	VT1,VT2		Transistor, 2N915
TR1		Transformer, ferrite core, adjustable			

DECOUPLER - Circuit Board 1-6CB1 - Prefix 1-6

RESISTORS

R1,R2,R3	100 ohm	1/4W	±5%, metal glaze	R9	15 k ohm	1/4W	±5%, metal glaze
R4,R5	12 k ohm	"	" " "	R10	82 k ohm	"	" " "
R6,R7	330 k ohm	"	" " "	R11	330 ohm	"	" " "
R8	10 k ohm	"	" " "				

CAPACITORS

C1,C2,C3	0.047 uF	25V	±20%, ceramic	C7	0.01 uF	25V	±20%, ceramic
C4,C5,C6							

MISCELLANEOUS

MR1,MR2		Diode, 1N914	VT1		Transistor, 2N2484
TJKK		Connector, test	VT2		" 2N2907A

CHASSIS - Prefix 1-7

			CAPACITORS				
C1-A. C1-B, C1-C	215 pF max		Variable, 3-gang, tuning	C3,C5,C7 C8,C9	3.3 pF	500V	±0.25 pF, ceramic NPO
C2,C4,C6	18 pF	500V	±5%, ceramic, N2200				
			INDUCTORS				
L1 through L10			ferrite core, fixed				
			MISCELLANEOUS				
PLD,PLE		Connector, 5-way plus 2 coaxial		SWA		Switch, rotary, 9 wafers	
R1	47 k ohm	1/4W	±5%, metal glaze				

TABLE 1002 - COMPONENT SCHEDULE - MODE SWITCH
Prefix 2, Fig 1006

CIRCUIT BOARD 2CB1 - Prefix 2

Circuit Reference	Value	Rating	Type & Limit	Circuit Reference	Value	Rating	Type & Limit
			RESISTORS				
R1,R2	3.3 k ohm	1/4W	±2%, metal glaze	R6	1.8 k ohm	1/4W	±2%, metal glaze
R3	3.9 k ohm	"	" " "	R7	22 k ohm	"	" " "
R4	2.7 k ohm	"	" " "	R8	100 k ohm	"	" " "
R5	10 k ohm	"	" " "				

CHASSIS - Prefix 2

			CAPACITORS				
C1,C2,C3 C4	120 pF	25V	±2%, plastic film				
			MISCELLANEOUS				
Q1		Filter, mechanical, 497-499.7 kHz		PLB		Connector, 15-way	
Q2		Filter, mechanical 500 ±3 kHz		PLC		Connector, 5-way plus 2 coaxial	
Q3		Filter, crystal, 498 kHz		SWA		Switch, rotary 6 wafers	

TABLE 1003 - COMPONENT SCHEDULE - RECEIVER IF, AGC & BFO BOARD

Prefix 3, Fig 34, 35

Circuit Reference	Value	Rating	Type & Limit	Circuit Reference	Value	Rating	Type & Limit
RESISTORS							
R1,R7,R11 R14,R15,R21	390 ohm	1/4W	±5%, metal glaze	R25	33 k ohm	1/4W	±5%, metal glaze
R2,R8	68 k ohm	"	" " "	R26,R29,R51	10 k ohm	"	" " "
R3,R9,R35	22 k ohm	"	" " "	R27	330 k ohm	"	" " "
R4,R10,R43, R44	12 k ohm	"	" " "	R28,R42	18 k ohm	"	" " "
R5,R12,R37	3.3 k ohm	"	" " "	R30,R53,R56	150 k ohm	"	" " "
R6,R13	2.2 k ohm	"	" " "	R34	39 k ohm	"	" " "
R16,R32,R33	100 ohm	"	" " "	R36,R46,R52	6.8 k ohm	"	" " "
R17,R31	4.7 k ohm	"	" " "	R38	1 k ohm	"	" " "
R18	3.9 k ohm	"	" " "	R39	680 ohm	"	" " "
R19	470 ohm	"	" " "	R41	15 k ohm	"	" " "
R20,R47,R50	560 ohm	"	" " "	R48	8.2 k ohm	"	" " "
R22	330 ohm	"	" " "	R49	1.5 k ohm	"	" " "
R23,R40	2.7 k ohm	"	" " "	R55	100 k ohm	"	" " "
				R24,R45,R54			Not Used
CAPACITORS							
C1,C2,C5, C6,C9,C10, C11,C12,C13, C14,C16,C22, C23,C25,C26, C27,C30,C31, C34	0.047 uF	25V	±20%, ceramic	C21	10 uF	20V	±10%, electr, tantalum
				C33	150 pF	100V	±2%, plastic film
				C35	100 pF	100V	±2%, plastic film
C3,C7,C18 C19,C20,C28, C29	0.001 uF	500V	±20%, ceramic	C17			Not used
C4,C8,C15, C24,C32	330 pF	100V	±2%, plastic film				
INDUCTORS AND TRANSFORMERS							
L1		Inductor, ferrite core, adjustable		TR1,TR2, TR3,TR4		Transformer, ferrite core, adjustable	
DIODES AND TRANSISTORS							
MR2,MR3, MR4,MR5		1N660		VT1,VT3,VT5, VT6,VT7,VT8 VT10,VT11, VT12			2N915
MR6,MR7		Varactor, BA102					
MR1		Not used		VT2,VT4,VT13			2N914
				VT9			2N2484
MISCELLANEOUS							
PLL,PLM		Connector, 6-way		TJQ-TJR		Connector, test, 2-way	

TABLE 1004 - COMPONENT SCHEDULE - SIDETONE AND AUDIO BOARD

Prefix 4, Fig 36

Circuit Reference	Value	Rating	Type & Limit	Circuit Reference	Value	Rating	Type & Limit
RESISTORS							
R1,R3,R6, R11	3.3 k ohm	1/4W	±5%, metal glaze	R14,R21,R27	10 k ohm	1/4W	±5%, metal glaze
R2	5.6 k ohm	"	" " "	R15,R19	330 k ohm	"	" " "
R4	2.2 k ohm	"	" " "	R16	120 ohm	"	" " "
R5	150 ohm	"	" " "	R17,R20,R30	1 M ohm	"	" " "
R7,R8	18 k ohm	"	" " "	R22	100 ohm	"	" " "
R9,R18,R25	150 k ohm	"	" " "	R24	100 k ohm	"	" " "
R10	120 k ohm	"	" " "	R26	56 ohm	"	" " "
R12,R23	15 k ohm	"	" " "	R28	12 k ohm	"	" " "
R13	27 k ohm	"	" " "	R29	560 ohm	"	" " "
CAPACITORS							
C1,C19	3.3 uF	15V	±10%, electr, tantalum	C13	0.0047 uF	25V	±20%, ceramic
C2,C5,C18	0.01 uF	25V	±20%, ceramic	C14	68 uF	15V	±10%, electr, tantalum
C4,C6,C16	1 uF	50V	±10%, electr, tantalum	C15,C20,C21	47 uF	6V	±10%, electr, tantalum
C7,C8	0.0027 uF	50V	±2%, plastic film	C17	0.01 uF	100V	−20+80%, ceramic
C9,C10,C11, C12	0.047 uF	25V	±20%, ceramic	C3			Not used
DIODES AND TRANSISTORS							
MR1,MR2			OA202	VT2			2N2907
VT1,VT3,VT4, VT5,VT7			2N914	VT6,VT8,VT9, VT10,VT11			2N2484
MISCELLANEOUS							
PLJ,PLK		Connector, 6-way		TJN-TJP		Connector, test, 2-way	
TJG,TJH,TJJ, TJK,TJL,TJM		Connector, test		TR1		Transformer, iron core, encapsulated	

TABLE 1005 - COMPONENT SCHEDULE - COMPRESSION AMPLIFIER AND RELAY DRIVE

Prefix 5, Fig 22, 23

Circuit Reference	Value	Rating	Type & Limit	Circuit Reference	Value	Rating	Type & Limit
RESISTORS							
R1,R3,R16	2.2 k ohm	1/4W	±5%, metal glaze	R13	39 k ohm	1/4W	±5%, metal glaze
R2	5.6 k ohm	"	" " "	R14,R22,R36	100 ohm	"	" " "
R4,R25,R33	8.2 k ohm	"	" " "	R15	2.7 k ohm	"	" " "
R5,R26,R28, R31	56 k ohm	"	" " "	R18	10 k ohm	"	" " "
R6	18 k ohm	"	" " "	R19	3.3 k ohm	"	" " "
R7	1 k ohm	"	" " "	R20	470 ohm	"	" " "
R8	15 k ohm	"	" " "	R24,R27,R34	1 M ohm	"	" " "
R9,R17,R30	68 k ohm	"	" " "	R29	33 k ohm	"	" " "
R10,R12	4.7 k ohm	"	" " "	R32	1.8 k ohm	"	" " "
R11,R21,R23, R35	150 k ohm	"	" " "				
CAPACITORS							
C1	0.0047 uF	25V	±20%, ceramic	C7	10 uF	20V	±10%, electr, tantalum
C2,C13	68 uF	15V	±10%, electr, tantalum	C12,C14	3.3 uF	15V	±10%, electr, tantalum
C3,C4,C8, C9,C10,C11	0.047 uF	25V	±20%, ceramic	C16,C20	0.033 uF	250V	±10%, polyester
C5,C15,C17, C18	0.01 uF	25V	±20%, ceramic	C19	100 uF	10V	±10%, electr, tantalum
C6	47 uF	6V	±10%, electr, tantalum				
DIODES AND TRANSISTORS							
MR1,MR2, MR3,MR4			1N660	VT1,VT2,VT3, VT4,VT6,VT9			2N2484
MR5,MR6, MR7,MR8			0A202	VT5,VT10			2N1893
				VT7,VT8			2N914
MISCELLANEOUS							
PLR,PLS		Connector, 6-way		TJV-TJW		Connector, test, 2-way	
TJU		Connector, test		VDR1,VDR2		Voltage-dependent resistor	

TABLE 1006 - COMPONENT SCHEDULE - MODULATOR BOARD

Prefix 6, Fig 24

Circuit Reference	Value	Rating	Type & Limit	Circuit Reference	Value	Rating	Type & Limit
RESISTORS							
R1,R2	1.2 k ohm	1/4W	±5%, metal glaze	R16	2.2 k ohm	1/4W	±5%, metal glaze
R3,R13,R25	390 ohm	"	" " "	R17	1.5 k ohm	"	" " "
R4	22 k ohm	"	" " "	R18	15 k ohm	"	" " "
R5	5.6 k ohm	"	" " "	R19,R20	33 k ohm	"	" " "
R6	150 ohm	"	" " "	R22	180 ohm	"	" " "
R7,R15	680 ohm	"	" " "	R23	3.9 k ohm	"	" " "
R8,R9,R27	68 ohm	"	" " "	R24	6.8 k ohm	"	" " "
R10,R11	560 ohm	"	" " "	R26	27 k ohm	"	" " "
R12	12 k ohm	"	" " "	RV1	100 ohm	1/4W	±5%, variable
R14,R21	18 k ohm	"	" " "				
CAPACITORS							
C1,C2,C3 C6,C14,C15, C16,C18,C19	0.047 uF	25V	±20%, ceramic	C11,C12	220 pF	100V	±2%, plastic film
C4	22 pF	500V	±20%, ceramic	C13	3.3 uF	15V	±10%, electr, tantalum
C5	2700 pF	50V	±2%, plastic film	C17	120 pF	100V	±2%, plastic film
C7,C23	0.01 uF	25V	±20%, ceramic	C20	150 pF	100V	±2%, plastic film
C8	0.001 uF	500V	±20%, ceramic	C21	12 pF	500V	±5%, ceramic
C9,C22	3-13 pF		Trimmer				
C10	6.8 pF	500V	±0.5 pF, cer				
INDUCTORS AND TRANSFORMERS							
L1,L2		Inductor, ferrite core, adjustable		TR1		Transformer, toroidal, ferrite core	
DIODES AND TRANSISTORS							
MR1,MR2,MR3, MR4,MR8,MR9 MR10,MR11			FA4000	MR6,MR7			1N660
				VT1,VT2			2N915
MR5			OA202				
MISCELLANEOUS							
PLG,PLH		Connector, 6-way		Q1		Filter, mechanical, 497 - 499.7 kHz	

TABLE 1007 - COMPONENT SCHEDULE - POWER AMPLIFIER PART A, ALC,

1.4V REGULATOR AND BANDPASS FILTERS

Prefix 7, Fig 26, 27, 39

RF DRIVER AND ALC - Circuit Board 7-1CB1 - Prefix 7-1, Fig 26

Circuit Reference	Value	Rating	Type & Limit	Circuit Reference	Value	Rating	Type & Limit
RESISTORS							
R1,R30	3.3 k ohm	1/4W	±5%, metal glaze	R16	2.7 k ohm	1/4W	±5%, metal glaze
R2	6.8 k ohm	"	" " "	R17	39 k ohm	"	" " "
R3	82 ohm	"	" " "	R18,R25	27 k ohm	"	" " "
R4	1.2 k ohm	"	" " "	R19	15 k ohm	"	" " "
R5	100 ohm	"	" " "	R20	2.2 k ohm	"	" " "
R6,R7	39 ohm	1/4W	±5%, composition	R21	0.75 ohm	2W	±2%, wire-wound
R8,R23	1 k ohm	1/4W	±5%, metal glaze	R22,R28	1M ohm	1/4W	±5%, composition
R9,R29	270 ohm	"	" " "	R24	10 k ohm	1/4W	±5%, metal glaze
R10,R11, R14,R15	10 ohm	1/4W	±5%, composition	R26	1 k ohm	"	" " "
				R27	3.9 k ohm	"	" " "
R12,R13	22 ohm	"	" " "	R31	4.7 k ohm	"	" " "
CAPACITORS							
C1,C4,C5	0.01 uF	25V	±20%, ceramic	C9	1.0 uF	20V	±10%, electr, tantalum
C2	0.047 uF	25V	±20%, ceramic	C10	6.8 uF	6V	±10%, electr, tantalum
C3	560 pF	100V	±2%, plastic film	C11	47 uF	6V	±10%, electr, tantalum
C6,C7,C8	0.1 uF	50V	GMV, ceramic				
DIODES AND TRANSISTORS							
MR1,MR3			0A202	VT4,VT8,VT10			2N915
MR2			Not used	VT5			2N3726
VT1			2N918	VT6,VT9			2N2484
VT2,VT3			2N3295	VT7			2N2907
MISCELLANEOUS							
PLAA		Connector, 9-way		TR1		Transformer, ferrite core, fixed	
PLF		Connector, 10-way plus 1 coaxial					

1.4V REGULATOR - Circuit Board 7-2CB1 - Prefix 7-2, Fig 39

RESISTORS							
R1	68 k ohm	1/4W	±5%, metal glaze	R7	6.8 k ohm	1/4W	±5%, metal glaze
R2	12 k ohm	"	" " "	R9,R10	390 ohm	"	" " "
R3	15 k ohm	"	" " "	R11	470 ohm	"	" " "
R4	1 k ohm	"	" " "	RT1	470 ohm	-	±10%, thermistor
R5,R8	100 k ohm	"	" " "	RV1	500 ohm	1/4W	±5%, variable
R6	3.9 k ohm	"	" " "				
CAPACITORS							
C1	0.01 uF	100V	−20+80%, cer	C5	47 uF	6V	±10%, electr, tantalum
C2	47 uF	50V	±10%, electr, tantalum	C6	150 uF	6V	±10%, electr, tantalum
C3	18 pF	500V	±5%, ceramic				
C4	1 uF	50V	±10%, electr, tantalum				
INDUCTORS							
L1		ferrite core, fixed		L2,L3		ferrite pot core, fixed	
DIODES AND TRANSISTORS							
MR1			1N660	VT1,VT2			2N2907A
MR2			1N3298	VT3			2N2907
MR3			0A202	VT4,VT5			2N915

FILTER, BANDPASS, 2-3 MHz - Circuit Board 7-3CB1 - Prefix 7-3, Fig 27

RESISTORS							
R1	82 ohm	1/4W	±5%, metal glaze				
CAPACITORS							
C1,C4, C6,C7	1000 pF	500V	±1%, silver mica	C5	430 pF	500V	±1%, silver mica
C2	200 pF	"	" " "	C8	750 pF	"	" " "
C3	390 pF	"	" " "	C9	820 pF	"	" " "
INDUCTORS & TRANSFORMERS							
L1,L2,L3		Inductor, ferrite core, adjustable		TR1,TR2, TR3		Transformer, ferrite core, adjustable	

FILTER, BANDPASS, 3-4 MHz - Circuit Board 7-4CB1 - Prefix 7-4, Fig 27

RESISTOR

R1	82 ohm	1/4W	±5%, metal glaze				
CAPACITORS							
C1	820 pF	500V	±1%, silver mica	C8	510 pF	500V	±1%, silver mica
C3	300 pF	"	" " "	C9	560 pF	"	" " "
C4	1000 pF	"	" " "	C2,C5			Not used
C6,C7	750 pF	"	" " "				
INDUCTORS AND TRANSFORMERS							
L1,L2,L3		Inductor, ferrite core, adjustable		TR1,TR2, TR3		Transformer, ferrite core, adjustable	

FILTER, BANDPASS, 4-6 MHz - Circuit Board 7-5CB1 - Prefix 7-5, Fig 27

RESISTOR

R1	82 ohm	1/4W	±5%, metal glaze				
CAPACITORS							
C1	620 pF	500V	±1%, silver mica	C7	82 pF	500V	±1%, silver mica
C3	200 pF	"	" " "	C8	360 pF	"	" " "
C4	680 pF	"	" " "	C9	390 pF	"	" " "
C6	1000 pF	"	" " "	C2,C5			Not used
INDUCTORS AND TRANSFORMERS							
L1,L2,L3		Inductor, ferrite core, adjustable		TR1,TR2, TR3		Transformer, ferrite core, adjustable	

FILTER, BANDPASS, 6-8 MHz - Circuit Board 7-6CB1 - Prefix 7-6, Fig 27

RESISTOR

R1	82 ohm	1/4W	±5%, metal glaze				
CAPACITORS							
C1	430 pF	500V	±1%, silver mica	C8	250 pF	500V	±1%, silver mica
C3	150 pF	"	" " "	C9	300 pF	"	" " "
C4	510 pF	"	" " "	C2,C5,C7			Not used
C6	750 pF	"	" " "				
INDUCTORS AND TRANSFORMERS							
L1,L2,L3		Inductor, ferrite core, adjustable		TR1,TR2, TR3		Transformer, ferrite core, adjustable	

FILTER, BANDPASS, 8-12 MHz - Circuit Board 7-7CB1 - Prefix 7-7, Fig 27

RESISTOR							
R1	82 ohm	1/4W	±5%, metal glaze				
CAPACITORS							
C1	300 pF	500V	±1%, silver mica	C8	180 pF	500V	±1%, silver mica
C3	100 pF	"	" " "	C9	200 pF	"	" " "
C4	360 pF	"	" " "	C2,C5,C7			Not used
C6	560 pF	"	" " "				
INDUCTORS AND TRANSFORMERS							
L1,L2,L3		Inductor, ferrite core, adjustable		TR1,TR2, TR3		Transformer, ferrite core, adjustable	

TABLE 1008 - COMPONENT SCHEDULE - 100 kHz PULSE GENERATOR

Prefix 8, Fig 8

Circuit Reference	Value	Rating	Type & Limit	Circuit Reference	Value	Rating	Type & Limit
RESISTORS							
R1,R5,R9, R12,R22,R34	33 k ohm	1/4W	±2%, metal glaze	R18	8.2 k ohm	1/4W	±2%, metal glaze
R2,R6,R10, R13,R23	18 k ohm	"	" " "	R19	5.6 k ohm	"	" " "
R3,R4,R7, R16	4.7 k ohm	"	" " "	R20	1.5 k ohm	"	" " "
R8	3.9 k ohm	"	" " "	R21	56 k ohm	"	" " "
R11	3.3 k ohm	"	" " "	R24,R33	2.2 k ohm	"	" " "
R14	1 k ohm	"	" " "	R25	27 ohm	1/4W	±5%, composition
R15	220 ohm	"	" " "	R26,R30	51 ohm	1/4W	±2%, metal glaze
R17	15 k ohm	"	" " "	R27,R28, R31,R32	100 ohm	"	" " "
				R29	1.5 k ohm	"	" " "
CAPACITORS							
C1,C15,C21	3.3 uF	15V	±10%, electr, tantalum	C9	470 pF	100V	±2%, plastic film
C2	270 pF	100V	±2%, plastic film	C12	4700 pF	50V	±2%, plastic film
C3	82 pF	100V	±2%, plastic film	C13	1500 pF	50V	±2%, plastic film.
C4,C7, C11,C16	0.01 uF	25V	±20%, ceramic	C14	510 pF	100V	±2%, plastic film
C5	0.001 uF	50V	±2%, plastic film	C20	82 pF	100V	±2%, plastic film
C6	330 pF	100V	±2%, plastic film	C24	10 uF	20V	±10%, electr, tantalum
C8,C10,C17, C18,C19,C23	0.047 uF	25V	±20%, ceramic	C22			Not used

INDUCTORS AND TRANSFORMERS							
L1,L2		Inductor, ferrite core, adjustable		TR1,TR2, TR3,TR4		Transformer, ferrite core, adjustable	
DIODES AND TRANSISTORS							
MR1,MR2, MR3,MR4		1N914		VT1,VT2,VT3 VT4,VT5,VT6		2N915	
				VT7,VT8		2N914	
MISCELLANEOUS							
PLN,PLO		Connector, 6-way					

TABLE 1009 - COMPONENT SCHEDULE - 10 kHz PULSE GENERATOR

Prefix 9, Fig 9

Circuit Reference	Value	Rating	Type & Limit	Circuit Reference	Value	Rating	Type & Limit
RESISTORS							
R1	33 k ohm	1/4W	±5%, metal glaze	R10	180 k ohm	1/4W	±2%, metal glaze
R2	18 k ohm	"	" " "	R11	82 ohm	"	" " "
R3,R9	1.8 k ohm	1/4W	±2%, metal glaze	R12,R18	51 ohm	1/4W	±5%, metal glaze
R4	470 ohm	1/4W	±5%, metal glaze	R13,R15, R16,R17	100 ohm	"	" " "
R5,R8	4.7 k ohm	1/4W	±2%, metal glaze	R14	39 k ohm	"	" " "
R6,R19	12 k ohm	"	" " "				
R7	2.2 k ohm	"	" " "				
CAPACITORS							
C1	0.01 uF	25V	±20%, ceramic	C5	0.001 uF	50V	±2%, plastic film
C2,C7,C9	0.047 uF	25V	±20%, ceramic	C6,C10	10 uF	20V	±10%, electr, tantalum
C3	0.039 uF	50V	±2%, plastic film	C8	2700 pF	50V	±2%, plastic film
C4	0.01 uF	50V	±2%, plastic film				
INDUCTORS AND TRANSFORMERS							
L1		Inductor, ferrite core, adjustable		TR1,TR2		Transformer, ferrite core, adjustable	
DIODES AND TRANSISTORS							
MR1,MR2			1N914	VT1,VT2			2N915
				VT3,VT4			2N914
MISCELLANEOUS							
PLP		Connector, 6-way					

TABLE 1010 - COMPONENT SCHEDULE - FREQUENCY SYNTHESISER

Prefix 10, Fig 10 through 21

100 kHz INPUT FILTER - Prefix 10-1, Fig 10 - Sealed Unit

FIRST MIXER - Circuit Board 10-2CB1 - Prefix 10-2, Fig 10

Circuit Reference	Value	Rating	Type & Limit	Circuit Reference	Value	Rating	Type & Limit
RESISTORS							
R1,R5	51 ohm	1/4W	±5%, metal glaze	R4,R7	4.7 k ohm	1/4W	±5%, metal glaze
R2	33 k ohm	"	" " "	R6	100 ohm	"	" " "
R3	18 k ohm	"	" " "				
CAPACITORS							
C1,C2,C3	1000 pF	500V	±20%, ceramic				
TRANSISTOR							
VT1			2N918				

FILTER, BANDPASS, 57,850 - 56,951 kHz - Prefix 10-3, Fig 12 - Sealed Unit

SECOND MIXER - Circuit Board 10-4CB1 - Prefix 10-4, Fig 12

RESISTORS							
R1	100 ohm	1/4W	±5%, metal glaze	R5	2.7 k ohm	1/4W	±5%, metal glaze
R2	33 k ohm	"	" " "	R6	220 ohm	"	" " "
R3	18 k ohm	"	" " "	R7	51 ohm	"	" " "
R4	4.7 k ohm	"	" " "				
CAPACITORS							
C1,C4	0.01 uF	25V	±20%, ceramic	C3	1000 pF	500V	±20%, ceramic
C2	100 pF	100V	±2%, plastic film				
TRANSFORMER							
TR1			Ferrite core, adjustable				
TRANSISTOR							
VT1			2N915				

FILTER, CRYSTAL, 10,650 kHz - Prefix 10-5, Fig 15 - Sealed Unit

THIRD MIXER - Circuit Board 10-6CB1 - Prefix 10-6, Fig 15

RESISTORS

R1	100 ohm	1/4W	±5%, metal glaze	R5	2.7 k ohm	1/4W	±5%, metal glaze
R2	33 k ohm	"	" " "	R6	180 ohm	"	" " "
R3	18 k ohm	"	" " "	R7	51 ohm	"	" " "
R4	4.7 k ohm	"	" " "				
CAPACITORS							
C1,C3,C6	0.01 uF	25V	±20%, ceramic	C4	110 pF	100V	±2%, plastic film
C2	100 pF	100V	±2%, plastic film	C5	0.047 uF	25V	±20%, ceramic
INDUCTORS AND TRANSFORMERS							
L1		Inductor, ferrite core, adjustable		TR1		Transformer, ferrite core, adjustable	
TRANSISTOR							
VT1			2N915				

FILTER, BANDPASS, 10,441 - 10,450 kHz - Prefix 10-7, Fig 16 - Sealed Unit

AMPLIFIER, 10,445 kHz - Circuit Board 10-8CB1 - Prefix 10-8, Fig 16

RESISTORS

R1,R4,R10	2.7 k ohm	1/4W	±5%, metal glaze	R7,R13,R18	100 ohm	1/4W	±5%, metal glaze
R2	33 k ohm	"	" " "	R8,R14	15 k ohm	"	" " "
R3	18 k ohm	"	" " "	R9,R15	8.2 k ohm	"	" " "
R5	33 ohm	"	" " "	R11,R16	51 ohm	"	" " "
R6	3.3 k ohm	"	" " "	R12,R17	1.8 k ohm	"	" " "
CAPACITORS							
C1	100 pF	100V	±2%, plastic film	C4,C8,C12	120 pF	100V	±2%, plastic film
C2,C3,C5, C6,C7,C9, C10,C11,C13	0.01 uF	25V	±20%, ceramic				
INDUCTORS AND TRANSFORMERS							
L1,L2		Inductor, ferrite core, adjustable		TR1,TR2		Transformer, ferrite core, adjustable	
TRANSISTORS							
VT1			2N918	VT2,VT3			2N915

FILTER, BANDPASS, 2,010 - 2,100 kHz - Prefix 10-9, Fig 18 - Sealed Unit

FOURTH MIXER - Circuit Board 10-10CB1 - Prefix 10-10, Fig 18

RESISTORS							
R1,R8	100 ohm	1/4W	±5%, metal glaze	R5	2.7 k ohm	1/4W	±5%, metal glaze
R2	33 k ohm	"	" " "	R6	270 ohm	"	" " "
R3	18 k ohm	"	" " "	R7	51 ohm	"	" " "
R4	4.7 k ohm	"	" " "				
CAPACITORS							
C1,C3,C4, C5	0.01 uF	25V	±20%, ceramic	C2	100 pF	100V	±2%, plastic film
MISCELLANEOUS							
TR1		Transformer, ferrite core, adjustable		VT1		Transistor, 2N915	

FILTER, CRYSTAL, 10,705 kHz - Prefix 10-11, Fig 18 - Sealed Unit

MODULE, CHANNEL CENTERING - Circuit Board 10-12CB1 - Prefix 10-12, Fig 18

RESISTORS							
R1,R11,R17	4.7 k ohm	1/4W	±5%, metal glaze	R7,R14	51 ohm	1/4W	±5%, metal glaze
R2,R18	22 k ohm	"	" " "	R8	33 k ohm	"	" " "
R3,R16	12 k ohm	"	" " "	R9	18 k ohm	"	" " "
R4,R15	1 k ohm	"	" " "	R10,R12	10 k ohm	"	" " "
R5	100 ohm	"	" " "	R13	390 ohm	"	" " "
R6	150 ohm	"	" " "				
CAPACITORS							
C1,C16	18 pF	500V	±0.5 pF, ceramic	C7,C18	0.01 uF	25V	±20%, ceramic
C2,C17	4.5-20 pF		Trimmer	C8,C9	100 pF	100V	±2%, plastic film
C3,C15	300 pF	100V	±2%, plastic film	C11,C12	0.047 uF	25V	±20%, ceramic
C4,C5,C6, C10,C13,C14	3.3 uF	15V	±10%, electr, tantalum				
TRANSFORMERS							
TR1,TR2 TR3			Ferrite core, adjustable				
TRANSISTORS							
VT1,VT3,VT5			2N915	VT2,VT4			2N914
MISCELLANEOUS							
XL1		Crystal, 200 kHz		XL2		Crystal, 202 kHz	

FILTER, CRYSTAL, 10,906 kHz - Prefix 10-13, Fig 19 - Sealed Unit

SIXTH MIXER - Circuit Board 10-14CB1 - Prefix 10-14, Fig 19

RESISTORS

R1	390 ohm	1/4W	±5%, metal glaze	R5	3.3 k ohm	1/4W	±5%, metal glaze
R2	33 k ohm	"	" " "	R6	51 ohm	"	" " "
R3	18 k ohm	"	" " "	R7,R8	100 ohm	"	" " "
R4	4.7 k ohm	"	" " "				
CAPACITORS							
C1,C2,C3, C5	0.01 uF	25V	±20%, ceramic	C4	22 pF	500V	±20%, ceramic
TRANSISTOR							
VT1			2N918				

FILTER, BANDPASS, 2,210 - 2,300 kHz - Prefix 10-15, Fig 19 - Sealed Unit

SEVENTH MIXER - Circuit Board 10-16CB1 - Prefix 10-16, Fig 19

RESISTORS

R1	56 ohm	1/4W	±5%, metal glaze	R5	51 ohm	1/4W	±5%, metal glaze
R2	33 k ohm	"	" " "	R6	100 ohm	"	" " "
R3	18 k ohm	"	" " "	R7,R8	12 k ohm	"	" " "
R4	4.7 k ohm	"	" " "				
CAPACITORS							
C1,C2,C4	0.01 uF	25V	±20%, ceramic	C5	2.7 pF	500V	±0.1 pF, ceramic
C3,C6	150 pF	100V	±2%, plastic film				
MISCELLANEOUS							
L1,L2		Inductor, ferrite core, adjustable		VT1		Transistor, 2N918	

AMPLIFIER, ALC, TUNED - Circuit Board 10-17CB1 - Prefix 10-17, Fig 20

RESISTORS

R1	33 k ohm	1/4W	±5%, metal glaze	R5	4.7 k ohm	1/4W	±5%, metal glaze
R2	18 k ohm	"	" " "	R6	1 k ohm	"	" " "
R3	100 k ohm	"	" " "	R7	100 ohm	"	" " "
R4	27 k ohm	"	" " "	R8,R9	12 k ohm	"	" " "
CAPACITORS							
C1,C2,C4	0.01 uF	25V	±20%, ceramic	C6	220 pF	100V	±2%, plastic film
C3	150 pF	100V	±2%, plastic film	C7	430 pF	100V	±2%, plastic film
C5	2.7 pF	500V	±0.1 pF, ceramic				
MISCELLANEOUS							
L1,L2		Inductor, ferrite core, adjustable		VT1		Transistor, 2N918	
				VT2		Transistor, 2N915	

EIGHTH MIXER - Circuit Board 10-18CB1 - Prefix 10-18, Fig 20

RESISTORS							
R1	33 k ohm	1/4W	±5%, metal glaze	R4	100 ohm	1/4W	±5%, metal glaze
R2	18 k ohm	"	" " "	R5	51 ohm	"	" " "
R3,R6	4.7 k ohm	"	" " "				
CAPACITORS							
C1	0.01 uF	25V	±20%, ceramic	C2	1000 pF	500V	±20%, ceramic
TRANSISTOR							
VT1			2N918				

FILTER, BANDPASS, 58,951 - 59,950 kHz - Prefix 10-19, Fig 20 - Sealed Unit

FINAL MIXER - Circuit Board 10-20CB1 - Prefix 10-20, Fig 21

RESISTORS							
R1	220 ohm	1/4W	±5%, metal glaze	R4	4.7 k ohm	1/4W	±5%, metal glaze
R2	33 k ohm	"	" " "	R5	100 ohm	"	" " "
R3	18 k ohm	"	" " "	R6	51 ohm	"	" " "
CAPACITORS							
C1,C2,C3	0.01 uF	25V	±20%, ceramic				
TRANSISTOR							
VT1			2N918				

FILTER, LOW PASS, FINAL, 2,500 - 12,500 kHz - Prefix 10-21, Fig 21 - Sealed Unit

AMPLIFIER-DETECTOR - Circuit Board 10-22CB1 - Prefix 10-22, Fig 21

RESISTORS							
R1	470 ohm	1/4W	±5%, metal glaze	R6	1.5 k ohm	1/4W	±5%, metal glaze
R2,R4	6.8 k ohm	"	" " "	R7	100 ohm	"	" " "
R3	5.6 k ohm	"	" " "	R8	15 k ohm	"	" " "
R5	39 ohm	"	" " "				
CAPACITORS							
C1,C2,C3, C4	0.047 uF	25V	±20%, ceramic	C6	1 uF	50V	±10%, electr, tantalum
C5	0.01 uF	"	" "				
DIODES AND TRANSISTORS							
MR1			1N660	VT1,VT2			2N918
TRANSFORMER							
TR1			Ferrite core, fixed				

FILTER, HIGH PASS, FINAL - Prefix 10-23, Fig 21 - Sealed Unit

FILTER, ALC DECOUPLING - Prefix 10-24, Fig 21 - Sealed Unit

OSCILLATOR, MHz SELECTION - Circuit Board 10-25CB1 - Prefix 10-25, Fig 11

RESISTORS							
R1	3.9 k ohm	1/4W	±5%, metal glaze	R3,R4	2.2 k ohm	1/4W	±5%, metal glaze
R2	4.7 k ohm	"	" " "	R5	100 ohm	"	" " "
CAPACITORS							
C1,C2	1000 pF	500V	±20%, ceramic	C5 through C14	3.5-13 pF		Trimmer
C3	68 pF	"	" " "				
C4	10 pF	"	" " "				
INDUCTORS							
L1,L2			Ferrite core, adjustable				
TRANSISTOR							
VT1			2N918				
MISCELLANEOUS							
SWA		Switch, rotary, 2 wafers		XL6		Crystal, 67,450 kHz	
XL1		Crystal, 62,450 kHz		XL7		" 68,450 kHz	
XL2		" 63,450 kHz		XL8		" 69,450 kHz	
XL3		" 64,450 kHz		XL9		" 70,450 kHz	
XL4		" 65,450 kHz		XL10		" 71,450 kHz	
XL5		" 66,450 kHz					

FIRST ISOLATING STAGE - Circuit Board 10-26CB1 - Prefix 10-26, Fig 11

RESISTORS							
R1,R3	6.8 k ohm	1/4W	±5%, metal glaze	R4	2.2 k ohm	1/4W	±5%, metal glaze
R2	5.6 k ohm	"	" " "	R5	100 ohm	"	" " "
CAPACITORS							
C1,C2,C3	1000 pF	500V	±20%, ceramic	C5	12 pF	500V	±0.5 pF, ceramic
C4	2 pF	500V	±0.1 pF, ceramic				
MISCELLANEOUS							
L1		Inductor, ferrite core, adjustable		VT1,VT2		Transistor, 2N915	

SECOND ISOLATING STAGE - Circuit Board 10-27CB1 - Prefix 10-27, Fig 11

RESISTORS							
R1	33 k ohm	1/4W	±5%, metal glaze	R3	4.7 k ohm	1/4W	±5%, metal glaze
R2	18 k ohm	"	" " "	R4	100 ohm	"	" " "
CAPACITORS							
C1,C2	1000 pF	500V	±20%, ceramic	C4	2 pF	500V	±0.1 pF, ceramic
C3	12 pF	500V	±0.5 pF, ceramic				
MISCELLANEOUS							
L1		Inductor, ferrite core, adjustable		VT1		Transistor, 2N915	

OSCILLATOR, 100 kHz SELECTION - Circuit Board 10-28CB1 - Prefix 10-28, Fig 13

RESISTORS							
R1	3.9 k ohm	1/4W	±5%, metal glaze	R3,R4	2.2 k ohm	1/4W	±5%, metal glaze
R2	4.7 k ohm	"	" " "	R5	100 ohm	"	" " "
CAPACITORS							
C1,C2	1000 pF	500V	±20%, ceramic	C5	22 pF	500V	±5%, ceramic
C3,C4	68 pF	500V	±5%, ceramic				
INDUCTOR							
L1		Inductor, ferrite core, adjustable					
TRANSISTOR							
VT1			2N918				
MISCELLANEOUS							
XL1		Crystal, 47,200 kHz		XL6		Crystal, 46,700 kHz	
XL2		"	47,100 kHz	XL7		"	46,600 kHz
XL3		"	47,000 kHz	XL8		"	46,500 kHz
XL4		"	46,900 kHz	XL9		"	46,400 kHz
XL5		"	46,800 kHz	XL10		"	46,300 kHz

FIRST ISOLATING STAGE - Circuit Board 10-29CB1 - Prefix 10-29, Fig 13

RESISTORS							
R1,R3	6.8 k ohm	1/4W	±5%, metal glaze	R4	3.9 k ohm	1/4W	±5%, metal glaze
R2	5.6 k ohm	"	" " "	R5	100 ohm	"	" " "
CAPACITORS							
C1,C2,C3	1000 pF	500V	±20%, ceramic	C5	18 pF	500V	±0.5 pF, ceramic
C4	3.3 pF	500V	±0.1 pF, ceramic				
MISCELLANEOUS							
L1		Inductor, ferrite core, adjustable		VT1,VT2		Transistor, 2N915	

SECOND ISOLATING STAGE - Circuit Board 10-30CB1 - Prefix 10-30, Fig 13

RESISTORS							
R1	33 k ohm	1/4W	±5%, metal glaze	R3	6.8 k ohm	1/4W	±5%, metal glaze
R2	18 k ohm	"	" " "	R4	100 ohm	"	" " "
CAPACITORS							
C1,C2	1000 pF	500V	±20%, ceramic	C4	3.3 pF	500V	±0.1 pF, ceramic
C3	18 pF	500V	±0.5 pF, ceramic				
MISCELLANEOUS							
L1		Inductor, ferrite core, adjustable		VT1		Transistor, 2N915	

OSCILLATOR, kHz SELECTION - Circuit Boards 10-31CB1 and 2 - refix 10-31, Fig 14

RESIS							
R1	4.7 k ohm	1/4W	±5%, metal glaze	R3	12 k ohm	1/4W	±5%, metal glaze
R2	22 k ohm	"	" " "	R4	1 k ohm	"	" " "
CAPACITORS							
C1,C2,C5, C6,C7,C8, C9,C10	15 pF	500V	±0.5 pF, ceramic	C11 through C20	4.5-20 pF		Trimmer
C3,C4	10 pF	500V	±0.5 pF, ceramic	C21,C23	3.3 uF	15V	±10%, electr, tantalum
				C22	300 pF	100V	±2%, plastic film
TRANSFORMER							
TR1			Ferrite core, fixed				
TRANSISTOR							
VT1			2N915				
MISCELLANEOUS							
SWA		Switch, rotary, 1 wafer		XL6		Crystal, 205 kHz	
XL1		Crystal, 200 kHz		XL7		" 206 kHz	
XL2		" 201 kHz		XL8		" 207 kHz	
XL3		" 202 kHz		XL9		" 208 kHz	
XL4		" 203 kHz		XL10		" 209 kHz	
XL5		" 204 kHz					

OSCILLATOR, 10 kHz SELECTION - Circuit Board 10-32CB1 - Prefix 10-32, Fig 17

RESISTORS							
R1	33 k ohm	1/4W	±5%, metal glaze	R3,R4	3.9 k ohm	1/4W	±5%, metal glaze
R2	22 k ohm	"	" " "	R5,R6	1 k ohm	"	" " "
CAPACITORS							
C1	0.01 uF	25V	±20%, ceramic	C4	42 pF	100V	±2%, plastic film
C2	47 pF	100V	±2%, plastic film	C5,C6	0.047 uF	25V	±20%, ceramic
C3	150 pF	100V	±2%, plastic film				
TRANSISTOR							
VT1			2N915				
MISCELLANEOUS							
SWA		Switch, rotary, 1 wafer		XL6		Crystal, 8655 kHz	
XL1		Crystal, 8605 kHz		XL7		" 8665 kHz	
XL2		" 8615 kHz		XL8		" 8675 kHz	
XL3		" 8625 kHz		XL9		" 8685 kHz	
XL4		" 8635 kHz		XL10		" 8695 kHz	
XL5		" 8645 kHz					

FIRST ISOLATING STAGE - Circuit Board 10-33CB1 - Prefix 10-33, Fig 17

RESISTORS							
R1	33 k ohm	1/4W	±5%, metal glaze	R3	4.7 k ohm	1/4W	±5%, metal glaze
R2	18 k ohm	"	" " "	R4,R5	100 ohm	"	" " "
CAPACITORS							
C1,C2,C5	0.01 uF	25V	±20%, ceramic	C4	10 pF	500V	±0.5 pF, ceramic
C3	100 pF	100V	±2%, plastic film				
MISCELLANEOUS							
TR1		Transformer, ferrite core, adjustable		VT1		Transistor, 2N915	

SECOND ISOLATING STAGE - Circuit Board 10-34CB1 - Prefix 10-34, Fig 17

RESISTORS							
R1	33 k ohm	1/4W	±5%, metal glaze	R3	4.7 k ohm	1/4W	±5%, metal glaze
R2	18 k ohm	"	" " "	R4,R5	100 ohm	"	" " "
CAPACITORS							
C1,C2,C5	0.01 uF	25V	±20%, ceramic	C4	10 pF	500V	±0.5 pF, ceramic
C3	100 pF	100V	±2%, plastic film				
MISCELLANEOUS							
TR1		Transformer, ferrite core, adjustable		VT1		Transistor, 2N915	

CHASSIS, SYNTHESISER - Prefix 10-35, Fig 1003

CAPACITORS							
C1 through C21	0.001 uF	2 kV	−20,+50%, ceramic lead thru				
MISCELLANEOUS							
SKW,SKX,SKY		Connector, coaxial, right angle		SKZ		Connector, 7-way	

TABLE 1011 - COMPONENT SCHEDULE - MAIN CHASSIS

Prefix 11, Fig 1002 and 1005

Circuit Reference	Value	Rating	Type & Limit	Circuit Reference	Value	Rating	Type & Limit
INDUCTORS							
L1 through L10		Inductor, air core, fixed					
MISCELLANEOUS							
PLT		Connector, 20-way		SKB,SKBB		Connector, 15-way	
PLU		" 15-way		SKC,SKD,SKE		" 5-way plus 2 coaxial	
PLV		" 9-way		SKF		Connector, 10-way plus 1 coaxial	
PLW,PLX,PLY		" coaxial					
PLZ		" 7-way		SKG through SKS		Connector, 6-way	
RLA,RLB, RLC,RLD		Relay, minature, latching, 2C contacts		SWA		Switch, rotary, 4 wafers	

TABLE 1012 - COMPONENT SCHEDULE - FRONT PANEL

Prefix 12, Fig 1005 and 1007

COMPONENTS ON FRONT PANEL - Prefix 12-1, Fig 1007

Circuit Reference	Value	Rating	Type & Limit	Circuit Reference	Value	Rating	Type & Limit
RESISTORS							
R1	18 k ohm	1/4W	±5%, metal glaze	RV2	25 k ohm	1/4W	±20%, variable lin law, carbon
RV1	25 k ohm	1/8W	±20%, variable, log law, carbon				
CAPACITORS							
C1 through C6	0.01 uF	25V	±20%, ceramic				
MISCELLANEOUS							
LP1		1.2V Pilot lamp		SKT		Connector, 20-way	
MR1		Diode, 1N4001		SKU		Connector, 15-way	
PLA		Shorting plug		SKV		Connector, 9-way	
SKA		Connector, 3-way		SWA		Switch, rotary, 1 wafer	
SKCC,SKDD		Connector, 5-way		SWB		Switch, rotary, 1 wafer	
SKEE		Connector, coaxial					

INTERNAL COUPLING CIRCUIT - Prefixes 12-2, 12-3 and 12-4, Fig 1005

Current Metering Assembly - Prefix 12-2

RESISTORS							
R1	470 ohm	1/4W	±5%, metal glaze	R4	6.8 k ohm	1/4W	±5%, metal glaze
R2	560 ohm	"	" " "	R5	12 k ohm	"	" " "
R3	5.6 k ohm	"	" " "				
CAPACITORS							
C1	10 uF	20V	±10%, electr, tantalum	C2	0.047 uF	25V	±20%, ceramic
MISCELLANEOUS							
MR1,MR2		Diode 1N914		TR1,TR2		Transformer, toroidal	

Aerial Match Switch - Prefix 12-3

MISCELLANEOUS					
SWA		Switch, rotary, 1 wafer	TR1		Transformer, toroidal

rial Tune Switch - Prefix 12-4

CAPACITORS							
C1,C7,C17, C18,C19,C20	330 pF	500V	±1%. mica	C6	240 pF	500V	±1%, mica
C2	30 pF	"	" "	C8	470 pF	"	" "
C3	68 pF	"	" "	C9,C11	680 pF	"	" "
C4	110 pF	"	" "	C10,C13,C14, C15,C16	300 pF	"	" "
C5	160 pF	"	" "	C12	2 x 1000 pF	"	" "
INDUCTORS							
L1 through L12		Inductor, air core, fixed					
MISCELLANEOUS							
SWA		Switch, rotary 2 wafers		SWB		Switch, rotary, 1 wafer	

TABLE 1013 - COMPONENT SCHEDULE - 10V REGULATOR AND BATTERY TEST CIRCUIT
Prefix 14, Fig 38

Circuit Reference	Value	Rating	Type & Limit	Circuit Reference	Value	Rating	Type & Limit
RESISTORS							
R1	0.68 ohm	1/4W	±2%, wire-wound	R10,R11	33 k ohm	1/4W	±5%, metal glaze
R2	150 k ohm	1/4W	±5%, metal glaze	R12	18 k ohm	"	" " "
R3	220 k ohm	1/4W	±5%, composition	R14	820 ohm	"	" " "
R4	15 k ohm	1/4W	±5%, metal glaze	R15	6.8 k ohm	"	" " "
R5	1.5 k ohm	"	" " "	R16	1 k ohm	"	" " "
R6	330 k ohm	1/4W	±5%, composition	R18	1.2 k ohm	"	" " "
R7,R9,R13, R17	12 k ohm	1/4W	±5%, metal glaze	R19	68 k ohm	"	" " "
R8	10 k ohm	"	" " "	RV1	10 k ohm	1/4W	±5%, variable
CAPACITORS							
C1,C2	0.01 uF	100V	−20+80%, ceramic	C6,C7	150 uF	15V	±10%, electr, tantalum
C3	47 uF	50V	±10%, electr, tantalum	C8,C10	0.047 uF	25V	±20%, ceramic
C4	0.01 uF	25V	±20%, ceramic	C9	68 uF	15V	±10%, electr, tantalum
C5	15 pF	500V	±0.5 pF, ceramic				
INDUCTORS							
L1		Ferrite core, fixed		L2,L3		Ferrite pot core fixed	
DIODES AND TRANSISTORS							
MR1,MR2, MR4,MR5		1N660		VT1,VT2,VT9			2N2907
MR3		PD9049		VT3			2N3468
MR6		Zener, BZY88/C6V2		VT4,VT5			2N2907A
MR7		Zener, SV4024A		VT6,VT7			2N915
				VT8			2N914
MISCELLANEOUS							
PLQ		Connector, 6-way		TJS,TJT		Connector, test	

TABLE 1014 - COMPONENT SCHEDULE - POWER AMPLIFIER PART B

Prefix 18, Fig 26

CIRCUIT BOARD 18CB1 - Prefix 18-1, Fig 26

Circuit Reference	Value	Rating	Type & Limit	Circuit Reference	Value	Rating	Type & Limit
RESISTORS							
R1,R2,R3,R4	22 ohm	1/4W	±5%, composition	R5,R6	1 k ohm	1/4W	±5%, metal glaze
CAPACITORS							
C1	3.3 uF	15V	±10%, electr, tantalum	C5	0.01 uF	25V	±20%, ceramic
				C6	0.001 uF	500V	±20%, ceramic
C2,C3	0.1 uF	50V	G.M.V. ceramic	C7	0.01 uF	100V	−20+80%, ceramic
C4	100 pF	500V	±5%, ceramic				
TRANSFORMERS							
TR1,TR2		Ferrite core, fixed					
DIODES AND TRANSISTORS							
MR1,MR2			1N660	VT1,VT2			2N3297

CIRCUIT BOARD 18-2CB1 - Prefix 18-2, Fig 26

RESISTORS							
R1	0.75 ohm	1/4W	±2%, metal glaze	R5,R6	3.9 k ohm	1/4W	±5%, metal glaze
R2	560 ohm	"	" " "	R7	220 ohm	"	" " "
R3	4.7 k ohm	"	" " "	R8,R9	820 ohm	"	" " "
R4	1 M ohm	1/4W	±5%, metal glaze				
CAPACITORS							
C1	0.01 uF	25V	±20%, ceramic				
DIODES AND TRANSISTORS							
MR1			BZY88C6V2	VT3			2N2907
VT1			2N3726	VT4,VT5			2N918
VT2			2N914				

CIRCUIT BOARD 18-3CB1 - Prefix 18-3, Fig 26

RESISTORS							
R1	1.8 k ohm	1/4W	±5%, metal glaze				
CAPACITORS							
C1	47 uF	6V	±10%, electr, tantalum	C2	0.01 uF	25V	±20%, ceramic
DIODES							
MR1			1N756A	MR2,MR3			PD9049

TABLE 1015 - COMPONENT SCHEDULE - COUPLER, ANTENNA, CU-F1

Prefix 19, Fig 33

Circuit Reference	Value	Rating	Type & Limit	Circuit Reference	Value	Rating	Type & Limit
MISCELLANEOUS							
L1,L2,L3		Inductor, ferrite core, adjustable		SWA,SWB,SWC		Microswitch	

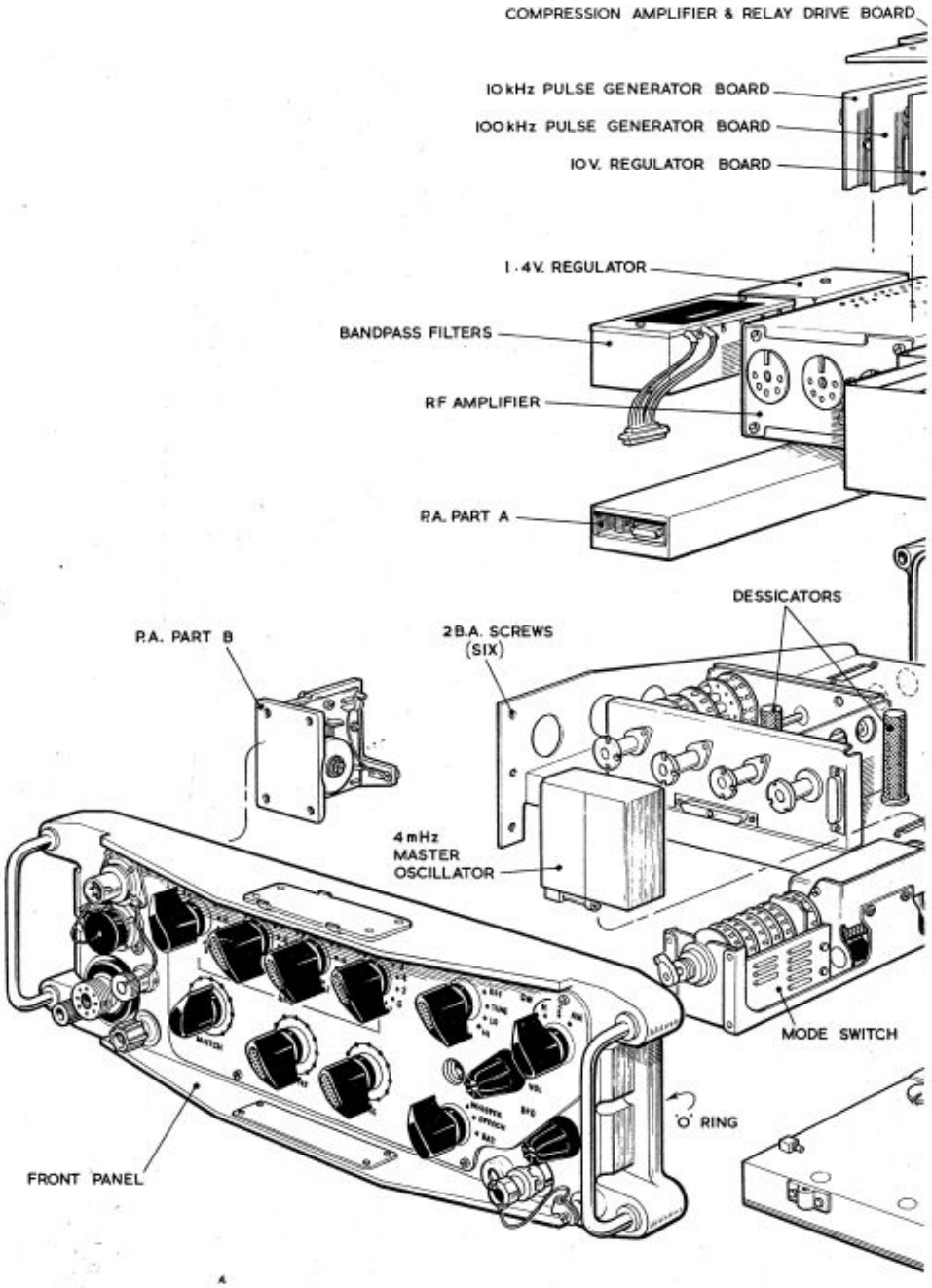
COMPRESSION AMPLIFIER & RELAY DRIVE BOARD
10 kHz PULSE GENERATOR BOARD
100 kHz PULSE GENERATOR BOARD
10 V. REGULATOR BOARD
1·4V. REGULATOR
BANDPASS FILTERS
RF AMPLIFIER
P.A. PART A
DESSICATORS
P.A. PART B
2 B.A. SCREWS (SIX)
4 mHz MASTER OSCILLATOR
MODE SWITCH
'O' RING
FRONT PANEL

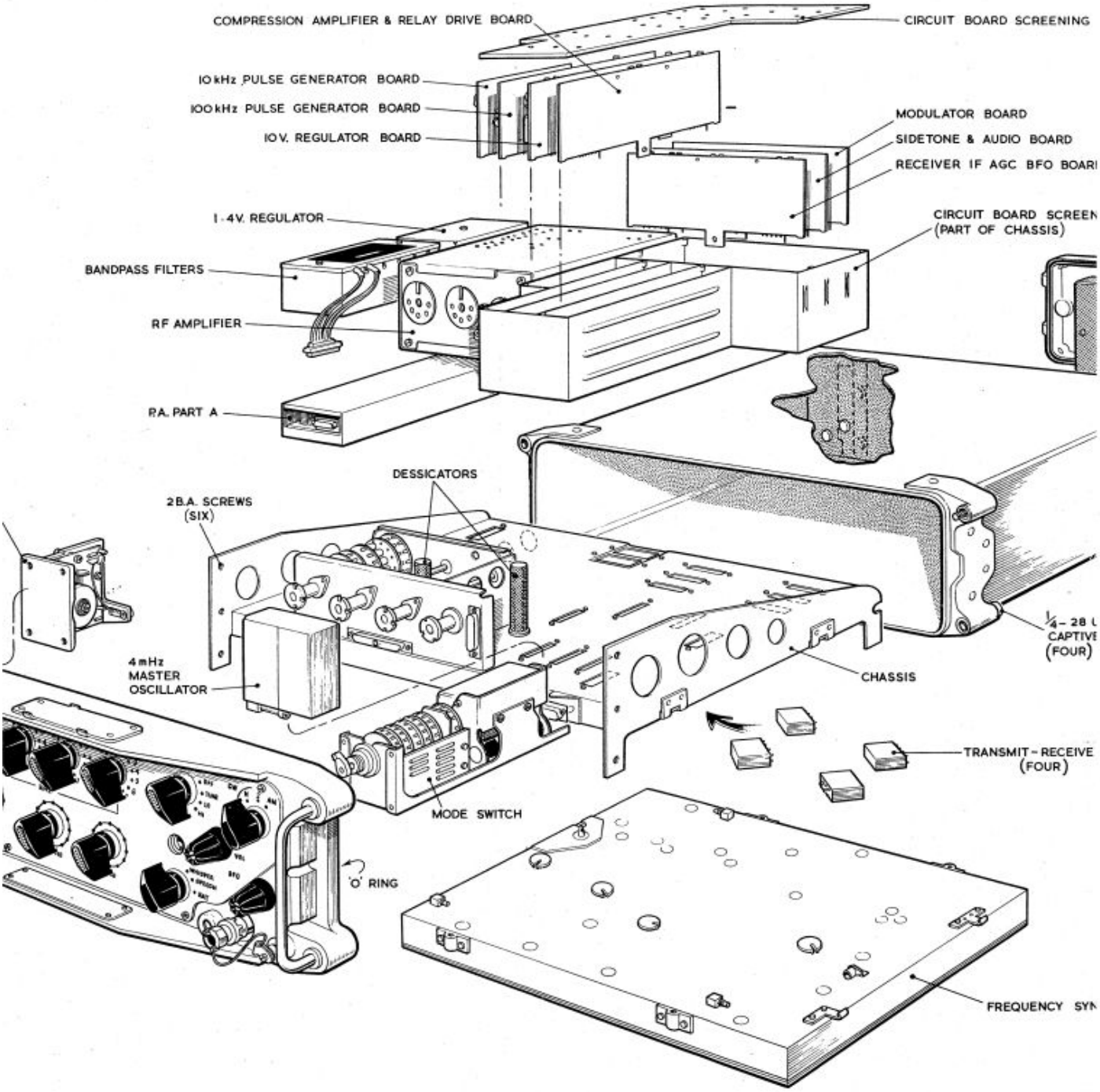

FIG 1001 EXPLODED VIEW RT UNIT

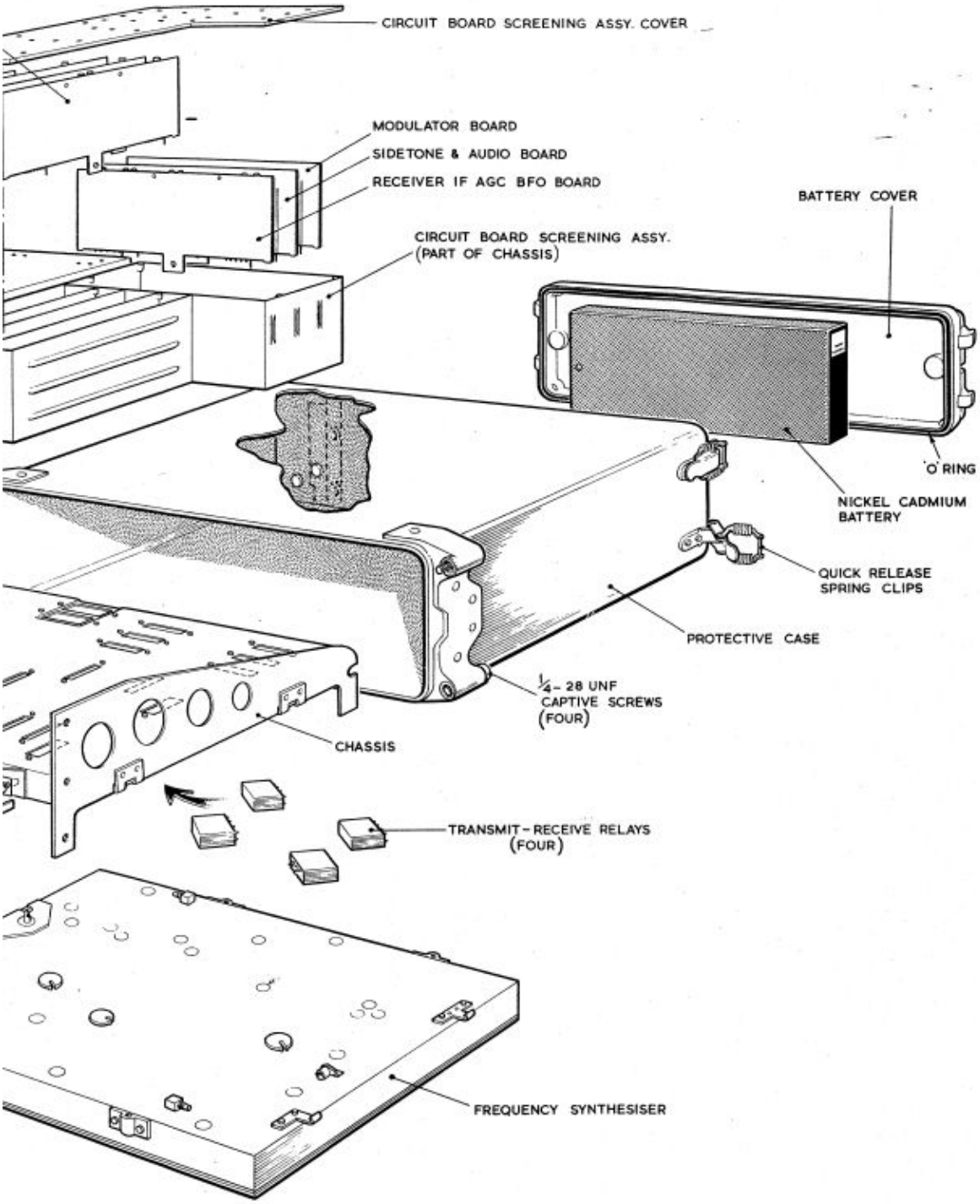

PLODED VIEW RT UNIT

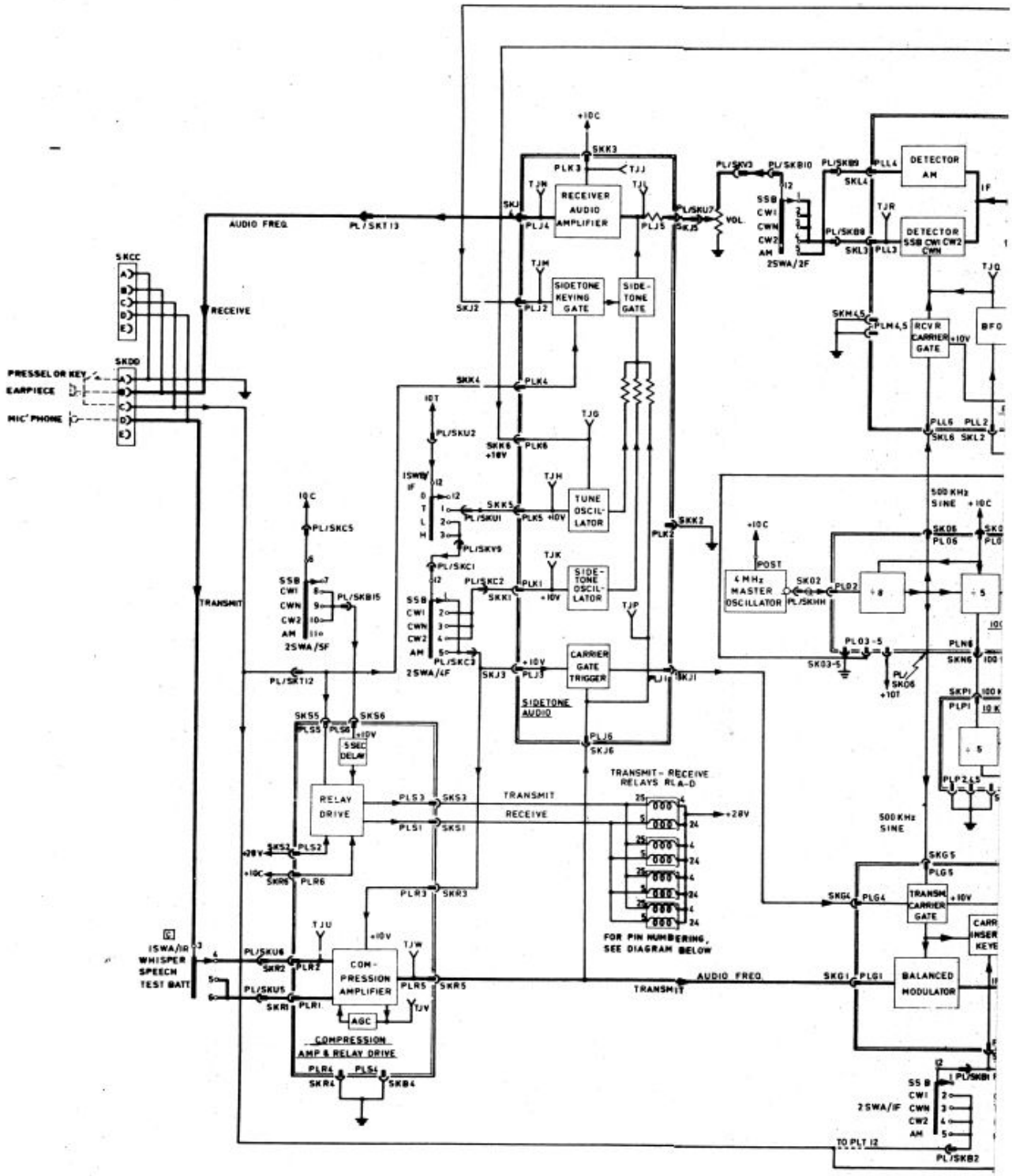
RECEIVER AUDIO AMPLIFIER
DETECTOR AM
DETECTOR SSB CW1 CW2 CWN
SIDETONE KEYING GATE
SIDE-TONE GATE
RCVR CARRIER GATE
BFO
TUNE OSCIL-LATOR
SIDE-TONE OSCIL-LATOR
CARRIER GATE TRIGGER
SIDETONE AUDIO
4 MHz MASTER OSCILLATOR
500 KHz SINE
TRANSM CARRIER GATE
BALANCED MODULATOR
RELAY DRIVE
5 SEC DELAY
COM-PRESSION AMPLIFIER
AGC
COMPRESSION AMP & RELAY DRIVE
TRANSMIT-RECEIVE RELAYS RLA-D
FOR PIN NUMBERING, SEE DIAGRAM BELOW
AUDIO FREQ.
TRANSMIT
RECEIVE
PRESSEL OR KEY
EARPIECE
MIC' PHONE
WHISPER SPEECH TEST BATT
TO PLT 12

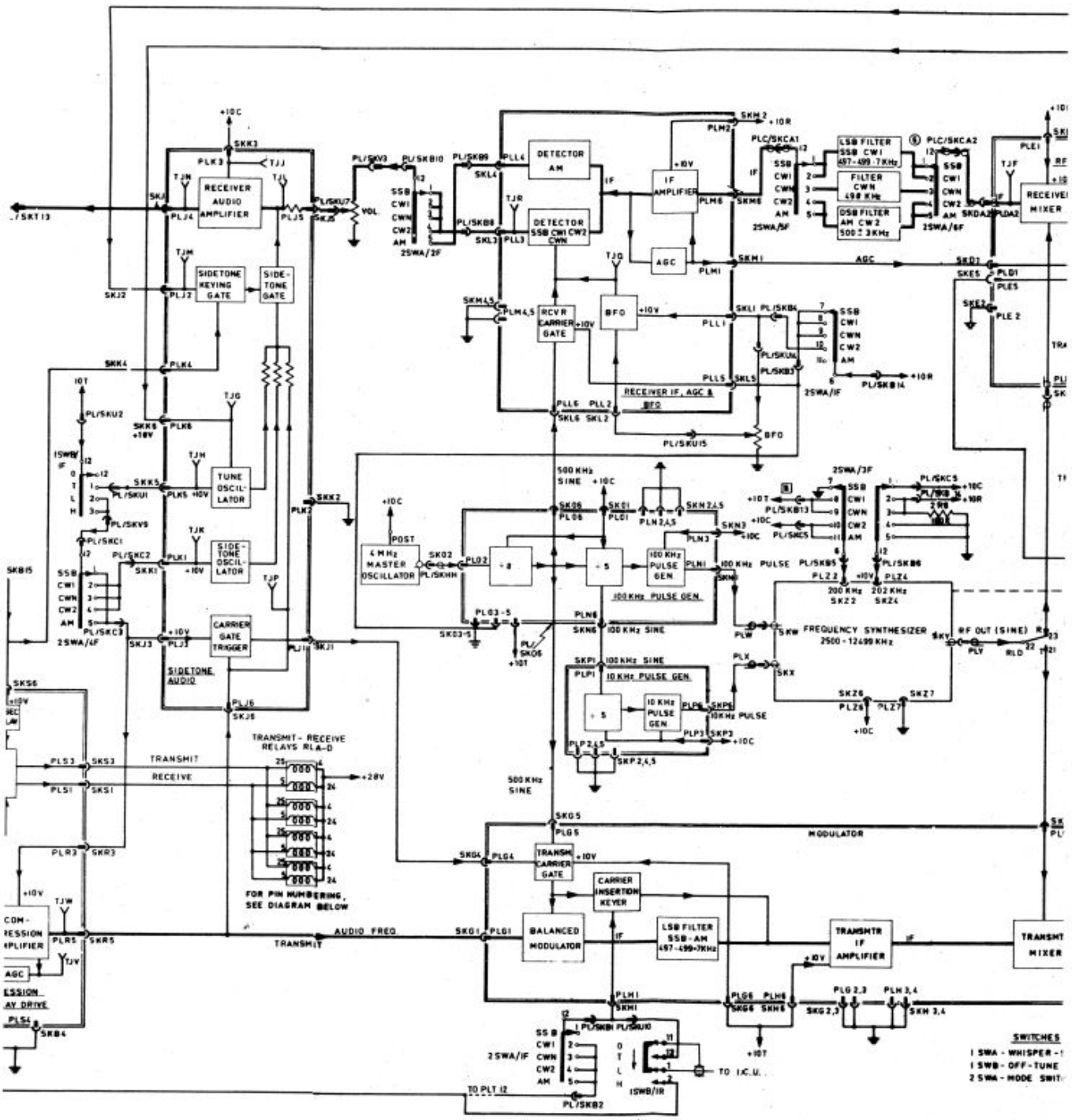

FIG 1002 PRC-F1 B1

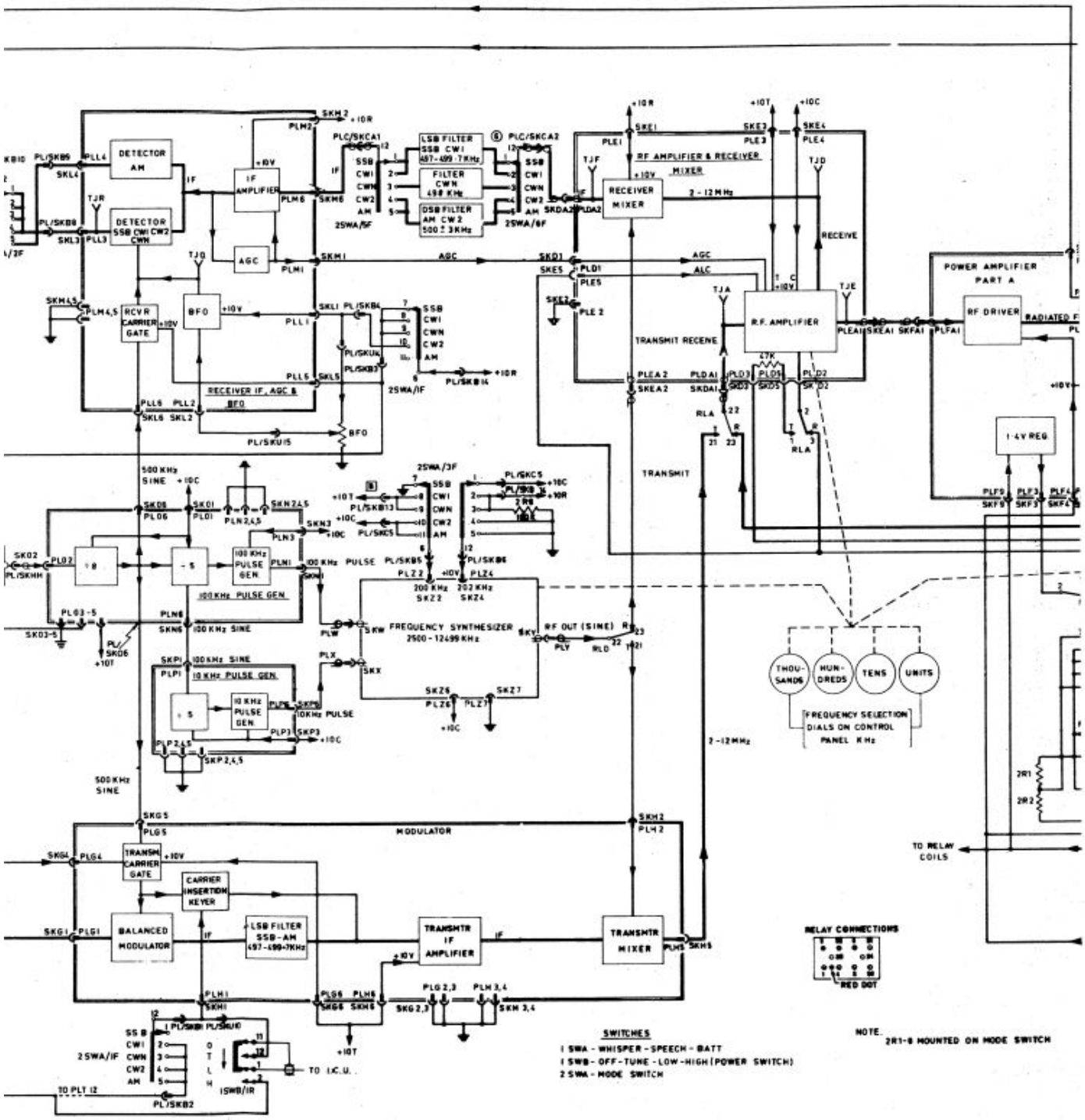

FIG 1002 PRC-F1 BLOCK SCHEMATIC

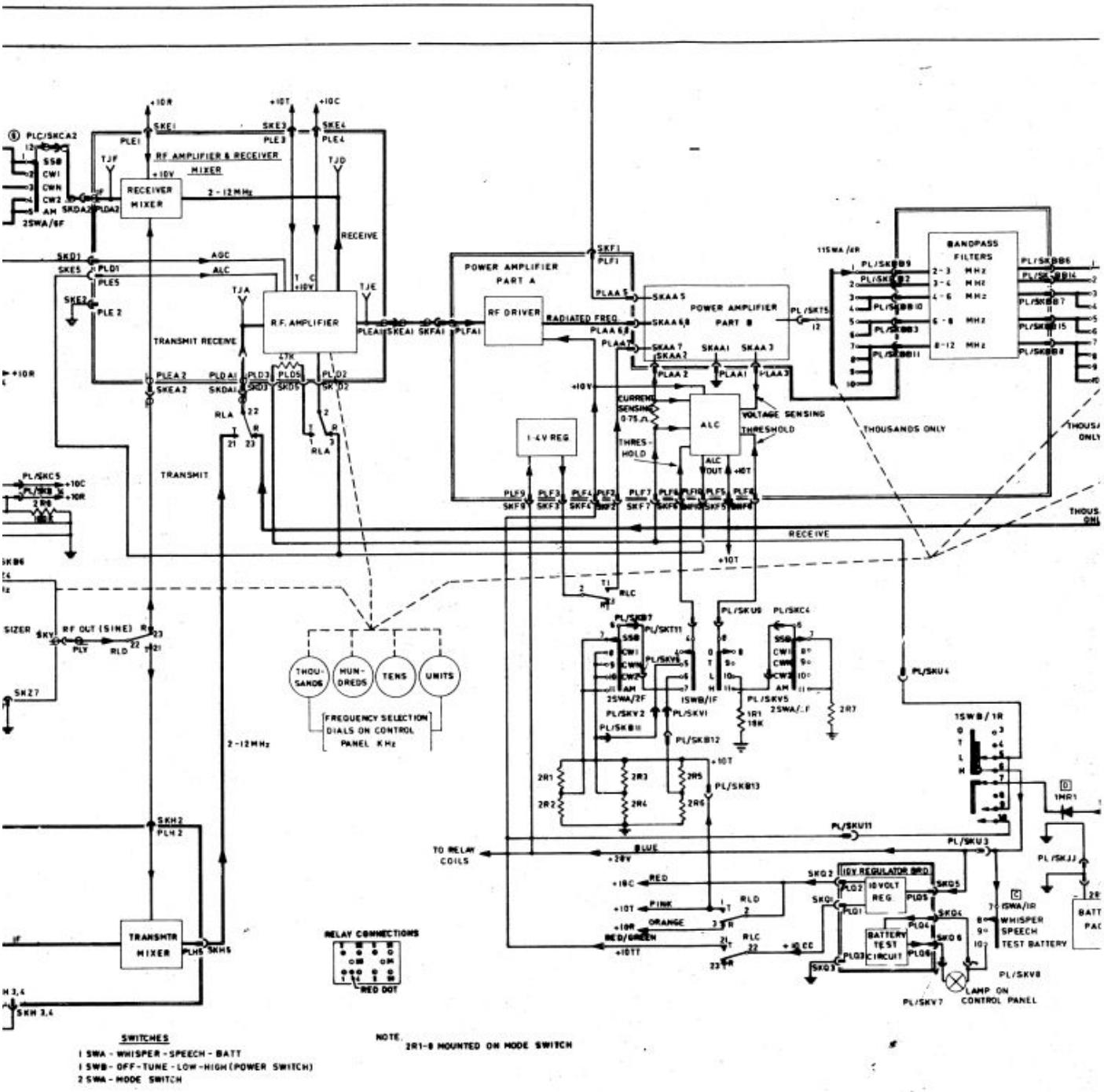

FIG 1002 PRC-F1 BLOCK SCHEMATIC

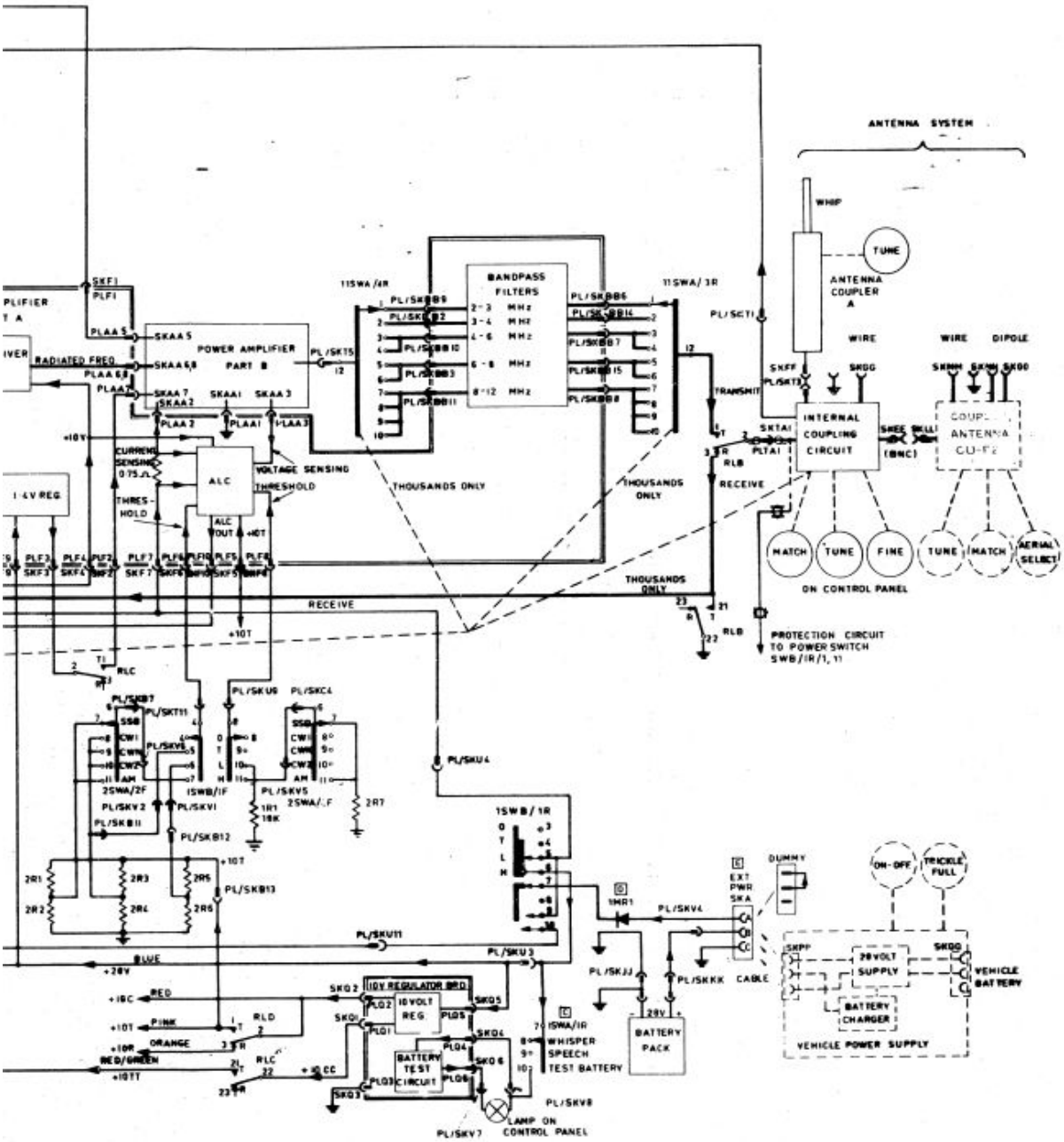
ANTENNA SYSTEM
WHIP
TUNE
ANTENNA COUPLER A
WIRE
WIRE
DIPOLE
BANDPASS FILTERS
2-3 MHz
3-4 MHz
4-6 MHz
6-8 MHz
8-12 MHz
POWER AMPLIFIER PART B
RADIATED FREQ
ALC
VOLTAGE SENSING
THRESHOLD
THOUSANDS ONLY
TRANSMIT
RECEIVE
INTERNAL COUPLING CIRCUIT
(BNC)
MATCH
TUNE
FINE
TUNE
MATCH
AERIAL SELECT
ON CONTROL PANEL
PROTECTION CIRCUIT TO POWER SWITCH SWB/1R/1, 11
10V REGULATOR BRD
10 VOLT REG
BATTERY TEST CIRCUIT
WHISPER SPEECH TEST BATTERY
LAMP ON CONTROL PANEL
BATTERY PACK
DUMMY
EXT PWR SKA
CABLE
ON-OFF
TRICKLE FULL
28 VOLT SUPPLY
BATTERY CHARGER
VEHICLE POWER SUPPLY
VEHICLE BATTERY

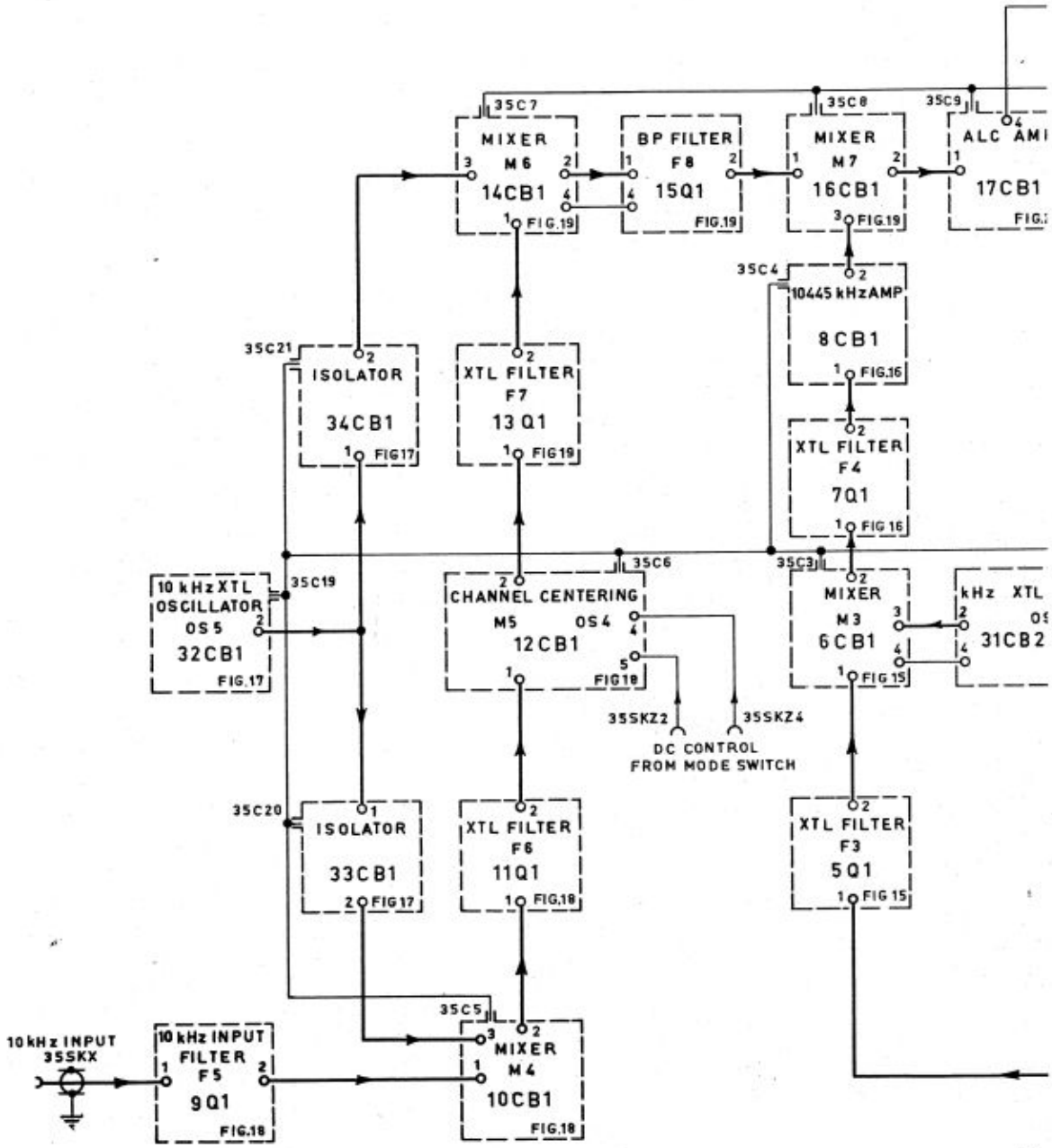
35C7
MIXER
M6
14CB1
FIG.19
BP FILTER
F8
15Q1
FIG.19
35C8
MIXER
M7
16CB1
FIG.19
35C9
ALC AMI
17CB1
35C4
10445 kHz AMP
8CB1
FIG.16
35C21
ISOLATOR
34CB1
FIG17
XTL FILTER
F7
13Q1
FIG19
XTL FILTER
F4
7Q1
FIG 16
10 kHz XTL
OSCILLATOR
OS5
32CB1
FIG.17
35C19
35C6
CHANNEL CENTERING
M5
OS4
12CB1
FIG18
35C3
MIXER
M3
6CB1
FIG 15
kHz XTL
31CB2
35SKZ2
35SKZ4
DC CONTROL
FROM MODE SWITCH
35C20
ISOLATOR
33CB1
FIG17
XTL FILTER
F6
11Q1
FIG.18
XTL FILTER
F3
5Q1
FIG 15
35C5
10 kHz INPUT
35SKX
10 kHz INPUT
FILTER
F5
9Q1
FIG.18
MIXER
M4
10CB1
FIG.18

FIG 1003

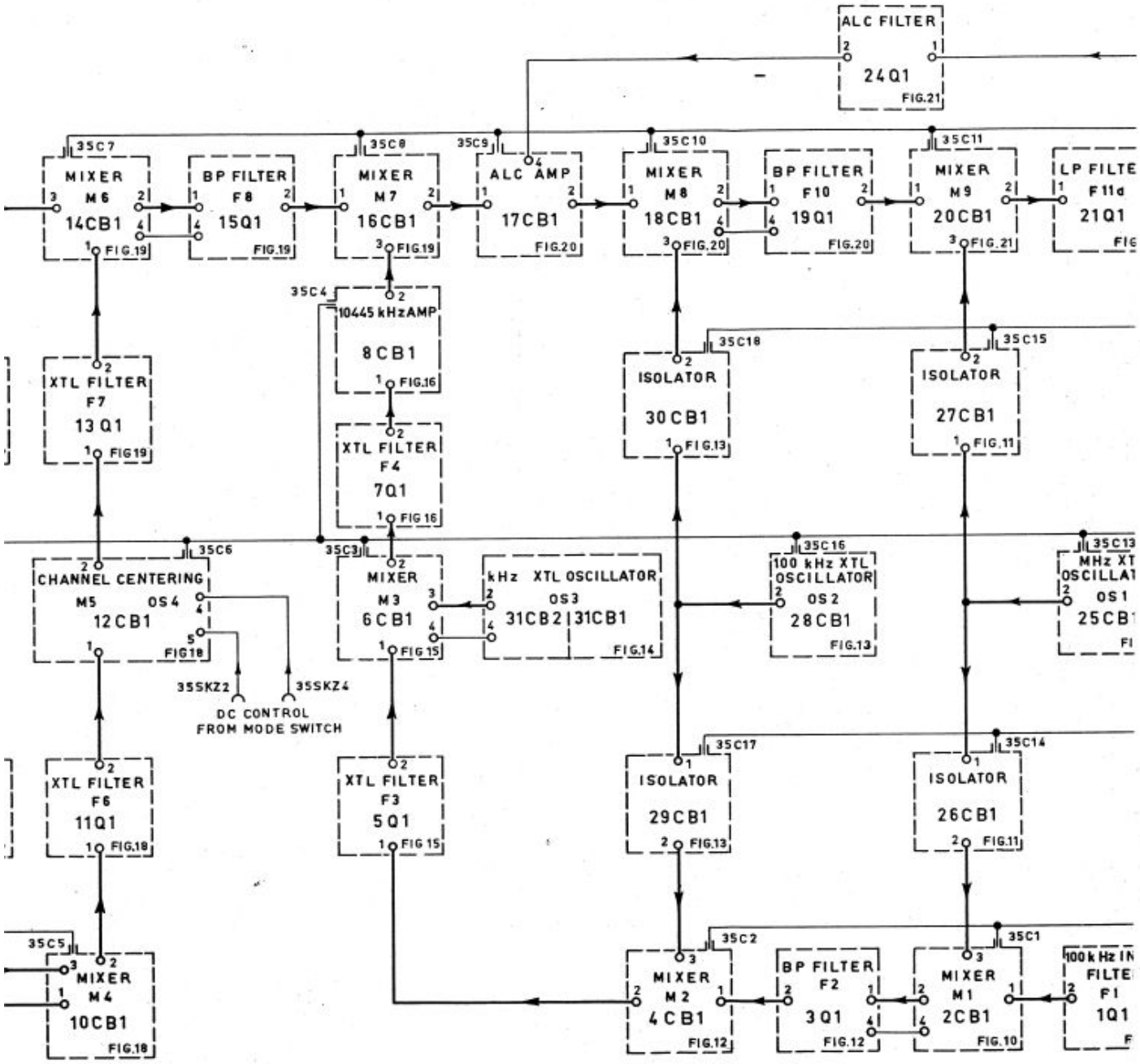

FIG 1003 SYNTHESISER WIRING DIAGRAM

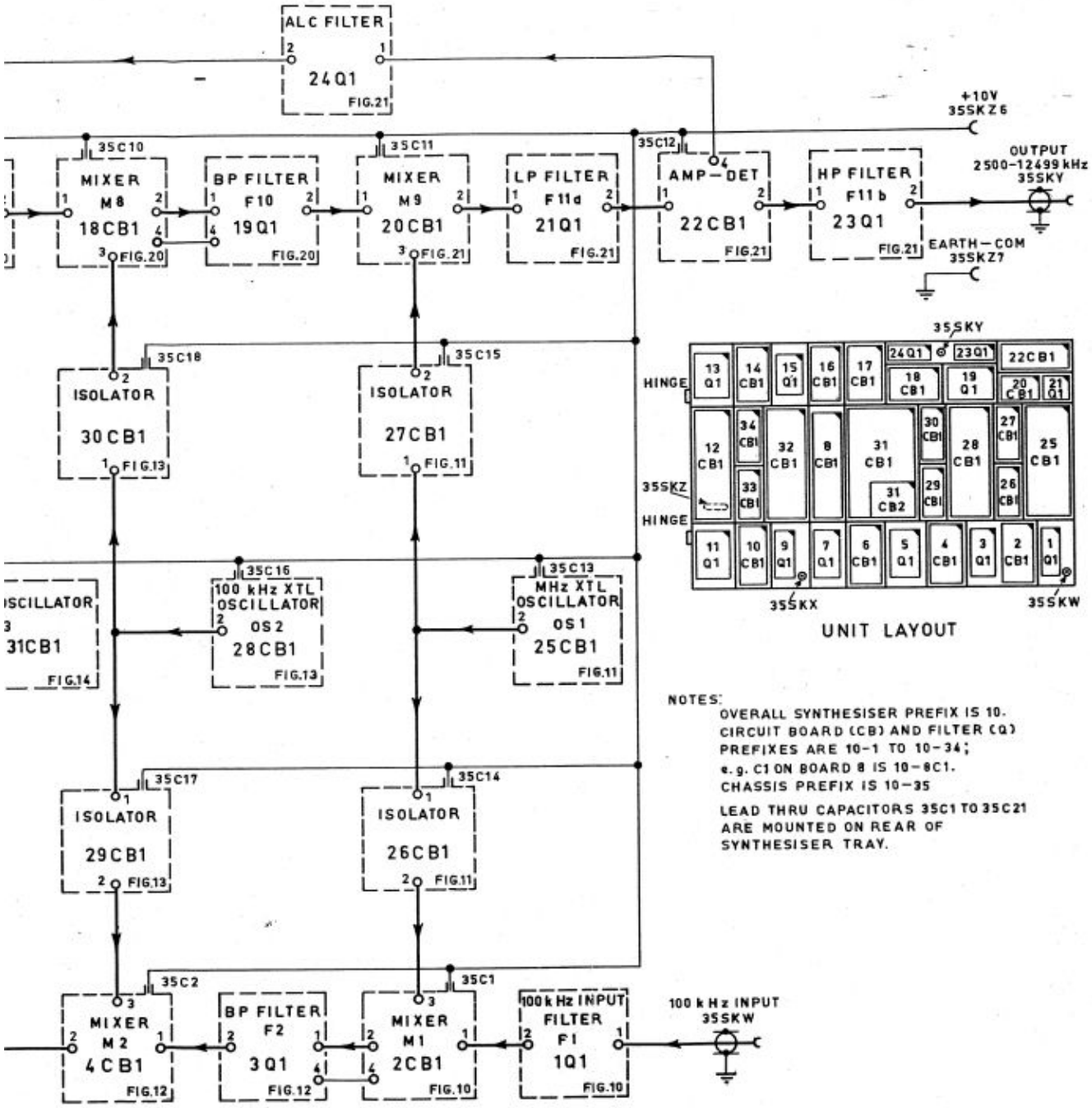

NOTES:
OVERALL SYNTHESISER PREFIX IS 10.
CIRCUIT BOARD (CB) AND FILTER (Q) PREFIXES ARE 10-1 TO 10-34;
e.g. C1 ON BOARD 8 IS 10-8C1.
CHASSIS PREFIX IS 10-35
LEAD THRU CAPACITORS 35C1 TO 35C21 ARE MOUNTED ON REAR OF SYNTHESISER TRAY.

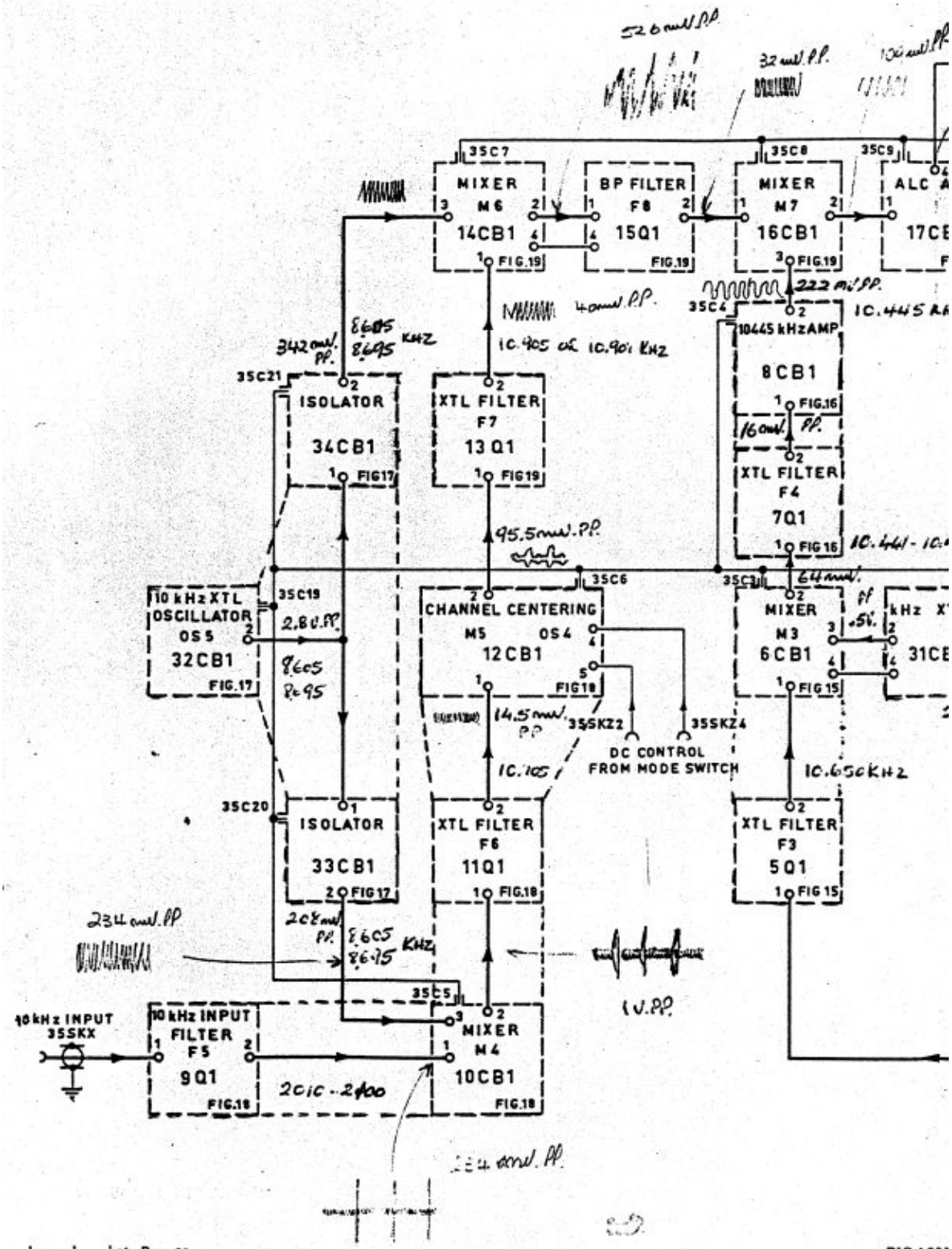
35C7
MIXER
M6
14CB1
FIG.19
BP FILTER
F8
15Q1
FIG.19
35C8
MIXER
M7
16CB1
FIG.19
35C9
ALC
17CB
35C21
ISOLATOR
34CB1
FIG17
XTL FILTER
F7
13Q1
FIG19
10445 kHz AMP
8CB1
FIG.16
XTL FILTER
F4
7Q1
FIG 16
35C4
35C19
10 kHz XTL
OSCILLATOR
OS5
32CB1
FIG.17
35C6
CHANNEL CENTERING
M5
OS4
12CB1
FIG18
35C3
MIXER
M3
6CB1
FIG 15
31CB
35SKZ2
35SKZ4
DC CONTROL
FROM MODE SWITCH
35C20
ISOLATOR
33CB1
FIG17
XTL FILTER
F6
11Q1
FIG.18
XTL FILTER
F3
5Q1
FIG 15
35C5
10 kHz INPUT
35SKX
10 kHz INPUT
FILTER
F5
9Q1
FIG.18
MIXER
M4
10CB1
FIG.18
2010 - 2400
1 V.P.P.

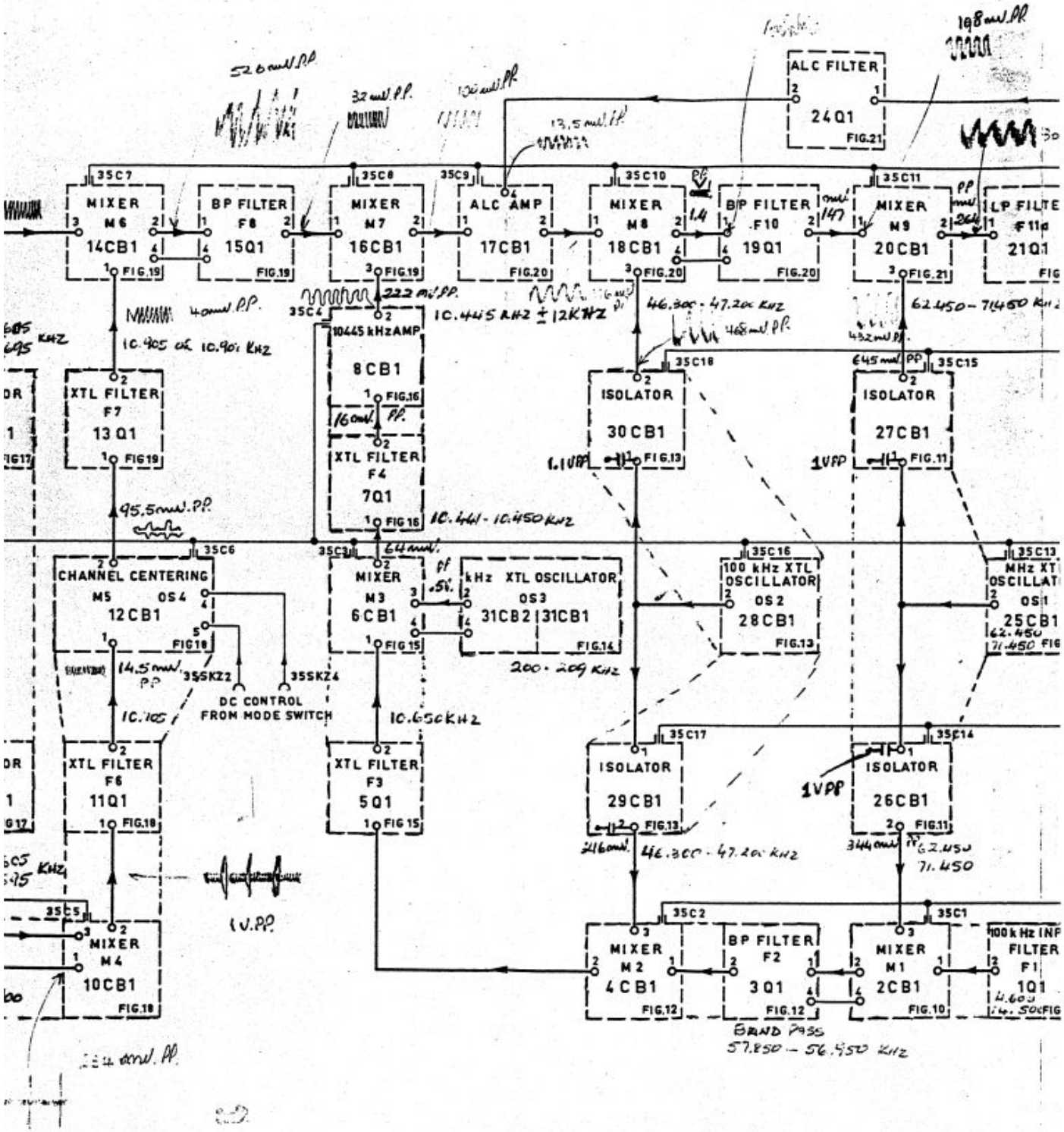

FIG 1003 SYNTHESISER WIRING DIAGRAM

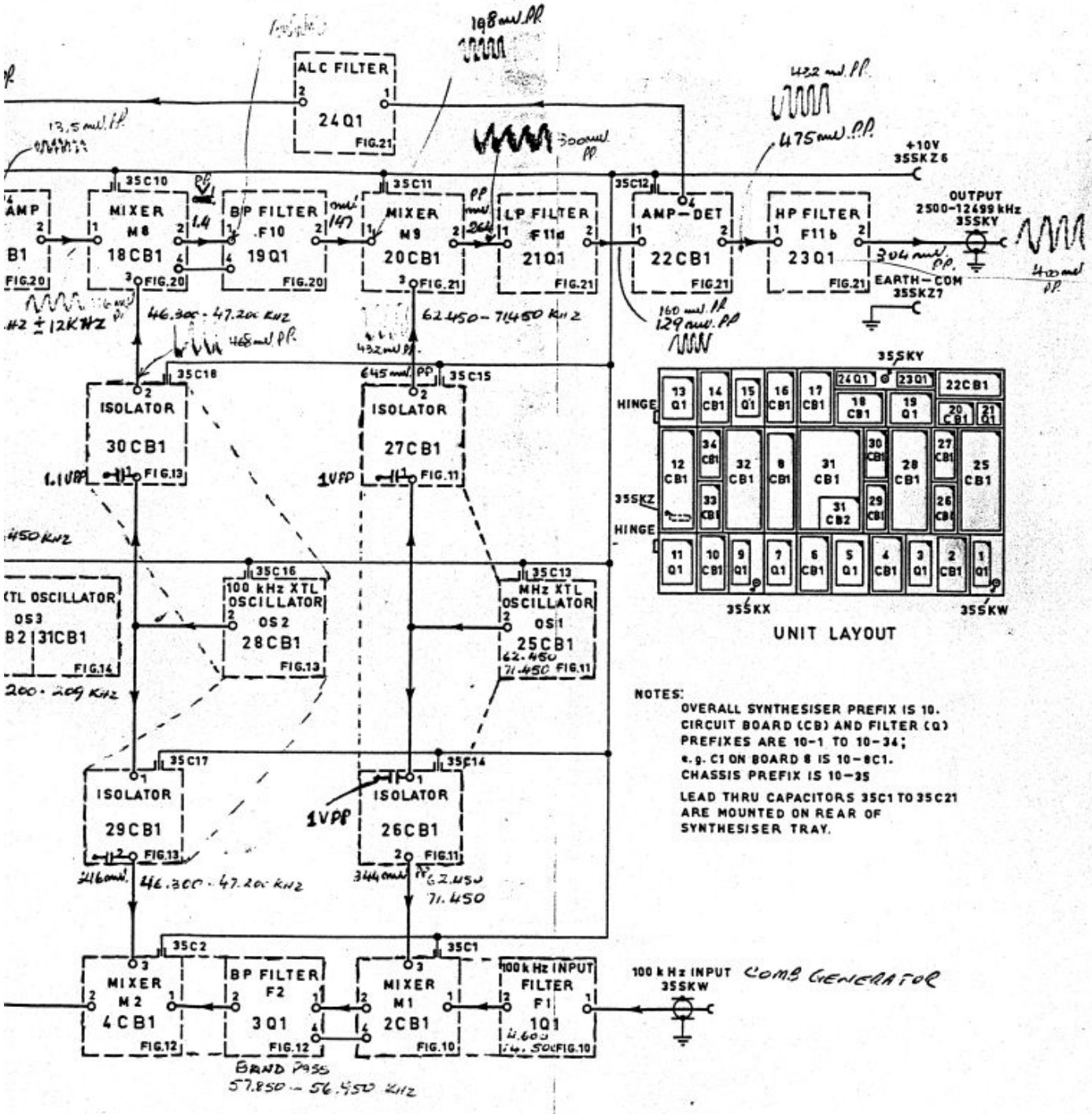

NOTES:

OVERALL SYNTHESISER PREFIX IS 10.
CIRCUIT BOARD (CB) AND FILTER (Q) PREFIXES ARE 10-1 TO 10-34;
e.g. C1 ON BOARD 8 IS 10-8C1.
CHASSIS PREFIX IS 10-35

LEAD THRU CAPACITORS 35C1 TO 35C21 ARE MOUNTED ON REAR OF SYNTHESISER TRAY.

3 SYNTHESISER WIRING DIAGRAM

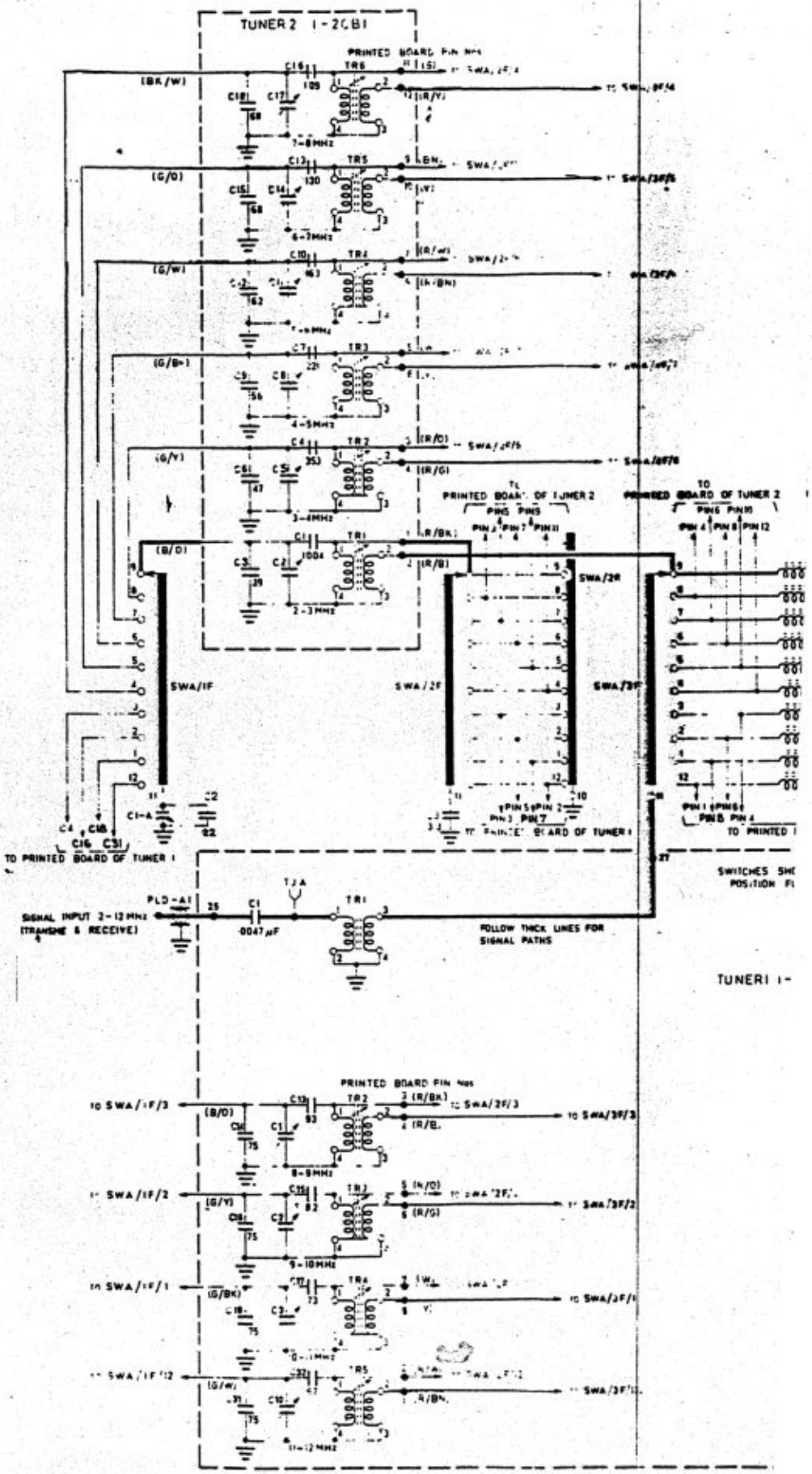
TUNER 2 1-2CB1
PRINTED BOARD PIN Nos
TR6
TR5
TR4
TR3
TR2
TR1
7-8MHz
6-7MHz
5-6MHz
4-5MHz
3-4MHz
2-3MHz
(BK/W)
(G/O)
(G/W)
(G/B)
(G/Y)
(B/O)
SWA/1F
SWA/2F
SWA/2R
SWA/3F
TO PRINTED BOARD OF TUNER 1
TO PRINTED BOARD OF TUNER 2
SIGNAL INPUT 2-12 MHz
(TRANSMIT & RECEIVE)
.0047 µF
FOLLOW THICK LINES FOR
SIGNAL PATHS
TUNER1 1-
8-9MHz
9-10MHz
10-11MHz
11-12MHz
10 SWA/1F/3
10 SWA/3F/3
10 SWA/1F/2
10 SWA/3F/2
10 SWA/1F/1
10 SWA/3F/1

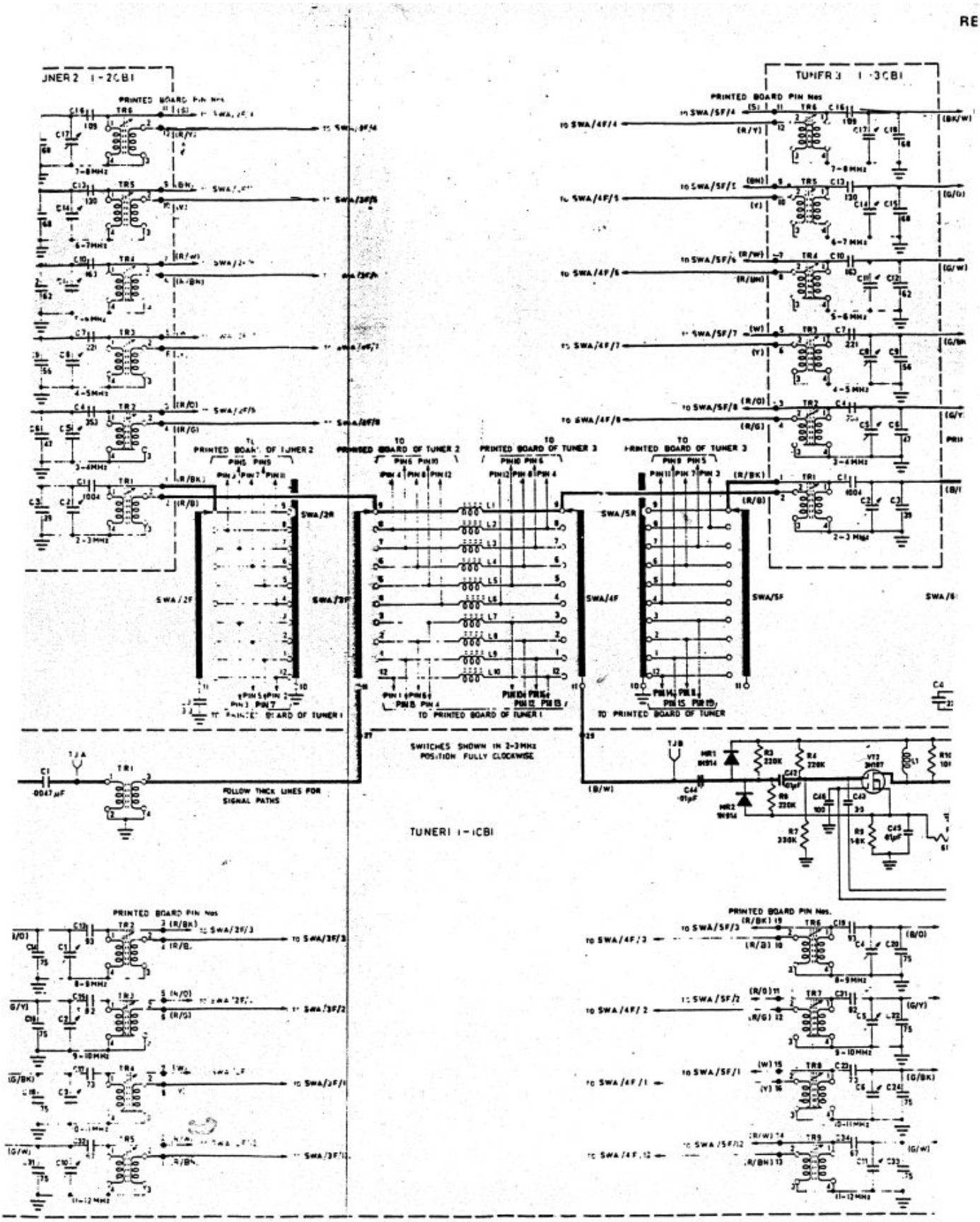
TUNER 2 1-2CBI
TUNER 3 1-3CBI
PRINTED BOARD PIN Nos
TO PRINTED BOARD OF TUNER 2
TO PRINTED BOARD OF TUNER 3
TO PRINTED BOARD OF TUNER 1
SWITCHES SHOWN IN 2-3MHz POSITION FULLY CLOCKWISE
FOLLOW THICK LINES FOR SIGNAL PATHS
TUNER 1-1CBI

FIG 40 –

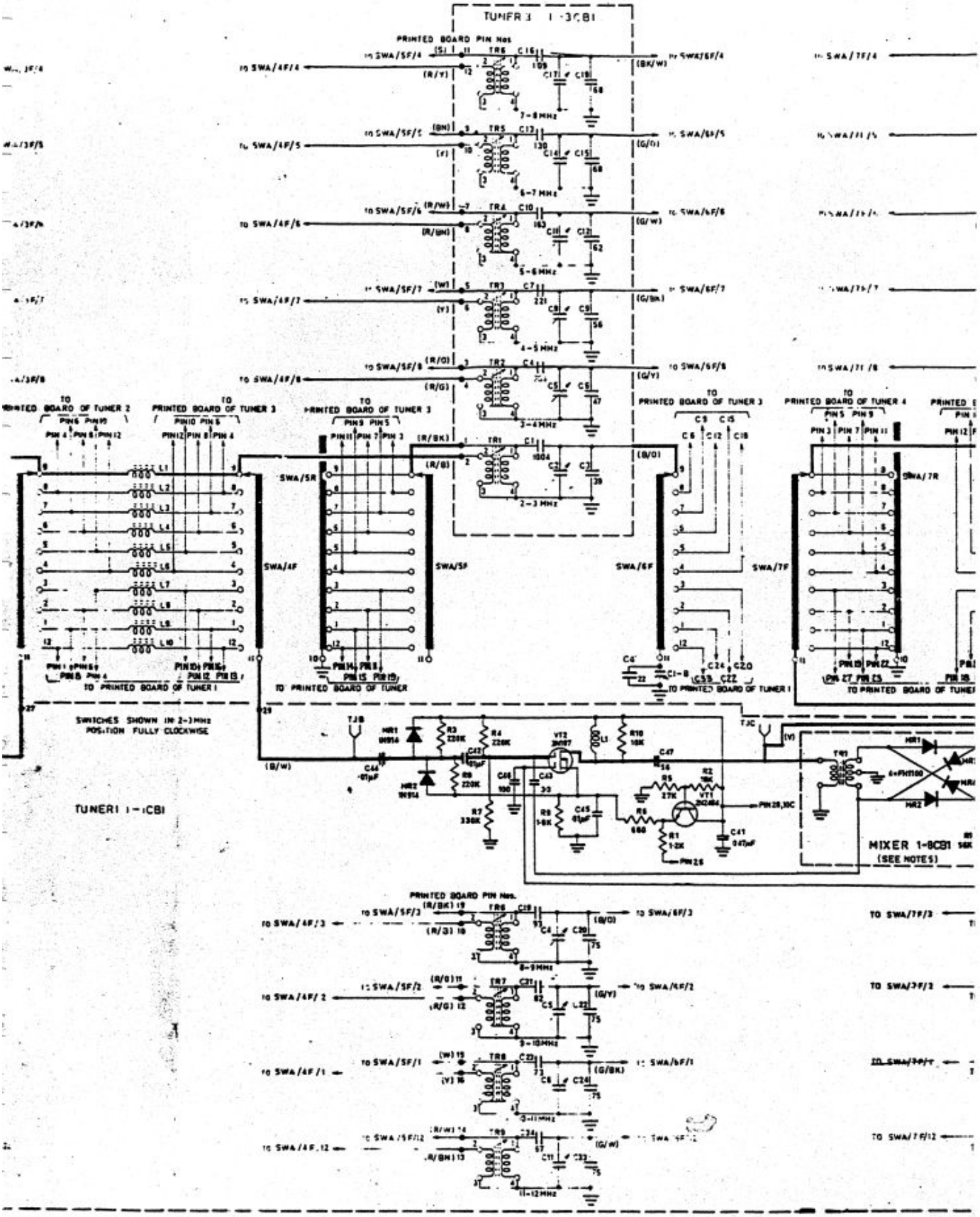

FIG 40 — RF AMPLIFIER CIRCUIT

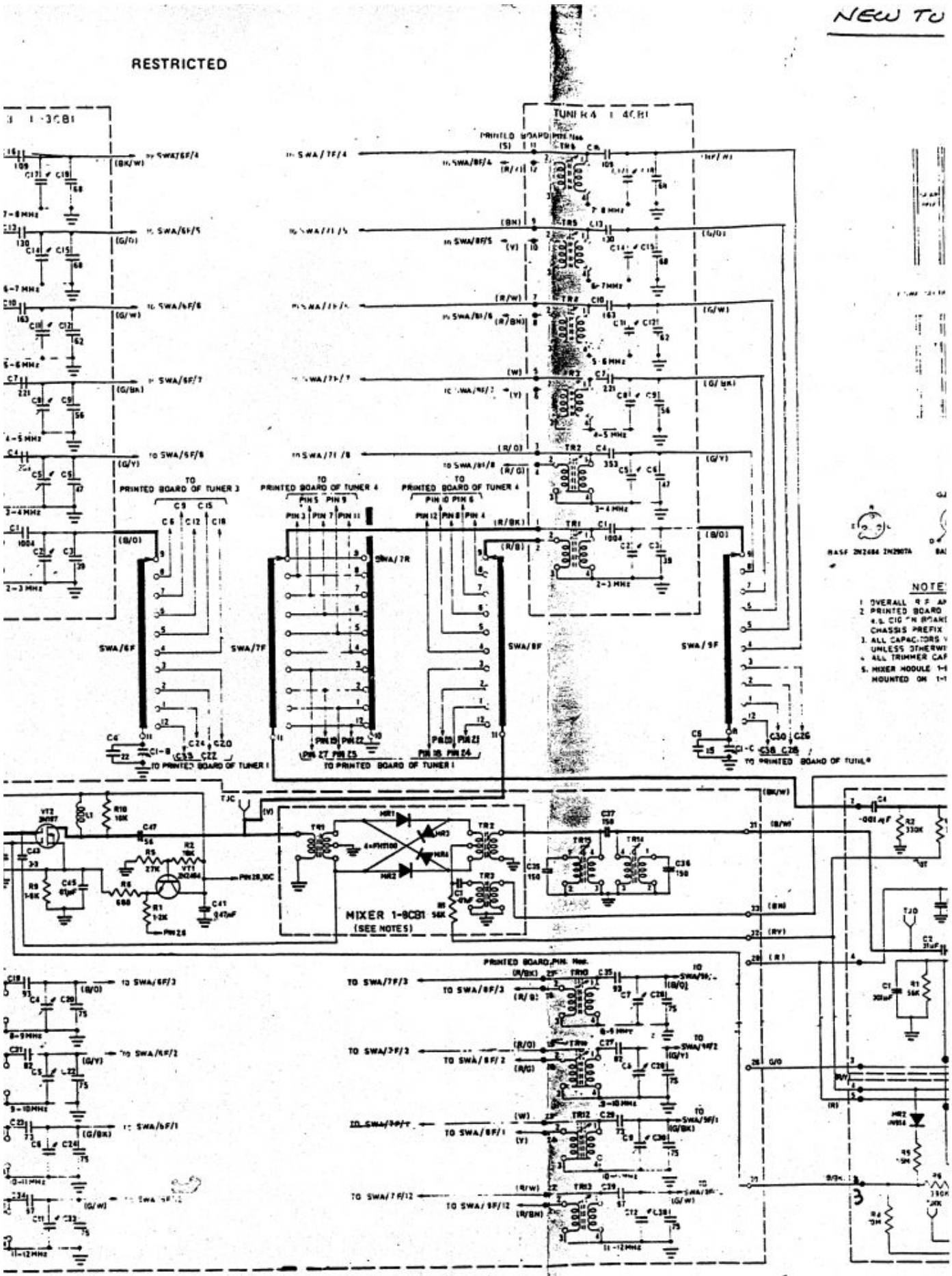

FIG 40 — RF AMPLIFIER CIRCUIT

NEW TUNNER.

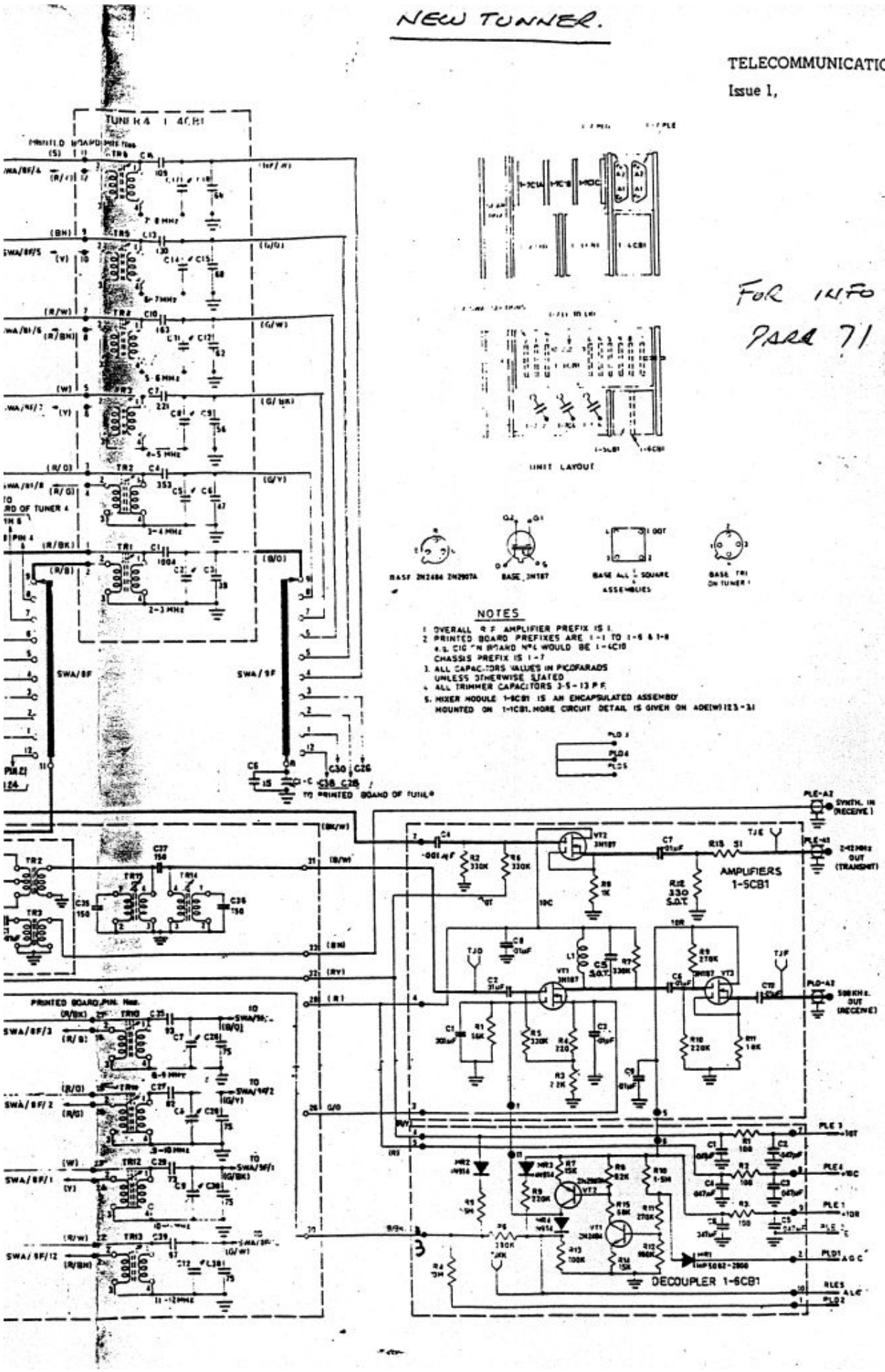

FOR INFO SEE PARA 71

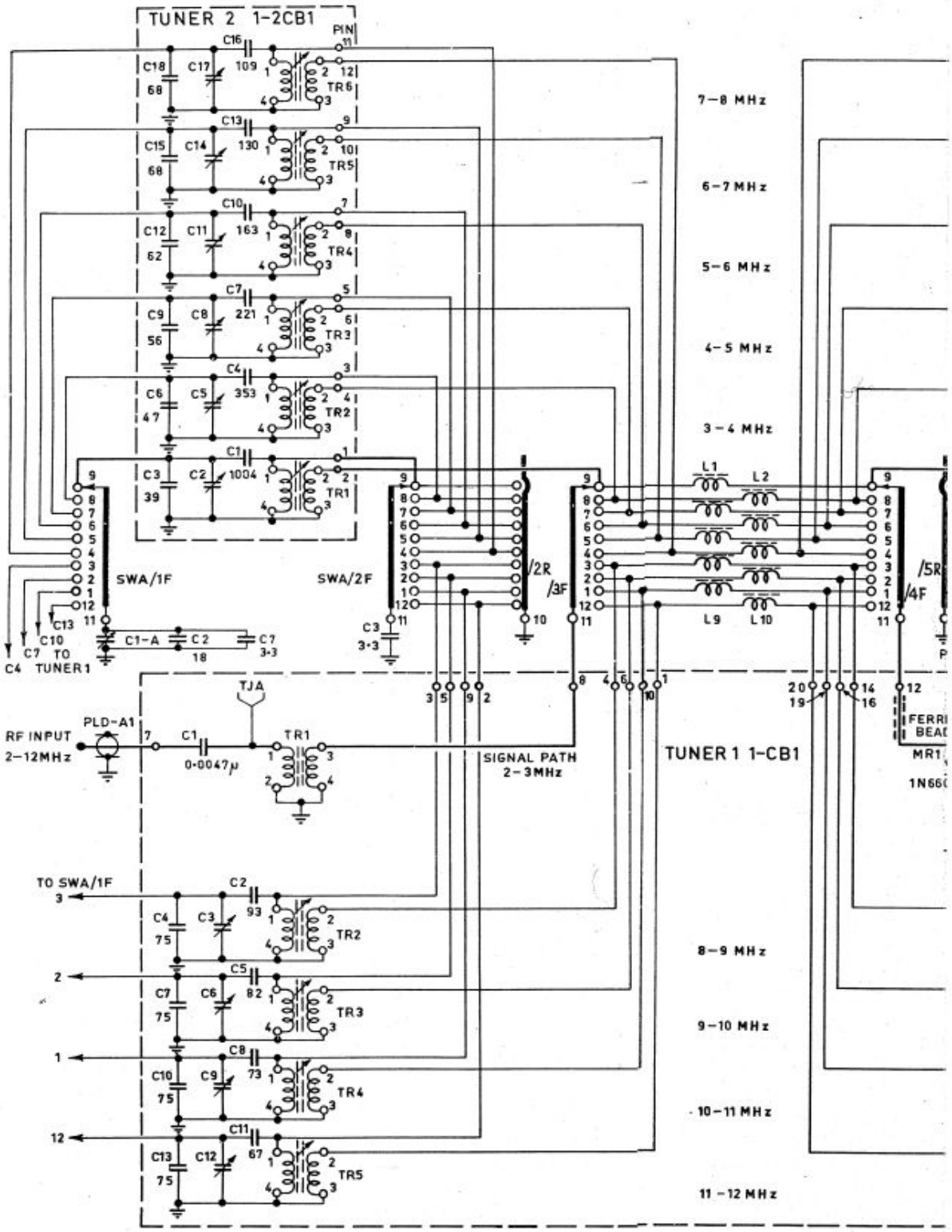
TUNER 2 1-2CB1
PIN
7-8 MHz
6-7 MHz
5-6 MHz
4-5 MHz
3-4 MHz
SWA/1F
SWA/2F
/2R
/3F
/4F
/5R
L1
L2
L9
L10
C1-A
C2
C7
3·3
18
C3
3·3
C4 TO TUNER1
RF INPUT
2-12MHz
PLD-A1
C1
0·0047μ
TJA
TR1
SIGNAL PATH
2-3MHz
TUNER 1 1-CB1
FERRITE BEAD
MR1
1N660
TO SWA/1F
8-9 MHz
9-10 MHz
10-11 MHz
11-12 MHz

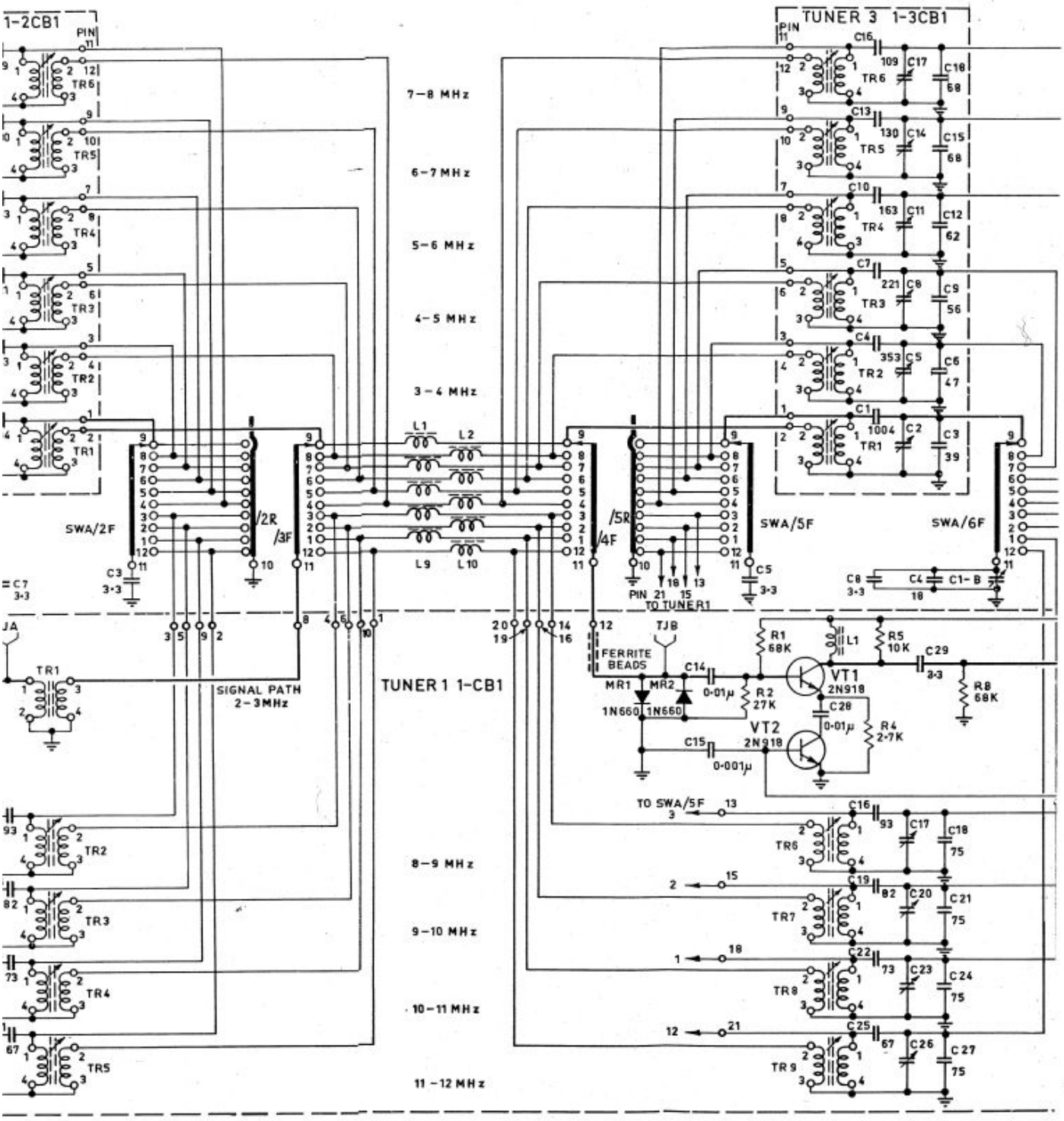

FIG 1004 RF AMP

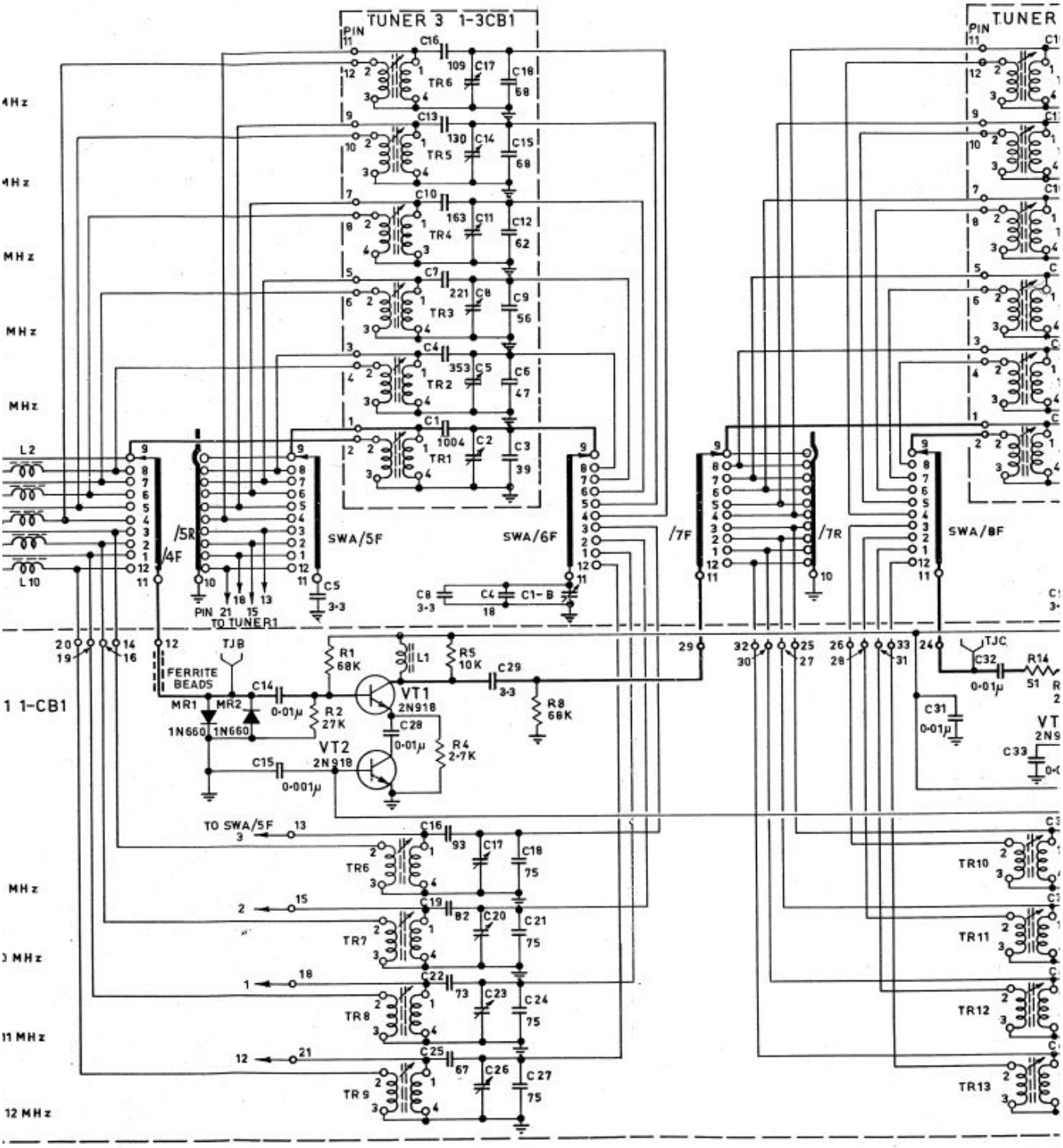

FIG 1004 RF AMPLIFIER CIRCUIT

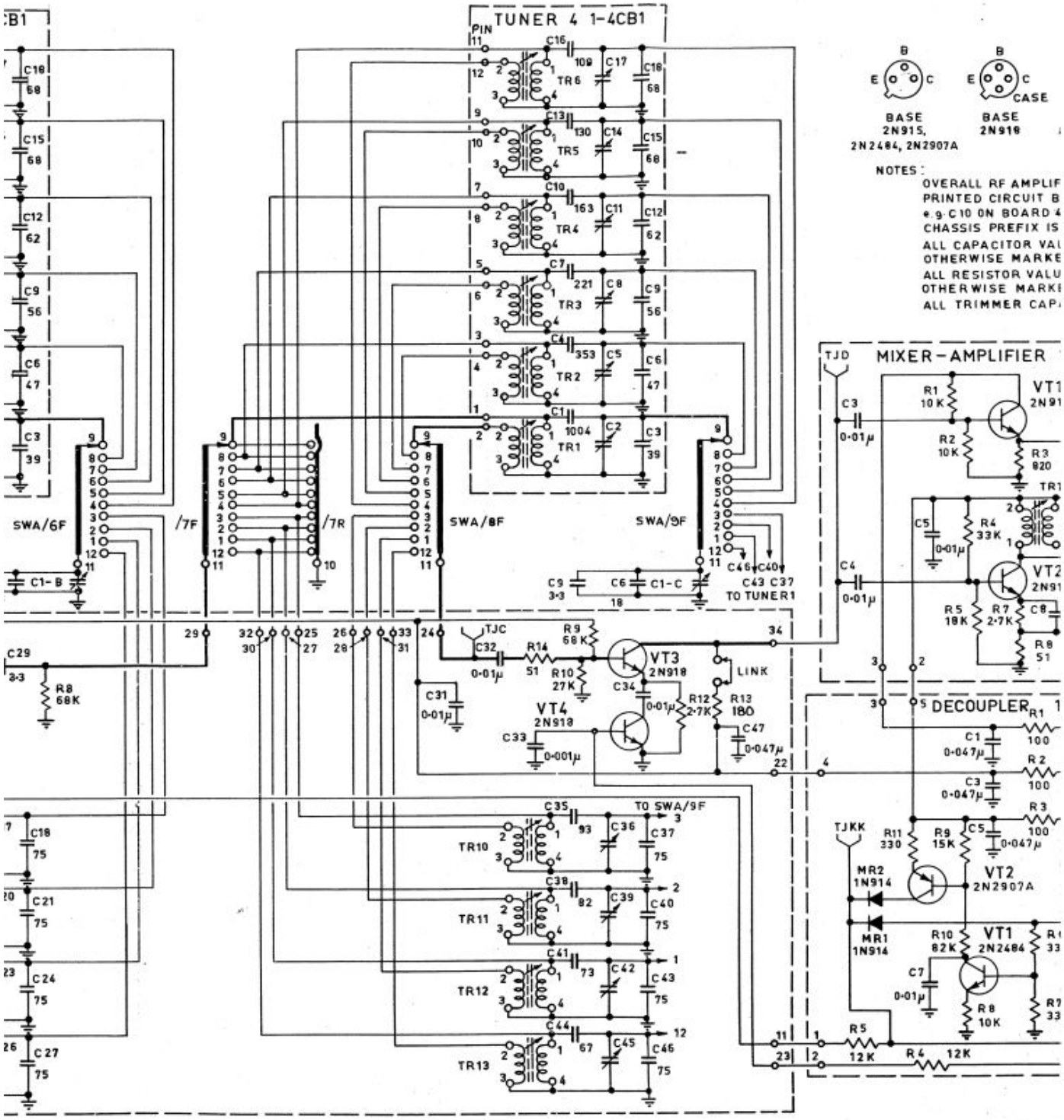

FIG 1004 RF AMPLIFIER CIRCUIT

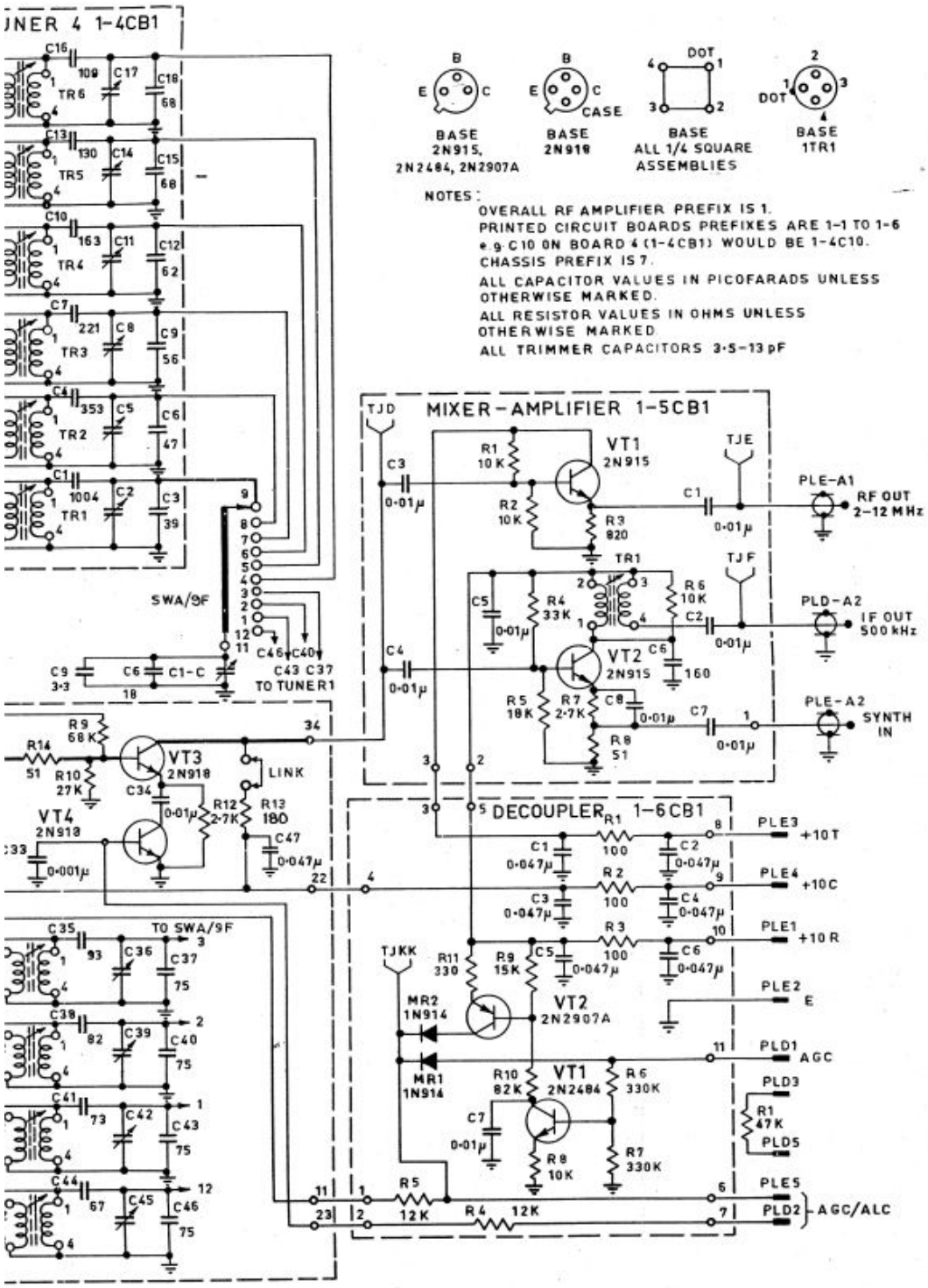
UNER 4 1-4CB1
BASE 2N915, 2N2484, 2N2907A
BASE 2N918
BASE ALL 1/4 SQUARE ASSEMBLIES
BASE 1TR1
NOTES:
OVERALL RF AMPLIFIER PREFIX IS 1.
PRINTED CIRCUIT BOARDS PREFIXES ARE 1-1 TO 1-6
e.g. C10 ON BOARD 4 (1-4CB1) WOULD BE 1-4C10.
CHASSIS PREFIX IS 7.
ALL CAPACITOR VALUES IN PICOFARADS UNLESS OTHERWISE MARKED.
ALL RESISTOR VALUES IN OHMS UNLESS OTHERWISE MARKED.
ALL TRIMMER CAPACITORS 3·5-13 pF
MIXER-AMPLIFIER 1-5CB1
VT1 2N915
VT2 2N915
RF OUT 2-12 MHz
IF OUT 500 kHz
SYNTH IN
SWA/9F
TO TUNER 1
VT3 2N918
VT4 2N918
LINK
DECOUPLER 1-6CB1
VT2 2N2907A
VT1 2N2484
TO SWA/9F
+10T
+10C
+10R
E
AGC
AGC/ALC

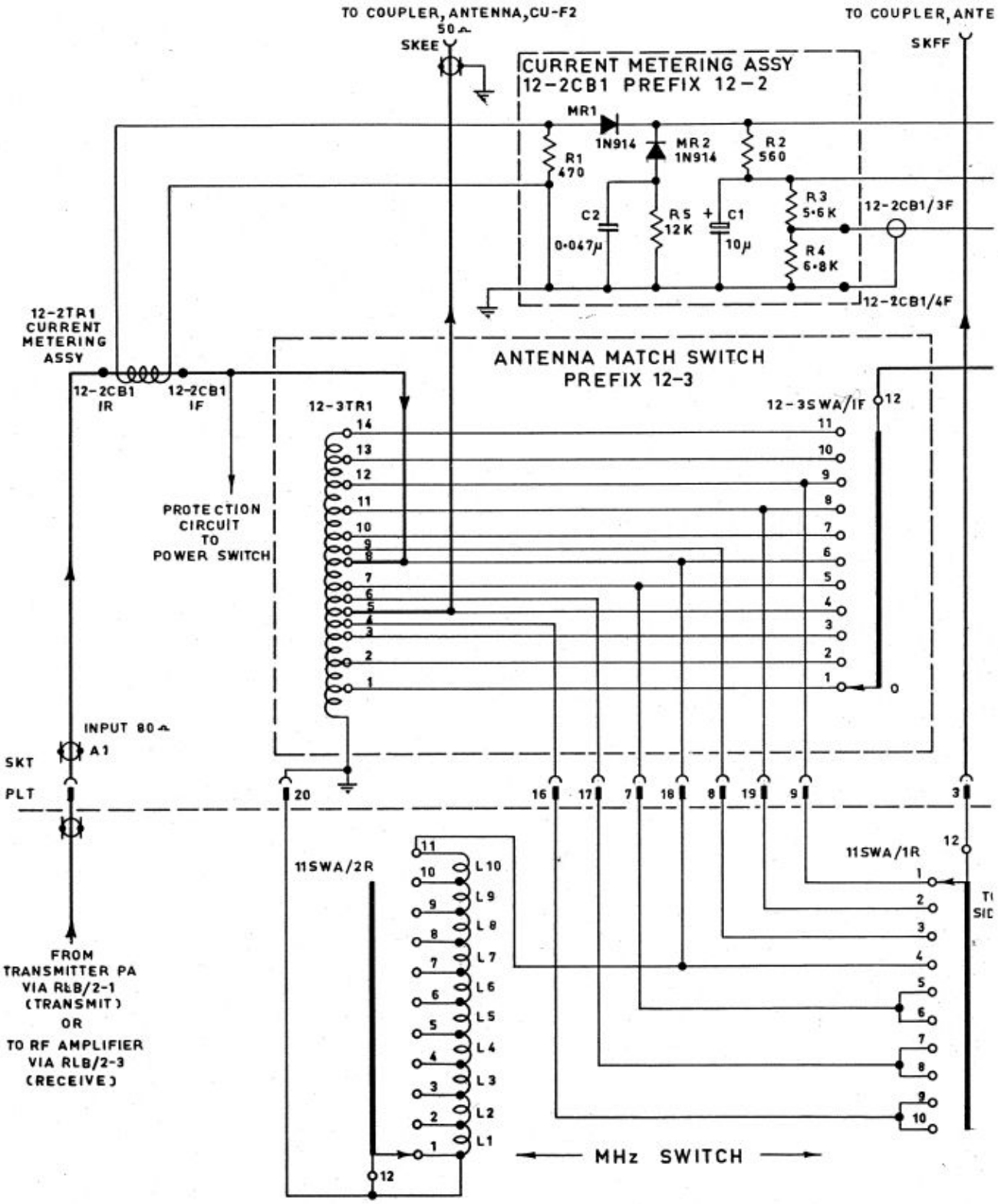

FIG 1005 INTERNAL COU

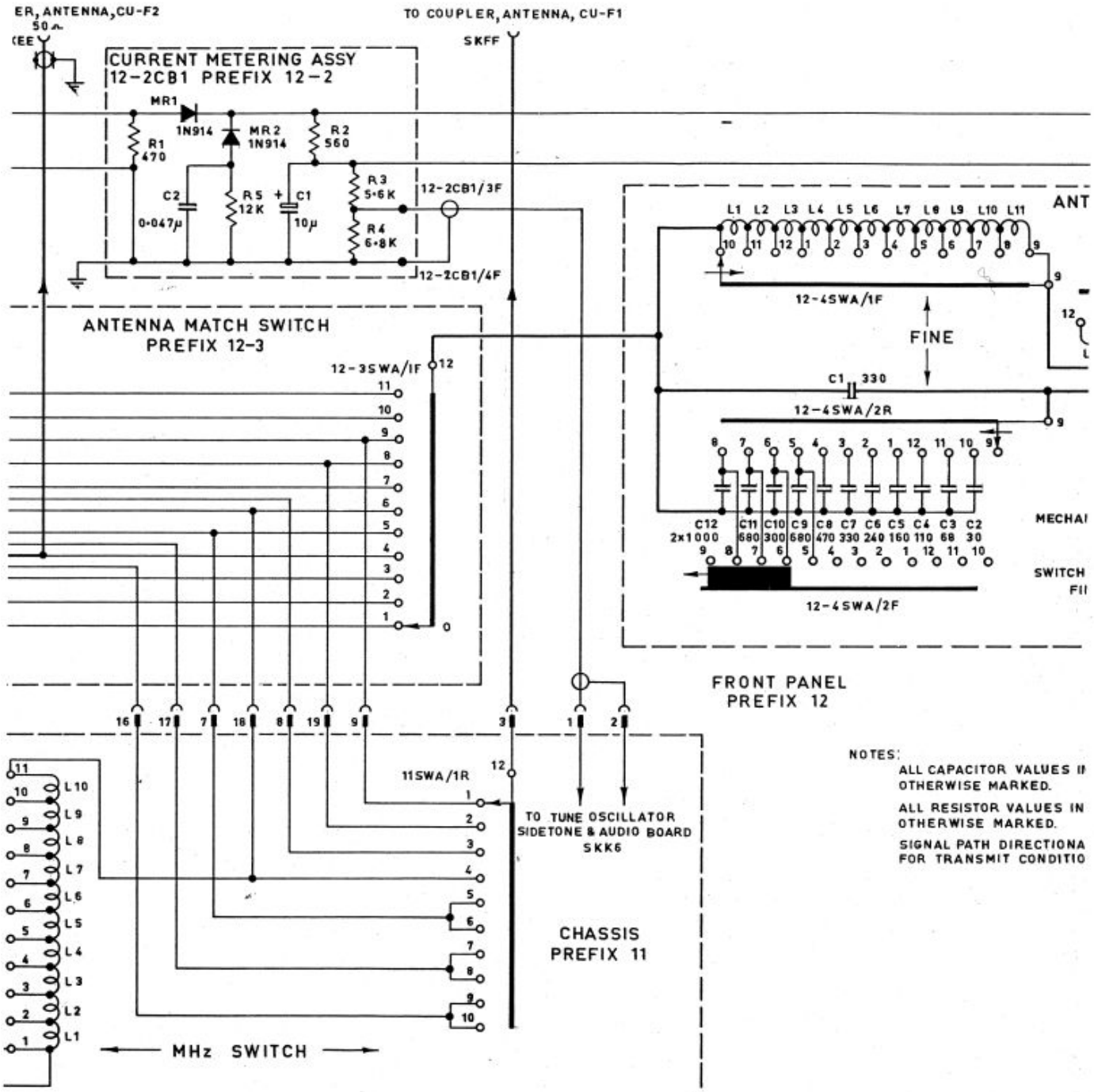

FIG 1005 INTERNAL COUPLING CIRCUIT AND CURRENT METERING ASSEMBLY

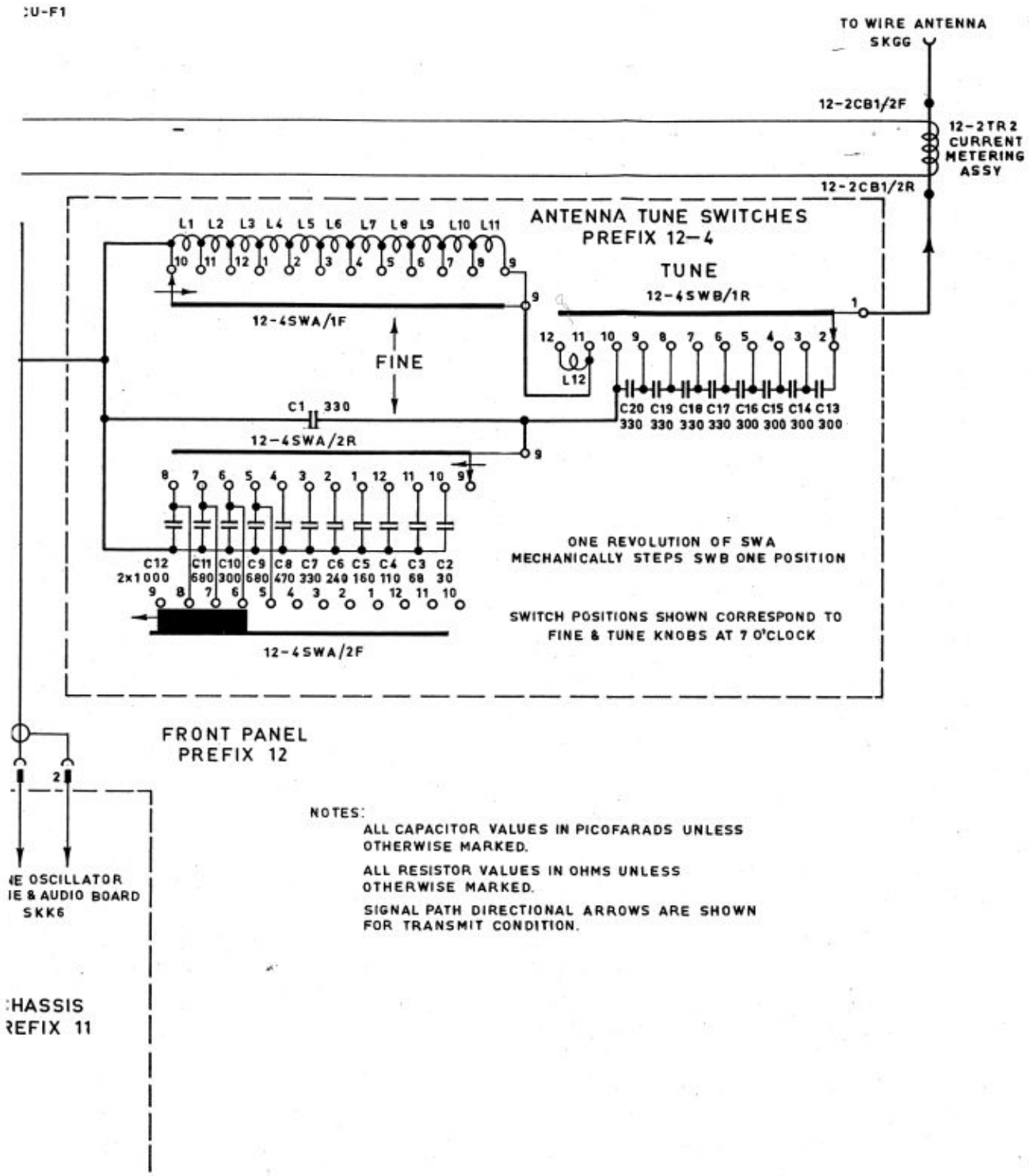
:U-F1
TO WIRE ANTENNA
SKGG
12-2CB1/2F
12-2TR2
CURRENT
METERING
ASSY
12-2CB1/2R
ANTENNA TUNE SWITCHES
PREFIX 12-4
L1 L2 L3 L4 L5 L6 L7 L8 L9 L10 L11
TUNE
12-4SWB/1R
12-4SWA/1F
FINE
L12
C1 330
C20 C19 C18 C17 C16 C15 C14 C13
330 330 330 330 300 300 300 300
12-4SWA/2R
C12 C11 C10 C9 C8 C7 C6 C5 C4 C3 C2
2x1000 680 300 680 470 330 240 160 110 68 30
12-4SWA/2F
ONE REVOLUTION OF SWA
MECHANICALLY STEPS SWB ONE POSITION
SWITCH POSITIONS SHOWN CORRESPOND TO
FINE & TUNE KNOBS AT 7 O'CLOCK
FRONT PANEL
PREFIX 12
NOTES:
ALL CAPACITOR VALUES IN PICOFARADS UNLESS
OTHERWISE MARKED.
ALL RESISTOR VALUES IN OHMS UNLESS
OTHERWISE MARKED.
SIGNAL PATH DIRECTIONAL ARROWS ARE SHOWN
FOR TRANSMIT CONDITION.
IE OSCILLATOR
IE & AUDIO BOARD
SKK6
:HASSIS
REFIX 11

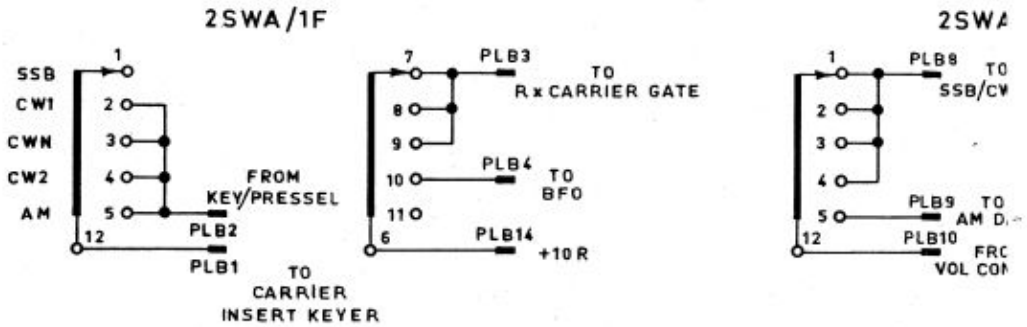
2SWA/1F
SSB
CW1
CWN
CW2
AM
FROM
KEY/PRESSEL
PLB2
PLB1
TO
CARRIER
INSERT KEYER
PLB3
TO
Rx CARRIER GATE
PLB4
TO
BFO
PLB14
+10R
PLB8
PLB9
PLB10

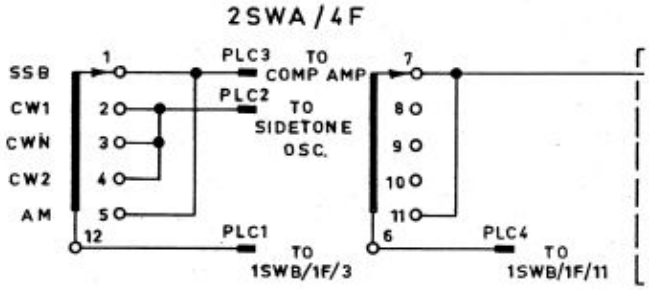
2SWA/4F
SSB
CW1
CWN
CW2
AM
PLC3
TO
COMP AMP
PLC2
TO
SIDETONE
OSC.
PLC1
TO
1SWB/1F/3
PLC4
TO
1SWB/1F/11

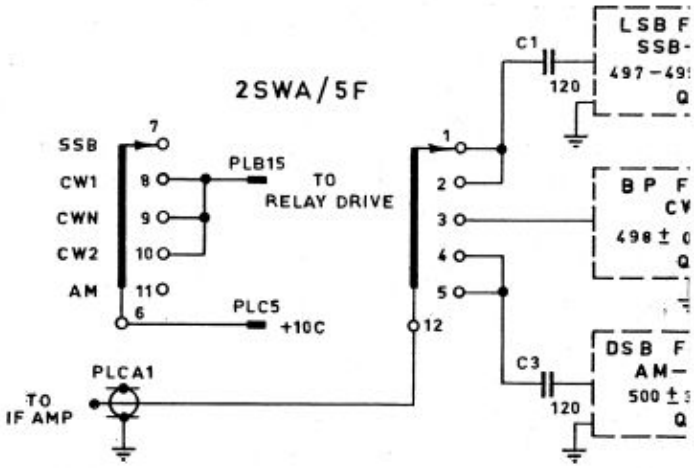
2SWA/5F
SSB
CW1
CWN
CW2
AM
PLB15
TO
RELAY DRIVE
PLC5
+10C
PLCA1
TO
IF AMP
C1
120
C3
120

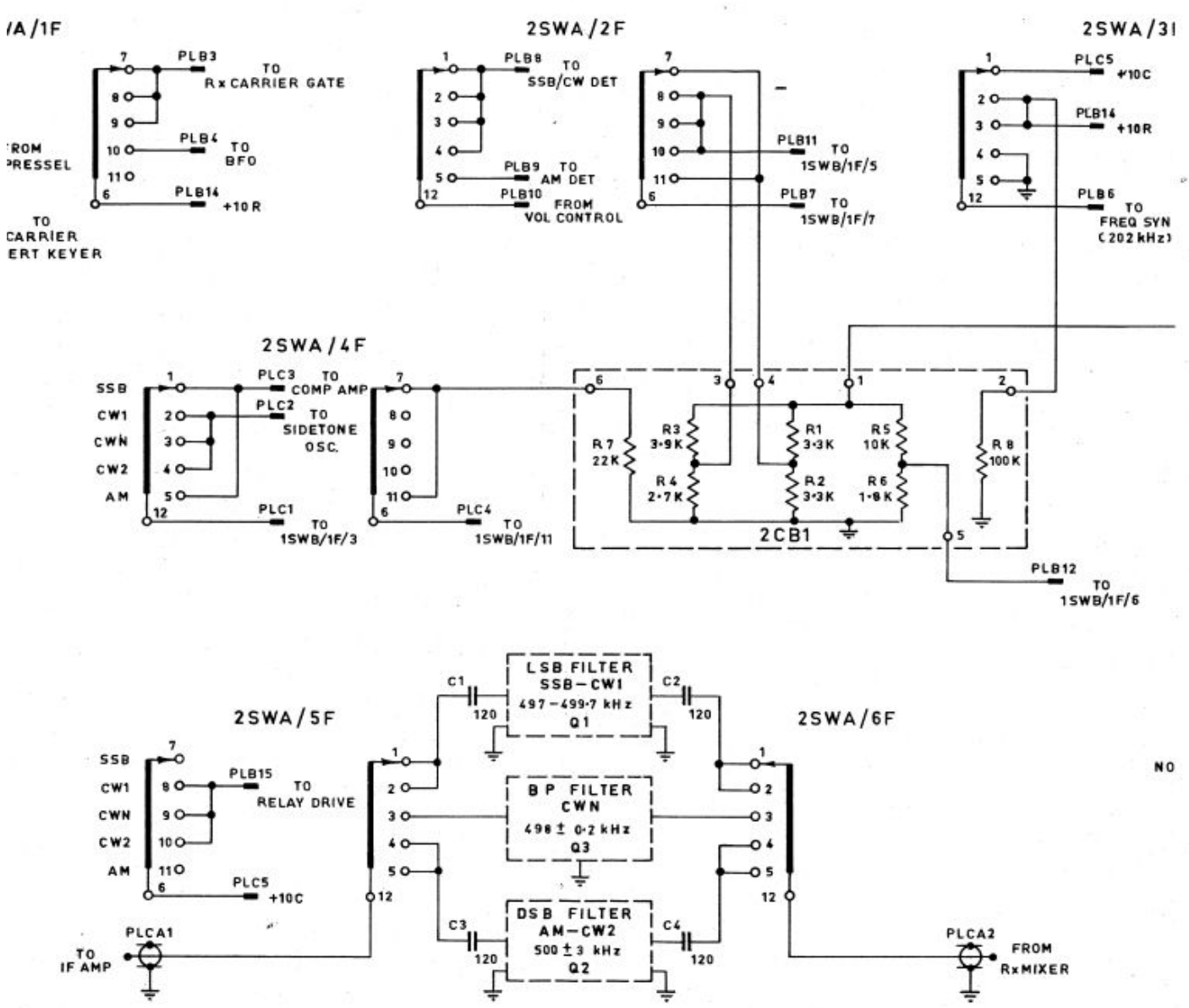

Fig 1006 MODE SWITCH

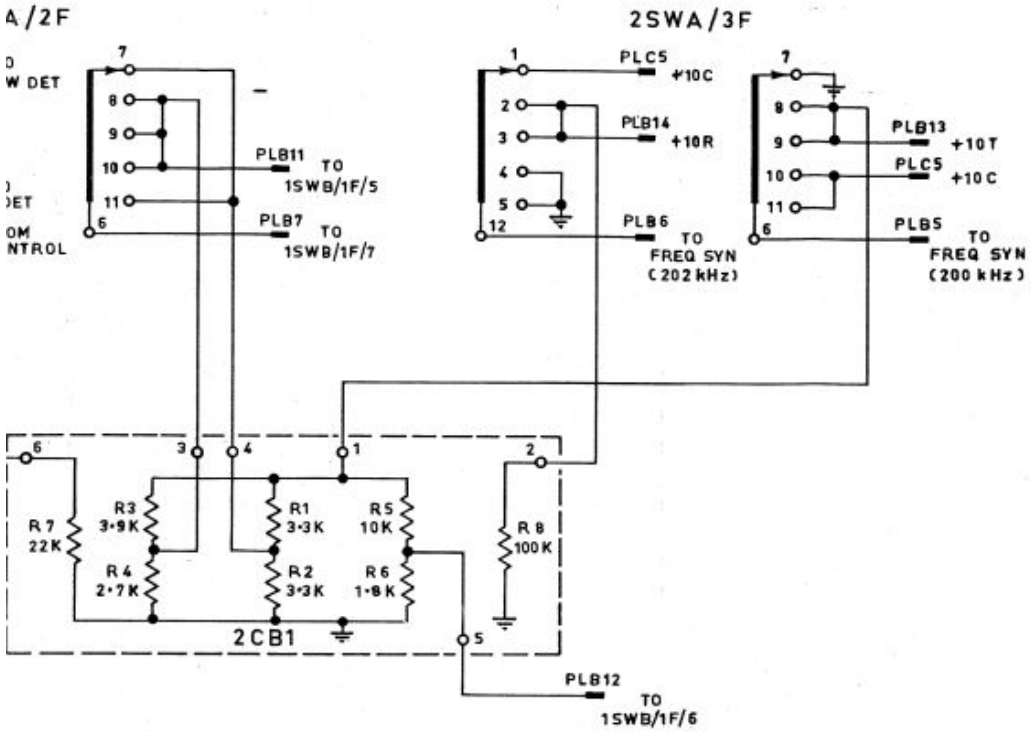

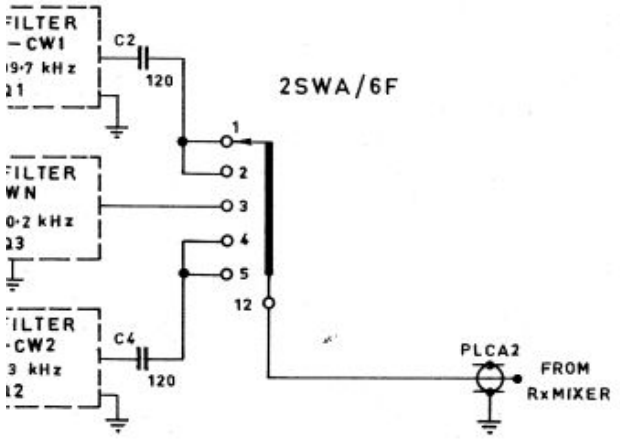

NOTES:
SWA SHOWN IN FULLY ANTI-CLOCKWISE POSITION (SSB)
CIRCUIT PREFIX 2

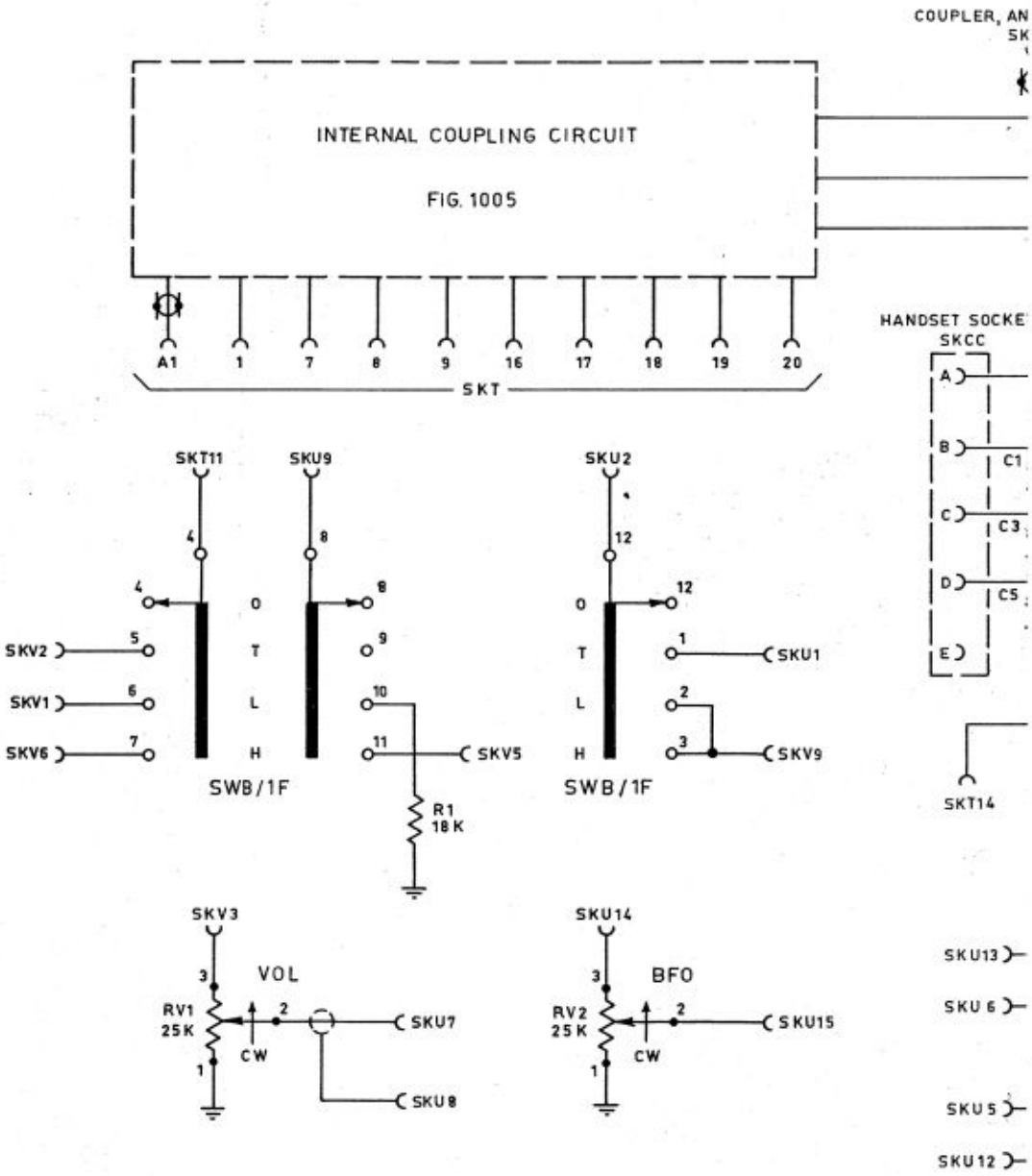
COUPLER, AN
SK
INTERNAL COUPLING CIRCUIT
FIG. 1005
A1
1
7
8
9
16
17
18
19
20
SKT
HANDSET SOCKE
SKCC
A
B
C1
C
C3
D
C5
E
SKT11
SKU9
SKU2
SKV2
SKV1
SKV6
SKV5
SKU1
SKV9
SWB/1F
SWB/1F
R1
18 K
SKT14
SKV3
VOL
RV1
25K
CW
SKU7
SKU8
SKU14
BFO
RV2
25 K
CW
SKU15
SKU13
SKU 6
SKU 5
SKU 12

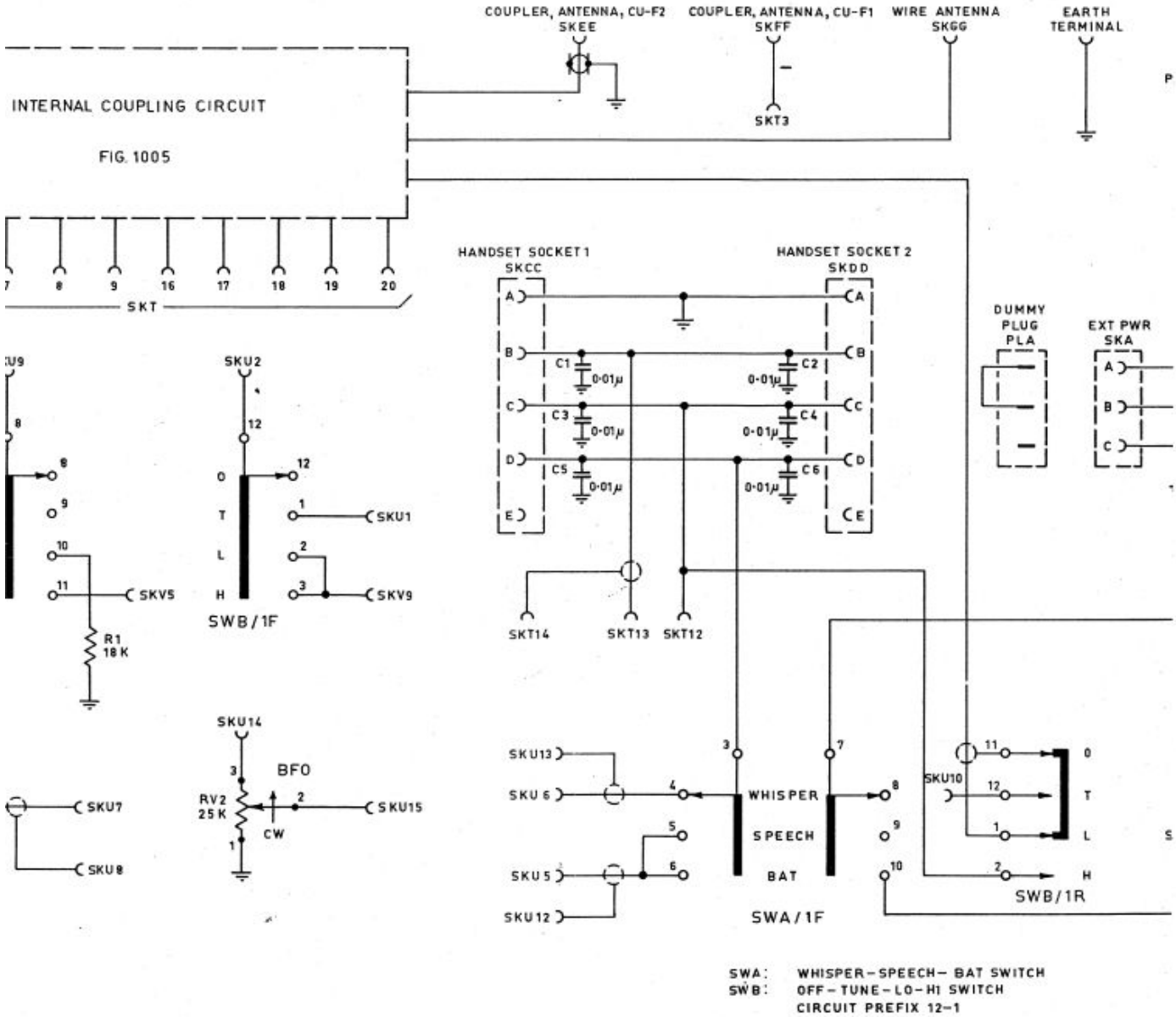

FIG 1007 FRONT PANEL CIRCUIT
END

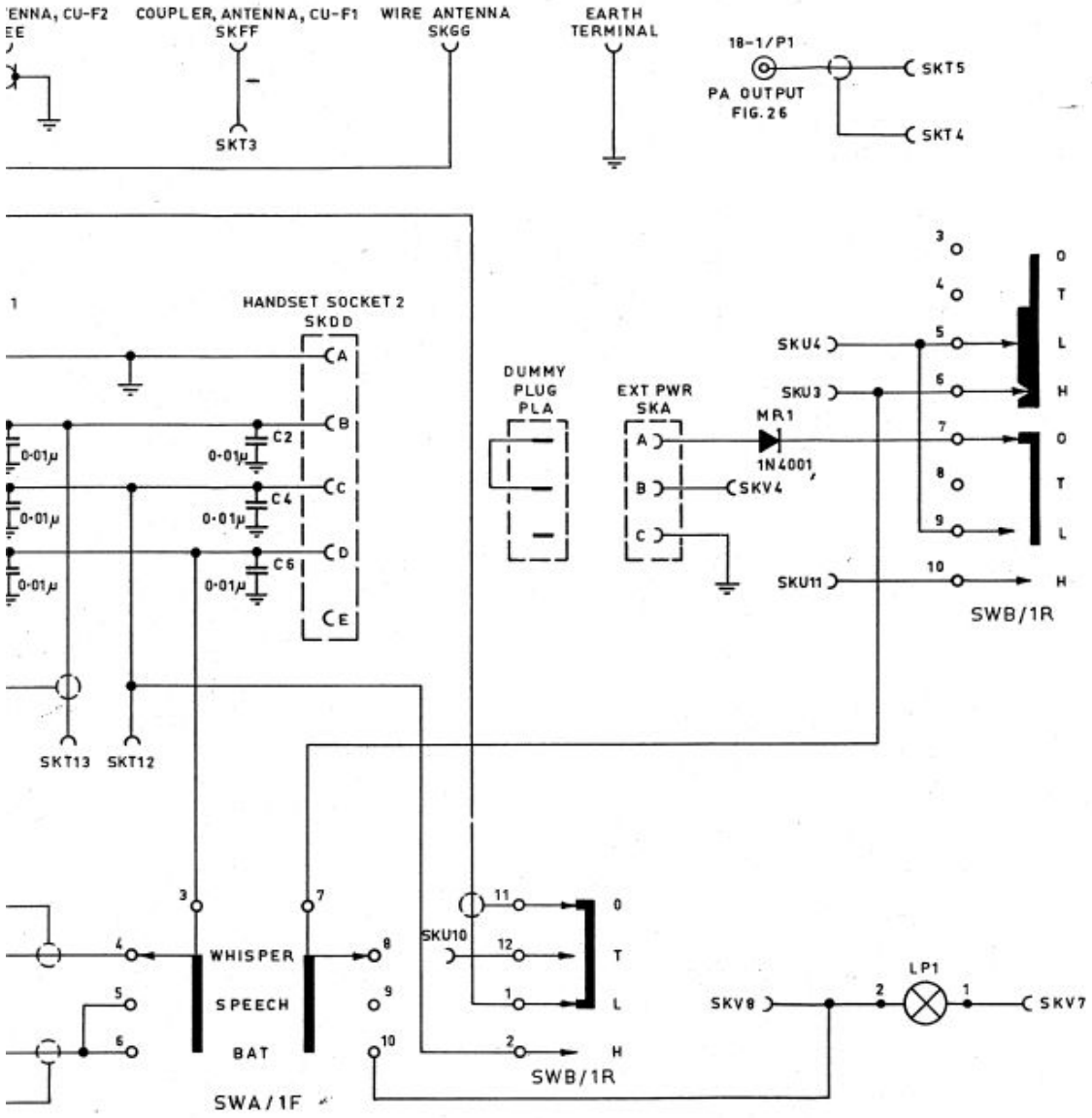

SWA: WHISPER–SPEECH–BAT SWITCH
SWB: OFF–TUNE–LO–HI SWITCH
CIRCUIT PREFIX 12–1

RADIO SET PRC–F1
EQUIPMENT CASE CORROSION – PREVENTIVE MAINTENANCE
UNIT WORK

Introduction

1. Investigation reveals that minor surface damage to the external protective coating of the subject radio set case, a subsequent exposure to damp or salt conditions, will produce accelerated corrosion of the magnesium case material. If c rective action is not taken, case perforation can occur and the internal circuits and components will be subject to corrosi deterioration due to the loss of the sealed environment.

2. This instruction details the preventive maintenance to be carried out by equipment users to reduce the risk of corr effects with Radio Set PRC–F1 equipments.

Preventive Maintenance

3. The following procedures are to be applied by units holding Radio Set PRC–F1 equipments:

a. Warn users to avoid damaging the external protective coating when handling or operating the equipment.

b. Regularly inspect all external surfaces of the receiver – transmitter case, front panel casting and the battery com partment cover for signs of damage ie corrosion pitting, scratches or abrasion which exposes the base metal (PA PAINTING OFFERS NO REAL PROTECTION AGAINST CONTINUED CORROSION – CORRODED AREA REQUIRE SPECIAL WORKSHOP TREATMENT). If damage or corrosion is noted, the equipment is to be sub ted to RAEME for repair.

c. Ensure that the humidity indicator (front panel) is blue before using the equipment. If the indicator is pink, mo ure has entered the sealed compartment and the equipment is to be submitted for RAEME repair.

d. The Battery BB–F1 is to be removed from the equipment whenever the equipment is not intended for function use and before return to storage.

e. Before the battery is installed in the equipment it is to be wiped clean of all residue with a soft cloth and be tho ghly dry. Batteries which exhibit excessive and continual leakage are to be replaced; they must not be used in th equipment.

f. The battery compartment cover is to be cleaned of all residue using a non-metallic brush and cloth, and is to be c before fitting to the equipment. If the battery compartment shows signs of pitting or damage to the sealing lips, equipment is to be submitted for RAEME repair.

Equipment Sealing

4. The receiver – transmitter chassis assembly is enclosed in an air-sealed compartment to prevent moisture ingress. Equipment users are warned not to open this compartment as it will destroy the moisture barrier and can contribute to equipment unreliability. Any internal repair necessary is to be undertaken at RAEME workshops equipped with special dehumidification apparatus.

END