7610—66—086—8347

AUSTRALIAN ARMY

TECHNICAL MANUAL

USER HANDBOOK

5820—66—025—9722 RADIO SET, PRC-F1, 2 - 12 MHz

5820—66—049—7900 RADIO SET, PRC-F3

5820—66—032—0504 RADIO SET, GRC-F2

SPECIFICATION ARMY (AUST) 174

ISSUED APRIL 1975

AUTHORIZED FOR USE WITHIN THE
AUSTRALIAN ARMY BY COMMAND
OF THE MILITARY BOARD.

LOGISTIC COMMAND
ALBERT PARK BARRACKS
MELBOURNE.

(D.R.BEGG)
MAJOR GENERAL
GENERAL OFFICER COMMANDING
LOGISTIC COMMAND.
DELEGATE OF THE
MILITARY BOARD

AMENDMENT RECORD

Amendment No.	Actioned By: Signature and Date

SYNOPSIS

The Radio Sets PRC-F1 and PRC-F3 are short range, low power, lightweight, general purpose, high frequency, single sideband transceivers. Each set with its carrying harness, rechargeable battery and lightweight ancillary items provides a basic manpack radio station. The sets are fully transistorized and are compatible with other high frequency radio sets using single sideband, amplitude modulation and continuous wave modes. They operate in the frequency band 2-12 MHz utilizing digital tuning in 1 kHz steps, and have a nominal peak power output of 10 watts.

The ground station; Radio Set GRC-F2 consists of the manpack PRC-F1 (or F3), together with a collection of items which comprise a Conversion Kit MK-F7.

The Installation Kit, Electronic Equipment, MK-F8 is a general purpose installation kit, that, when used with the manpack PRC-F1 (or F3) and the conversion kit, enables the set to be installed in, and operated from, a variety of vehicles and small craft.

CONTENTS

LIST OF ILLUSTRATIONS

LIST OF ILLUSTRATIONS CONT.

LIST OF TABLES

ASSOCIATED PUBLICATIONS

7610-66-029-5014 User Handbook - Regulator Set, MX-F1.

TM 11-5835-224-12 Operator and Organizational Maintenance Manual Coder - Burst Transmission Group AN/GRA-71.

Notes for Operators - Regimental Radio Equipment.

A Field Guide to Simple High Frequency Dipoles - Stanford Research Institute.

Complete Equipment Schedules (CES) No:

a. 4090 - Radio Set, PRC-F1.

b. 4468 - Radio Set, PRC-F3.

c. 4091 - Conversion Kit, MK-F7.

d. 4089 - Installation Kit, Electronic Equipment, MK-F8.

Electrical and Mechanical Engineering Instructions (EMEI) No:

a. Tels F570 to 579 Series. Receiver-Transmitter, Radio, RT-F1/PRC.

b. Tels L130 to 139 Series. Coupler Antennae, CU-F2.

c. Tels K570 to 579 Series. Power Supply, PP-F1.

d. Tels K560 to 569 Series. Regulator, Battery Charger, F1.

FIG 1
RADIO SET PRC-F1 (or F3) SHOWING
SIDE MOUNTED COUPLER ANTENNA CU-F1A1

FIG 2
RADIO SET PRC-F1 SHOWING
TOP MOUNTED COUPLER ANTENNA CU-F1

CHAPTER ONE
GENERAL DESCRIPTION

SECTION 1
GENERAL

1. This handbook describes:

   a. Radio Set, PRC-F1,

   b. Radio Set, PRC-F3,

   c. Radio Set, GRC-F2,

   d. Conversion Kit, MK-F7, and

   e. Installation Kit, Electronic Equipment, MK-F8.

2. It contains operating instructions for the manpack and ground station roles including the use of the various antennae, charging of the battery and user inspection and servicing of the equipments. The procedures to be followed for unpacking, packing, and setting up the equipment, and its installation in vehicles or small craft are also included.

SECTION 2
DESCRIPTION OF MAIN FEATURES

Radio Set, PRC-F1 and PRC-F3

3. These sets are outwardly identical in appearance. They are low powered, short range, simplex transceivers with facilities for communication by speech, using single sideband (SSB) or amplitude modulation (AM), or by morse code. The transceiver of the PRC-F3 is an improved version and provides an additional facility for high speed burst keying when used with the Coder Burst, Transmission Group, AN/GRA-71. The sets are compatible with other types of equipment provided with similar facilities and of comparable frequency accuracy.

4. Each set is intended primarily as a manpack station, using a flexible antenna and an internal, rechargeable, secondary battery. An adjustable dipole antenna is provided for use when the set is used as a temporary ground station.

Radio Set, GRC-F2

5. The Radio Set, GRC-F2 consists of a Radio Set, PRC-F1 (or F3) together with a Conversion Kit, MK-F7. This kit includes an external antenna coupler and two end fed wire antennae. The PRC-F1 (or F3) itself may be used as a ground station with a limited range of antennae, but the antenna coupler supplied in the conversion kit affords greater flexibility by allowing the choice of a wider range of antennae, and provides efficient coupling between these antennae and the transceiver. The Radio Set, GRC-F2 can be used as a fixed base or control station for interworking with PRC-F1 (or F3) manpack stations.

Installation Kit, Electronic Equipment, MK-F8

6. This kit includes a power supply, vertical whip antenna, shock mounting bases and mounting hardware, and the necessary cables for installation of the Radio Set, GRC-F2 in vehicles or small craft. It can be used in conjunction with a suitable power source to provide a more permanent ground station than the GRC-F2 by itself, in that the three major units (transceiver, antenna coupler, and power supply) can be mounted together on the shock mounting base as for a vehicle installation.

SECTION 3
DATA SUMMARY

Transceiver

7.	Frequency	1000 to 11 999 kHz in steps of 1 kHz.
	Number of channels	10 000
	Frequency stability	± 25 Hz between -21°C and 71°C for a period of 90 days.
	Mode of Operation:	
	SSB	Upper sideband speech communication.
	CW1	Equivalent to 2 kHz tone telegraphy over SSB channel.
	CWN	425 Hz bandwidth on receive with the receiver output a fixed beat note of 2 kHz.
	CW2	6 kHz receiver bandwidth and variable frequency BFO.
	AM	6 kHz bandwidth. Compatible AM transmission, normal AM reception.

NOTE

The indicated frequency is carrier frequency for AM and CW2 modes. For other modes the indicated frequency is 2 kHz above the suppressed carrier frequency (ie, the centre of the radiated band).

High Speed Keying (This facility is provided on the Radio Set PRC-F3 only)	Up to 300 words per minute when used with Coder Burst Transmission Group AN/GRA-71.
Transmitter Output:	
High power	10 W pep on SSB or compatible AM 5 W pep on CW
Low power	1 W pep on all modes
Receiver Sensitivity:	
SSB and CW	0.5 uV in series with 50 ohms for 1 mW audio output in 100 ohms 2 uV in series with 50 ohms 30% modulated for 1 mW audio output in 100 ohms.
Power Required	28 Vdc supplied by internal rechargeable nickel cadmium battery.
Endurance on Internal Battery for Receive-Transmit Ratio of 10:1	High power, 6 hours Low power, 24 hours

8. Coupler, Antenna, CU-F2

(Item of Conversion Kit, MK-F7)

Connection to transceiver	50 ohms unbalanced
Connection to antenna	Balanced or unbalanced
Matching	Will match the transceiver 50 ohms output to antennae with impedances between 5 and 7 000 ohms.

9. Power Supply, PP-F1

(Item of Installation Kit, Electronic Equipment MK-F8)

Input	20 V to 40 V with no superimposed ripple on the input, or 20 V to 40 V mean input with 2 Vp-p of superimposed ripple at a frequency of 500 Hz to 5 kHz, or a nominally 24 Vdc battery

bank or vehicle battery with negative earth, or a nominally 24 Vdc vehicle generator with negative earth and float battery.

Output

A regulated output of +27.5 V ± 0.5 V, with ripple less than 0.25 Vp-p, to power the transceiver. A regulated current of 100 mA or 20 mA as selected by the switch. The current is regulated to better than ± 5% and is used to charge the PRC-F1 internal battery.

10. Dimensions and Mass

Serial	Equipment	mm	kg
1	Radio Set PRC-F1 (or F3) stowed in Case Assembly, Transit, CY-F1 or CY-F1A1	603 x 463 x 330	38
2	Conversion Kit, MK-F7 Stowed in Case Assembly, Transit, CY-F2	463 x 387 x 254	17
3	Installation Kit, Electronic Equipment MK-F8. Shipped in wooden container.	530 x 690 x 1140	57
4	Battery Storage, BB-F1	216 x 102 x 27	0.9

CAUTION

The Receiver-Transmitter, Radio RT-F1/PRC and RT-F2/PRC, the Coupler, Antenna, CU-F2 and the Power Supply PP-F1 are housed in panclimatically sealed cases and must NOT be opened by the operator under any circumstances.

SECTION 4

COMPONENTS OF RADIO SETS PRC-F1 AND PRC-F3

General

11. A metal transit case (see Fig 8) is provided for transporting the complete station. On receipt the case contains the appropriate items listed in Table 1 with the exception of the batteries which are separately demandable. For the correct Defence Stock Numbers of the items listed refer to Complete Equipment Schedules (CES) No 4090 and 4462 for the Radio Sets PRC-F1 and F3 respectively.

TABLE 1- COMPONENTS OF RADIO SETS PRC-F1 AND PRC-F3

Serial	Designation	Qty		Ref Fig No
		PRC-F1	PRC-F3	
1	ANTENNA, AS-F1 8 section 8 ft	2	2	3
2	ANTENNA, AS-F2	2	2	4
3	ANTENNA FEEDER ASSEMBLY, 80 ohms	1	1	5
4	BAG, ACCESSORY CW-F2	2	2	6
5	BATTERY, STORAGE, BB-F1	6	6	7
6	CASE ASSEMBLY, TRANSIT CY-F1	1	-	8
7	CASE ASSEMBLY TRANSIT CY-F1A1	-	1	-
8	CORD, AERIAL, WEIGHTED, 100 ft	1	1	9
9	COUPLER ANTENNA CU-F1	1	-	10
	OR			
10	COUPLER ANTENNA CU-F1A1	1	1	11
11	COUNTERPOISE ANTENNA	1	1	12
12	HANDSET, H-F2	1	1	13
13	HARNESS, ELECTRICAL EQUIPMENT ST-F1	1	1	14
14	HEADSET, ELECTRICAL light weight, H-F1	1	1	15
15	KEY TELEGRAPH, lightweight, KY-F1A1	1	1	16
16	MICROPHONE, DYNAMIC, M-F1	1	1	17
17	OPERATING PROCEDURE FOR RADIO SETS PRC-F1 AND RADIO SET GRC-F2	1	1	-
18	RECEIVER-TRANSMITTER, RADIO RT-F1/PRC	1	-	18
19	RECEIVER-TRANSMITTER RADIO RT-F2/PRC-F3	-	1	-
20	USER HANDBOOK RADIO SETS PRC-F1 AND PRC-F3	1	1	-

Description of Components

12. Antenna, AS-F1. (Fig 3). This is a vertical flexible antenna 2.4 m long. It consists of eight sections of steel tubing, each section fitting into the flared end of the next section. A nylon cord is threaded through the sections to facilitate assembly and prevent loss of sections.

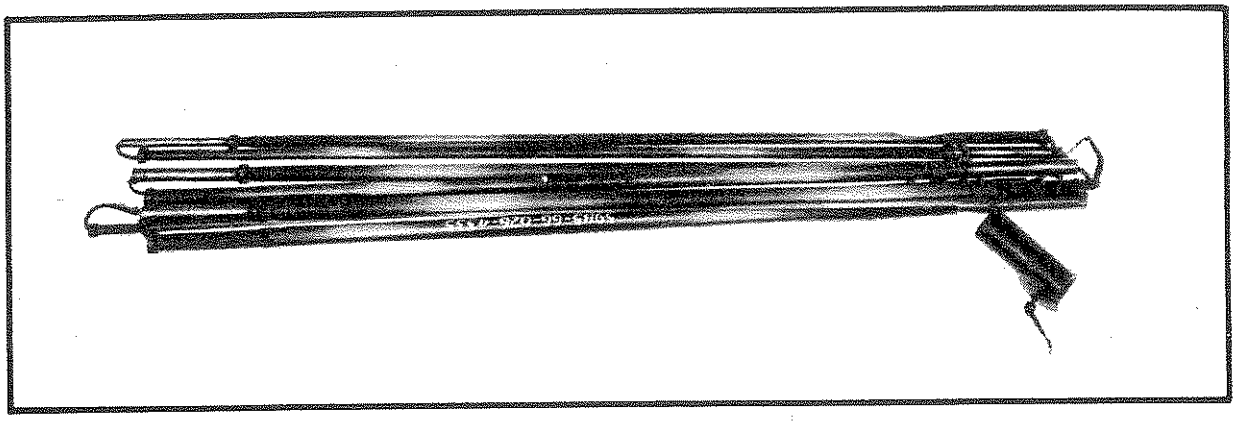

FIG 3
ANTENNA, AS-F1

13. Antenna, AS-F2. (Fig 4). This is an adjustable wire antenna; two of which make up the radiating element of a dipole antenna. The wire is wound on a light metal spool and is marked at approximately 30 cm (1 ft) intervals with red beads, and at approximately 3 m (10 ft) intervals with yellow beads. The spool is fitted with two sliding captive insulators, and two hinged metal flaps which are secured with a spring catch. The inside faces of the flaps show the method of erection and the length of wire to be wound off the spool for a given frequency.

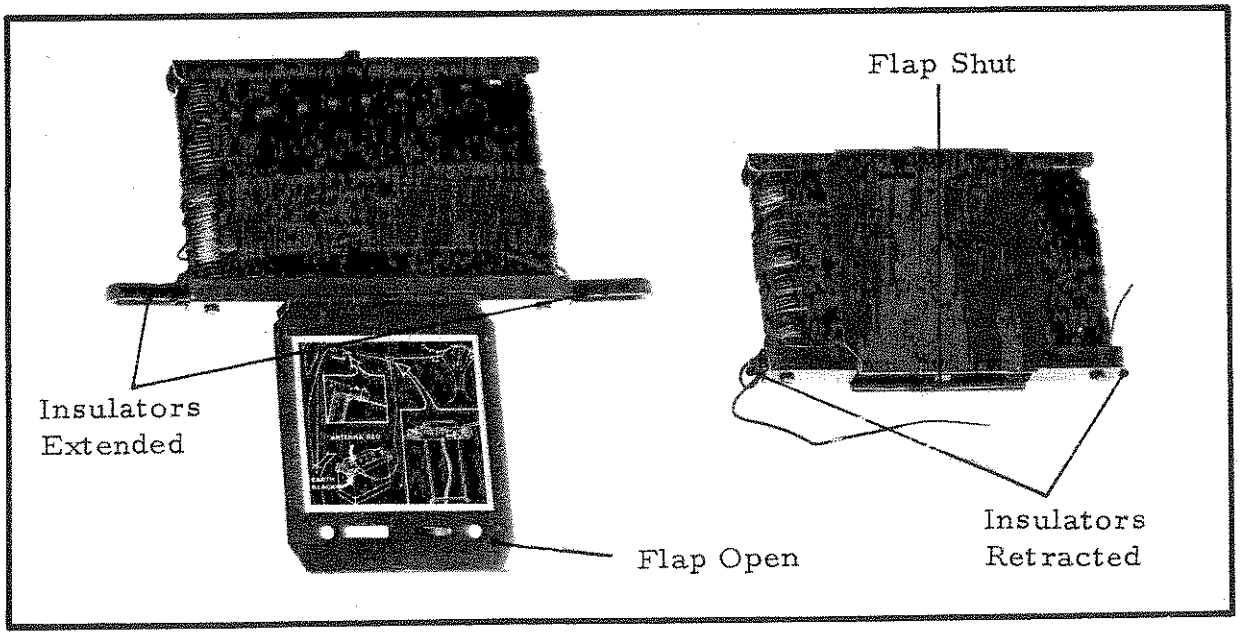

FIG 4
ANTENNA, AS-F2

14. Antenna Feeder Assembly, 70 Ohm. (Fig 5). This assembly and two half dipoles (Antenna, AS-F2) form a dipole antenna. The assembly consists of a wire frame on to which is wound a length of twin down (feeder) lead. The two terminals carried on an insulating bar at the top of the frame are provided for connection of the free end of each half dipole.

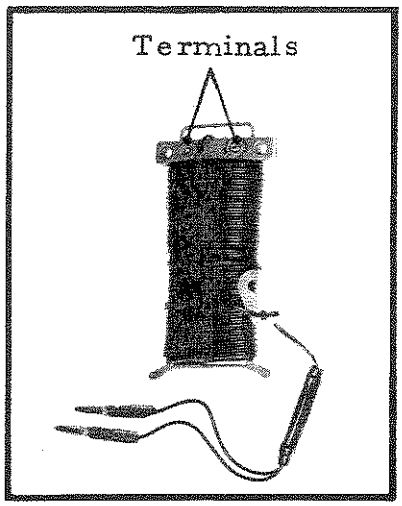

FIG 5
ANTENNA FEEDER ASSEMBLY 70 OHM

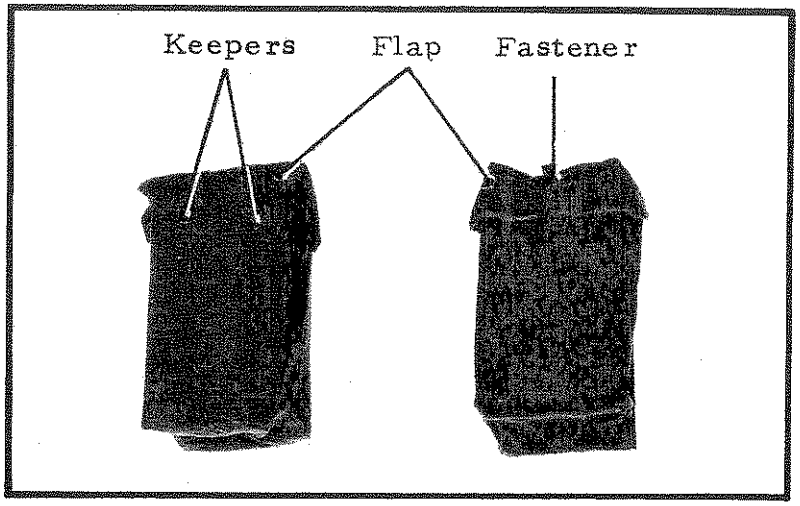

FIG 6
BAG, ACCESSORY, CW-F2

15. Bag, Accessory, CW-F2. (Fig 6). These webbing bags are provided for the carriage of accessories when the equipment is being used in the manpack role. Each bag has a flap type closure and fastener and is attached to the Harness Assembly ST-F1 by passing the harness restraining straps under the keepers sewn to the back of the bags.

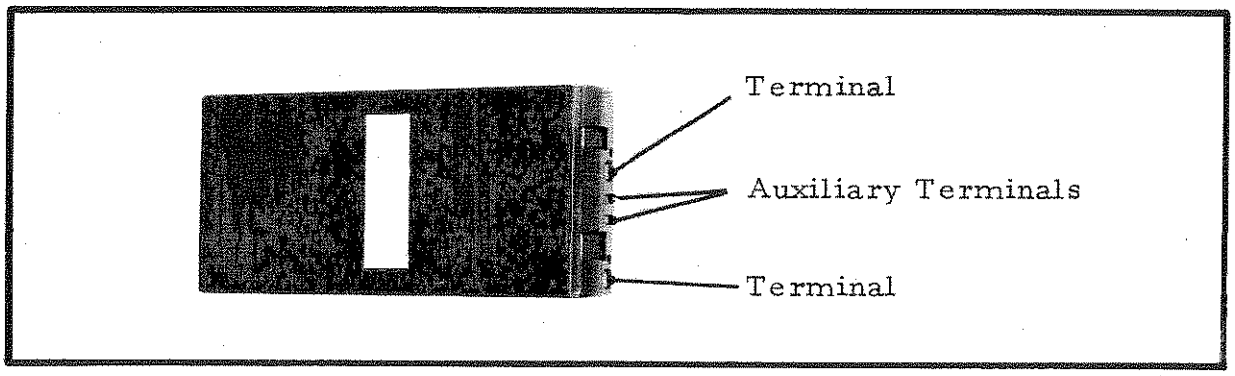

FIG 7
BATTERY STORAGE, BB-F1

16. Battery, Storage, BB-F1. (Fig 7). This battery has a nominal voltage of 24 volts. It consists of 22 nickel cadmium cells connected in series and enclosed in a plastic insulating case. The shape of the case prevents the battery from being inserted with incorrect polarity. The two terminals are circular studs, asymmetrically placed, on one end of the battery. Two rectangular auxiliary terminals (if fitted), provide a thermal sensing facility which will enable the possible future application of a rapid charging technique.

17. Case Assembly, Transit CY-F1. (Fig 8). This metal case has an airtight lid secured by eight spring catches and is fitted with two carrying handles. The case and the lid are partitioned to stow all components of the Radio Set, PRC-F1 (or F3). The two compartments in the lid are covered by a common hinged flap which is secured by two quarter turn fasteners. The flap bears a plate showing stowage details of the components.

18. Case Assembly, Transit CY-F1A1. This case will accept either radio set and differs from the Case CY-F1 only in that the internal padding has been slightly rearranged.

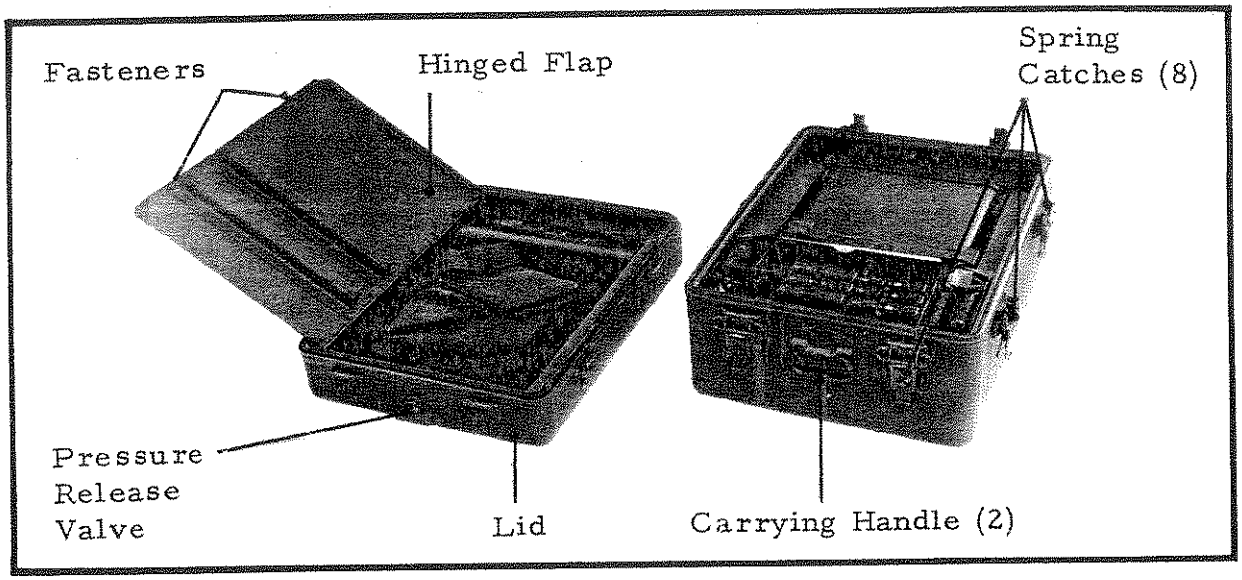

FIG 8
CASE ASSEMBLY, TRANSIT, CY-F1

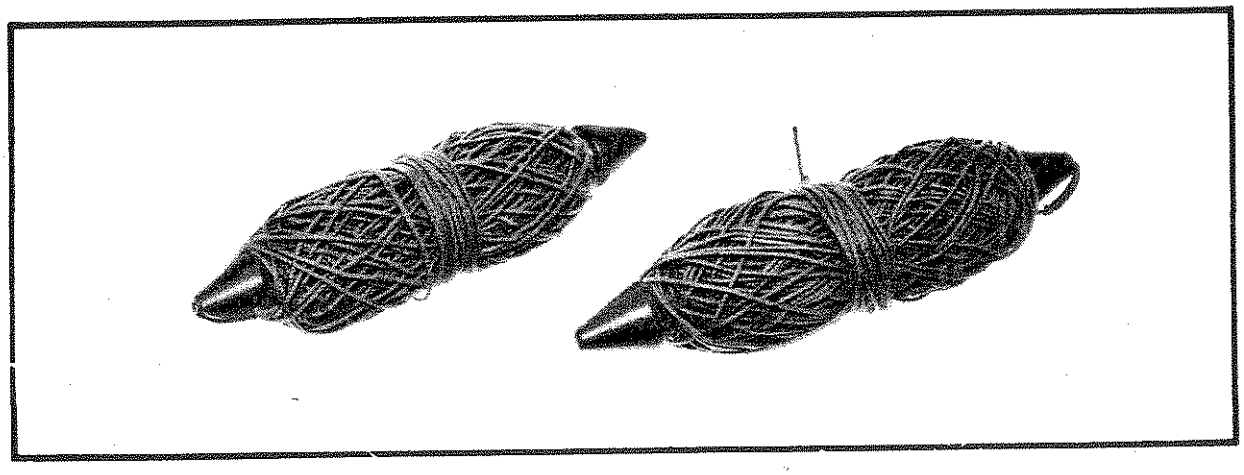

FIG 9
CORD AERIAL WEIGHTED

19. Cord Aerial, Weighted. (Fig 9). The device consists of a metal bobbin with 30 m of nylon cord wound onto it, one end of the cord being attached to the bobbin. It is used in the erection of wire antennae.

20. Coupler, Antenna, CU-F1. (Fig 10A). This coupler connects the vertical flexible antenna (AS-F1) to the transceiver. It consists of a cylindrical case housing a loading inductor, a screwed collet at the top to secure the antenna, a barrel spring at the bottom to provide flexibility, and a screwed plug which fits into the antenna receptacle on the transceiver. The loading inductor is tuned by a small knob on the coupler which is accessible to the operator during manpack operation. This coupler is provided with Radio Sets PRC-F1 but can be used on the receiver-transmitter of the Radio Set PRC-F3.

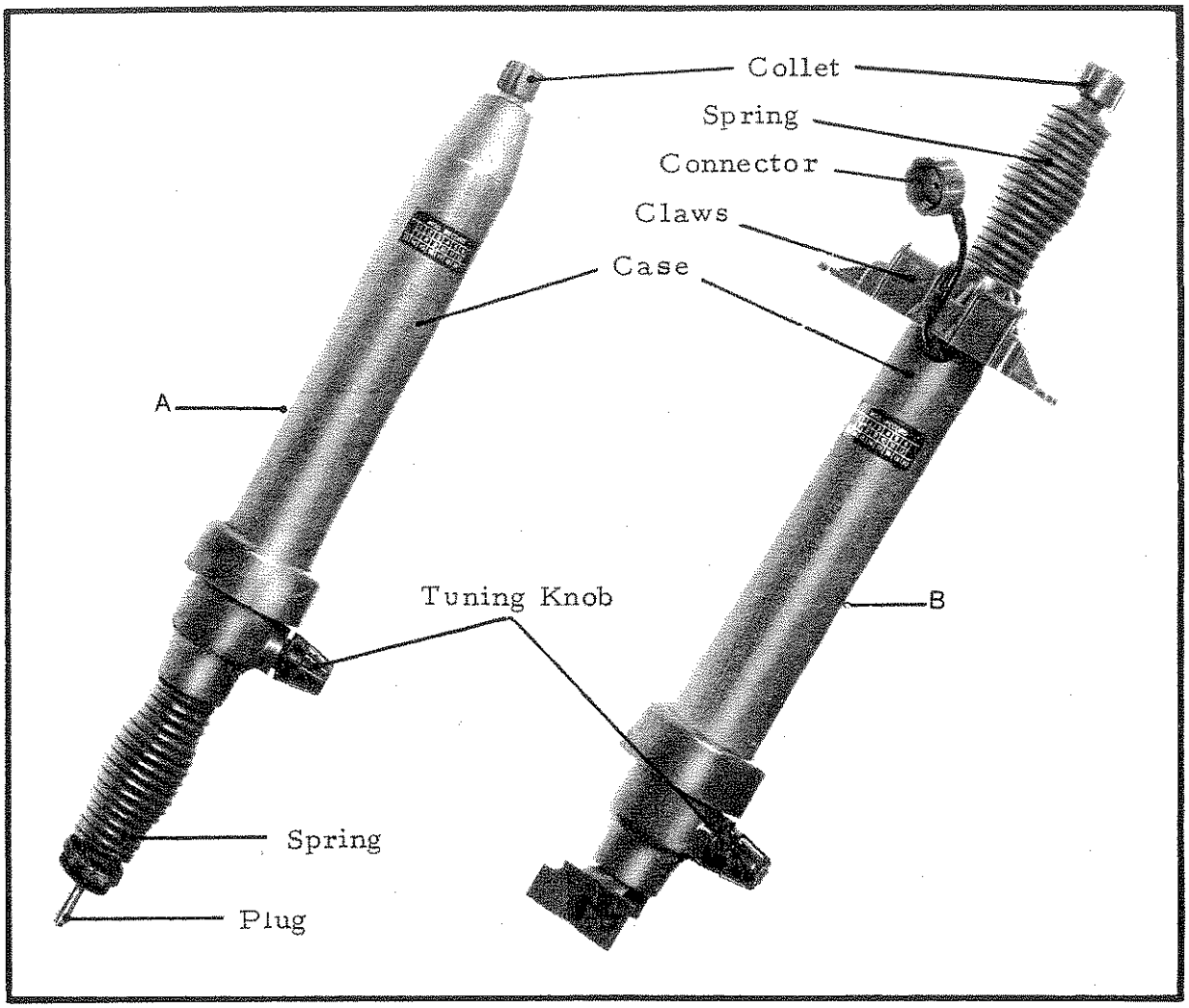

FIG 10
COUPLER ANTENNA: A - CU-F1
B - CU-F1A1

21. Coupler, Antenna, CU-F1A1. (Fig 10B). This coupler differs from the Coupler, Antenna, CU-F1 only in that it is mechanically attached to the transceiver by means of the claws on the coupler engaging the carrying handle on the top of the transceiver and then being secured in position by the battery compartment lid retaining catches. The coupler is electrically connected to the antenna receptacle of the transceiver by a cable integral with the coupler. The Couplers, Antenna, CU-F1 and CU-F1A1 are interchangeable and either can be used with the Radio Set PRC-F1 or F3.

22. Counterpoise, Antenna. (Fig 11). This consists of a metal spike to which are attached four black wires each 3 m long, and one green wire 60 cm long. In use the spike is driven into the ground, the four black wires are laid out in the form of a cross and the green wire is connected to the earth terminal of the transceiver or the Coupler, Antenna, CU-F2. Do not use the counterpoise with a dipole antenna.

23. Handset, H-F2. (Fig 12). This lightweight handset is fitted with a pressel (press to talk) switch in the handle, a dynamic microphone and receiver, and a connecting cable to which is attached a five pin connector.

24. Harness Assembly, ST-F1. (Fig 13). This assembly (together with the two Bags Accessory) is designed for the carriage of all components of the equipment used in the manpack role. The transceiver is positioned in, and secured to the assembly by means of metal clamps and webbing retaining straps provided on the assembly.

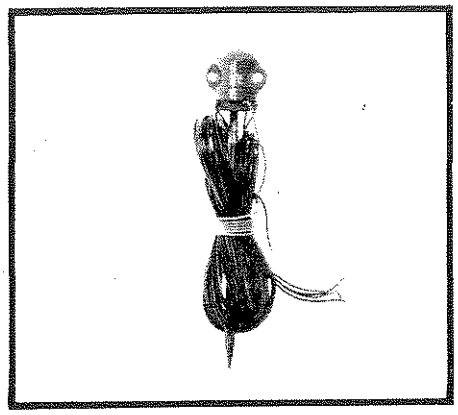

FIG 11
COUNTERPOISE
ANTENNA

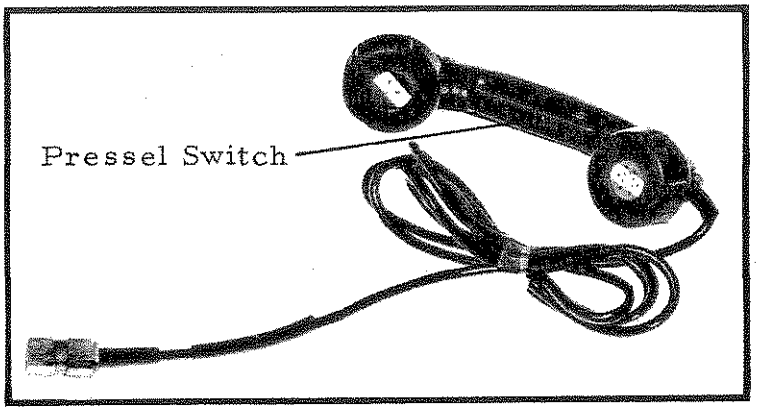

FIG 12
HANDSET, H-F2

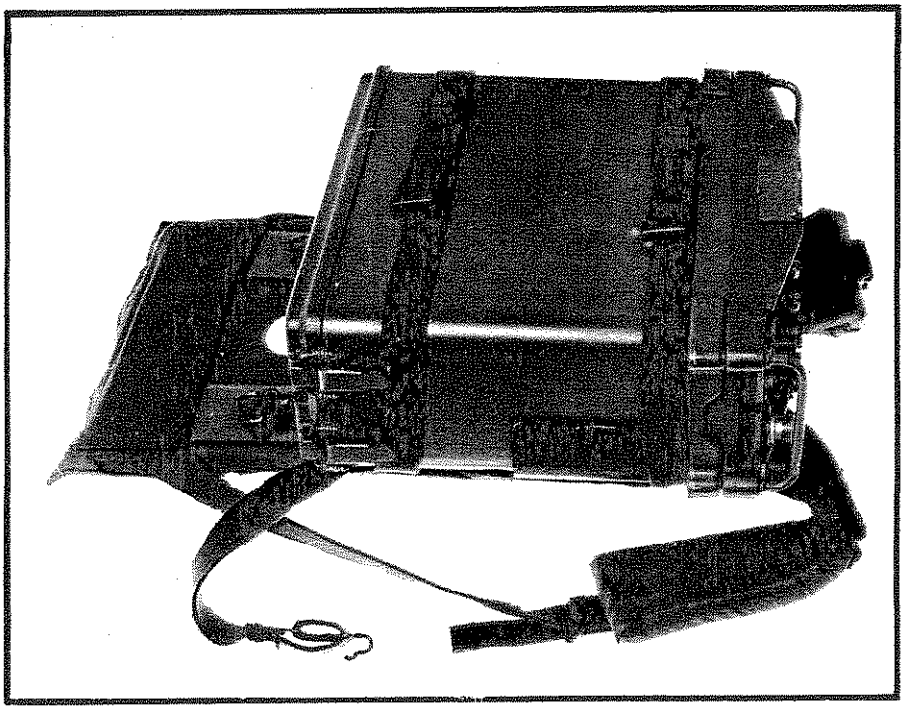

FIG 13
HARNESS
ASSEMBLY, ST-F1
(With Receiver-
Transmitter
fitted)

25. Headset, H-F1. (Fig 14). This is a lightweight, plastic encapsulated single ear-piece unit which fits into the ear of the operator. It includes an integral cable and connector which plugs into an adapter on the microphone connector.

26. Key, Telegraph, Lightweight (KY-F1A1). (Fig 15). This is a sealed (non-adjustable) key fitted with an integral cable and five pin connector. Grooves on the base of the key, and a guideway on the top of the transceiver enable the key to be attached to the transceiver.

27. Microphone, Dynamic, M-F1. (FIG 16) This hand microphone is fitted with a pressel switch at the side, and an integral retractile cable and connector. The connector incorporates an adapter for connection of the Headset, H-F1 (see para 25 and Fig 14B).

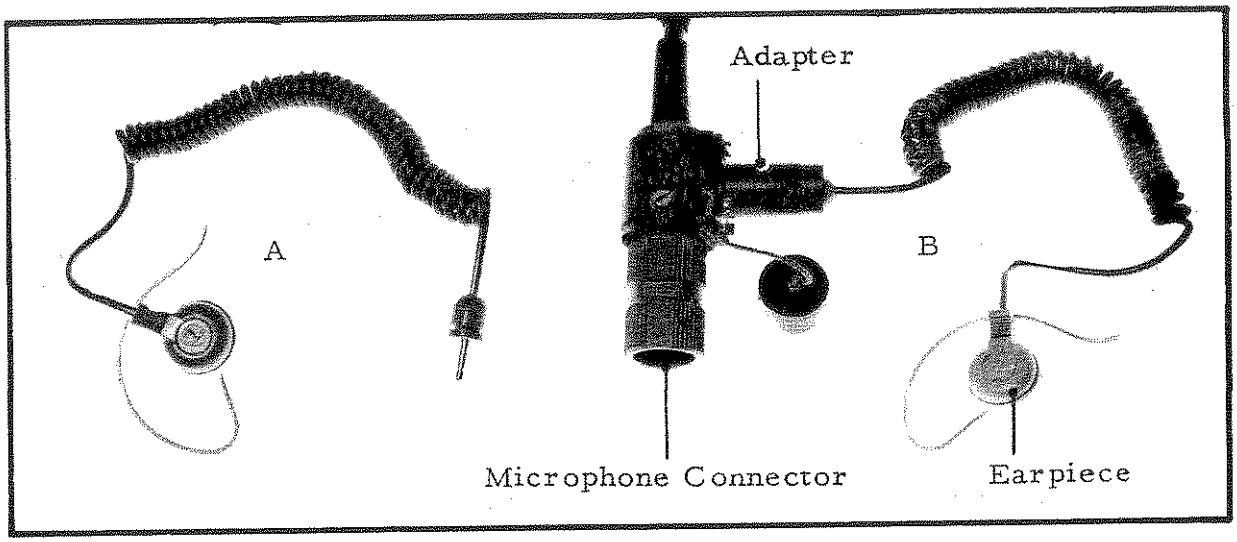

FIG 14
A - HEADSET, H-F1
B - CLOSE UP SHOWING HEADSET CONNECTED TO ADAPTER

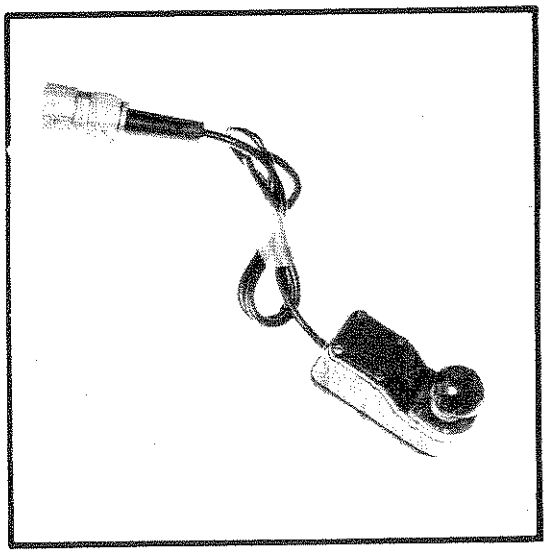

FIG 15
KEY, TELEGRAPH
LIGHTWEIGHT, KY-F1A1

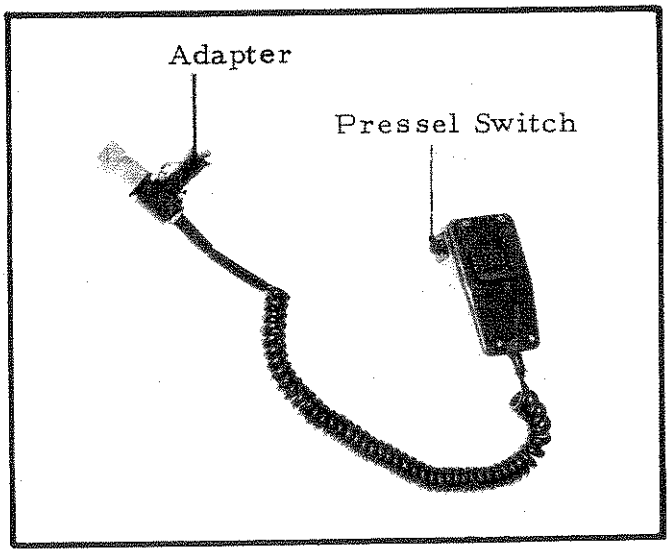

FIG 16
MICROPHONE DYNAMIC, M-F1

28. Receiver-Transmitter, Radio RT-F1/PRC. (Fig 17). This transceiver is a compact, lightweight unit, housed in a case of magnesium alloy. The case is panclimatically sealed by a rubber gasket between the front panel and the main body, the two assemblies being held together by a captive screw at each of the four corners. The battery is carried in a separate compartment on the rear of the case. The lid of the case is secured by four spring catches which facilitate rapid replacement of the battery in the field.

29. Receiver-Transmitter, Radio RT-F2/PRC-F3. This transceiver is identical to the RT-F1/PRC in outward appearance. It incorporates internal circuit changes, by way of product improvement. The transceiver can be distinguished by:

a. the nameplate on the transceiver bearing the designation Receiver-Transmitter, Radio, RT-F2/PRC-F3, and

b. a serial number of 2000 or higher.

30. The transceiver can be used with the Coder, Burst Transmission, AN/GRA-71 and the NAGRA Tape Recorder to provide a burst keying and receiving facility (not provided on the Receiver-Transmitter, Radio, RT-F1/PRC).

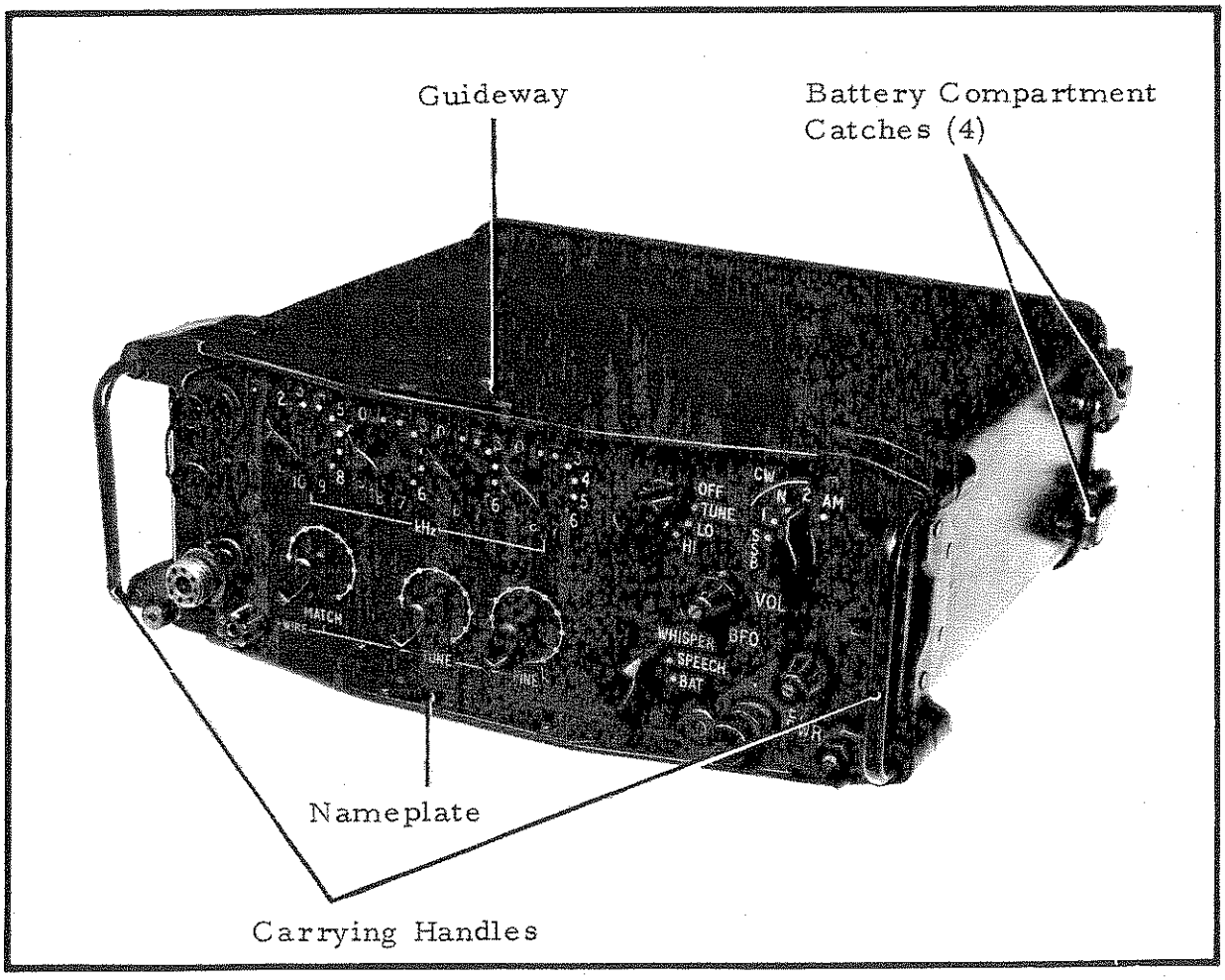

FIG 17
RECEIVER-TRANSMITTER

SECTION 5

COMPONENTS OF RADIO SET GRC-F2

General

31. The Radio Set GRC-F2 comprises a Radio Set PRC-F1, or F3 and a Conversion Kit, MK-F7 (refer para 5). A metal transit case is provided for transporting (or storing) the complete Conversion Kit. On receipt the case contains the components of the kit listed in Table 2. To ascertain the correct Defence Stock Numbers of these components refer to CES No 4091.

TABLE 2 COMPONENTS OF RADIO SETS, GRC-F2

Serial	Designation	Qty	Reference No	
			Fig	Item
1	RADIO SET PRC-F1 as per Table 1	1		
	OR			
2	RADIO SET PRC-F3	1		
3	CONVERSION KIT, MK-F7 comprising items 4 to 14.			
4	ANTENNA, AS-F3	1	18	1
5	ANTENNA, AS-F4	1	18	2
6	CABLE ASSEMBLY: RADIO FREQUENCY, CG-F1	1	18	3
7	RADIO FREQUENCY, CG-F2 c/w BAG	1	18	4
8	SPECIAL PURPOSE, ELECTRICAL, BRANCHED, CX-F15	1	19	1
9	CORD ASSEMBLY, ELECTRICAL, 2 Conductors	1	-	-
10	COUPLER, ANTENNA, CU-F2	1	19	2
11	CASE, ASSEMBLY, TRANSIT, CY-F2	1	20	-
12	FIELD PACK, CANVAS, Olive Drab	1	20	-
13	HEADSET ELECTRICAL, H-233/PRC	1	2	-
14	KEY TELEGRAPH, KY-116/U	1	21	-

Description of Components

32. Antenna, AS-F3. (Fig 18, Item 1). This is an adjustable end-fed wire antenna. The radiating element is wound onto a light metal frame which is fitted with insulated ends. A plate affixed to the frame depicts the method of erection, and the required number of links to be made for a given frequency. The element is approximately 42 m long and

is made up of 11 sections of wire of different lengths. The first section terminates at the open end in an insulator, and at the other end in the 'eye' half of a linkage assembly. The next section starts with the 'hook' half of a linkage assembly, and terminates in the 'eye' half as do all the remaining sections. Each section is numbered on the linkage components in the order of erection, and as shown on the plate. Also attached to the frame is an orange lead-in wire for connection of the antenna to the receiver/transmitter or antenna coupler. Adjacent sections are mechanically connected, and kept in their correct sequence by short lengths of nylon cord. Electrical connection between sections is made by joining the relevant linkage assemblies.

33. Antenna, AS-F4. (Fig 18, Item 2). This end-fed wire antenna is similar to the Antenna, AS-F3 except that it is non adjustable, in that the radiating element consists of one continuous section of wire approximately 13 m long.

34. Cable Assembly, Radio Frequency, CG-F1. (Fig 18, Item 3). This assembly comprises a coaxial cable 66 cm long fitted with a connector at each end. It is used to connect the radio frequency (rf) connector of the receiver transmitter to the rf connector of the Coupler Antenna, CU-F2.

35. Cable Assembly, Radio Frequency, CG-F2. (Fig 18, Item 4). This assembly comprises a coaxial cable approximately 15 m long fitted with a connector at each end. The cable is permanently attached to a zippered container bag. The assembly is used to make the same connection as the CG-F1 but by reason of its greater length permits the receiver transmitter to be operated at a distance from the coupler antenna.

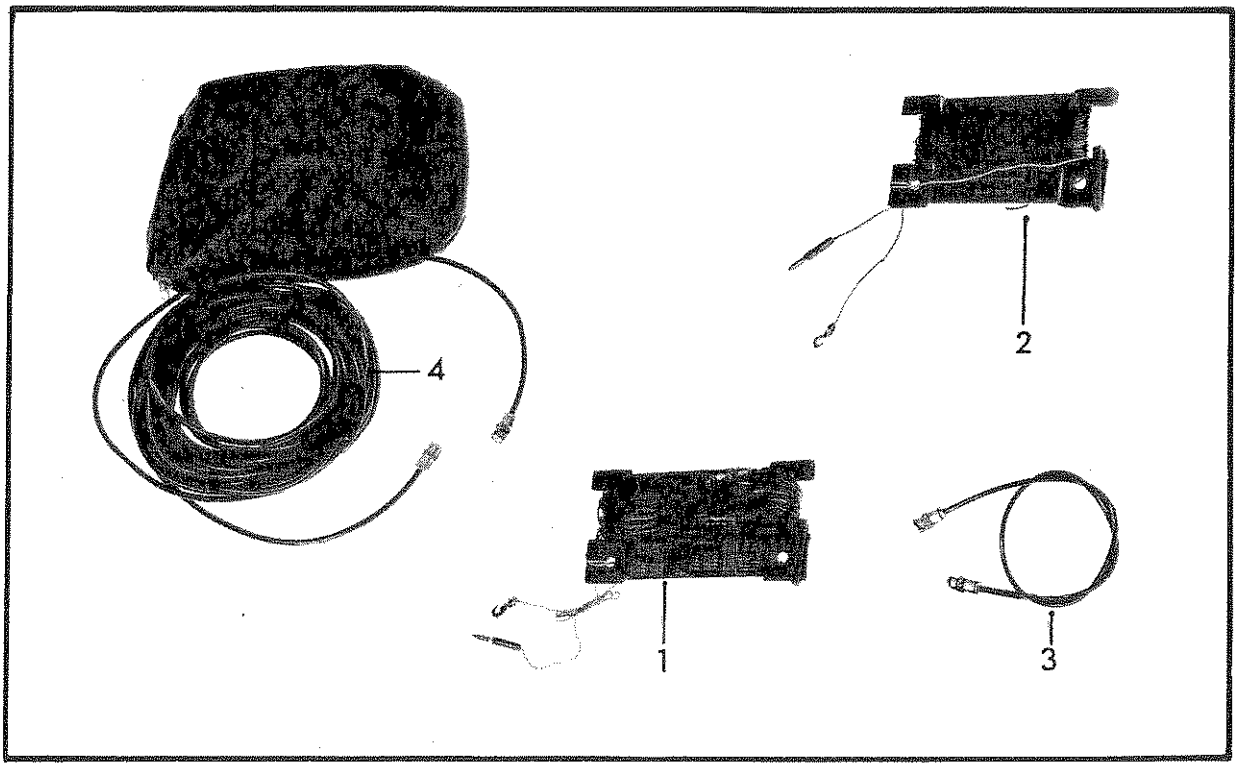

FIG 18
RADIO FREQUENCY CABLES

36. Cable Assembly, Special Purpose, Electrical Branched, CX-F15. (Fig 19, Item 1). This assembly enables the operator to connect to the receiver transmitter the Key Telegraph, KY-116/U, the Headset, H-233/PRC and one other audio accessory eg, Handset, H-F2 or Microphone Dynamic, M-F1. The assembly is approximately 1.4 m long. It is fitted with a five pin connector at one end and a jack at each of the branched ends. Plugs attached to the Key Telegraph, KY-116/U and the Headset, H-233/PRC are inserted into the jacks and the five pin connector to one of the audio connectors of the receiver transmitter.

37. Cord Assembly Electrical, 2 Conductors (Not illustrated, expendable item).

38. Coupler, Antenna, CU-F2. (Fig 19, Item 2). The coupler is a lightweight unit housed in a case of cast aluminium, panclimatically sealed by means of a synthetic rubber seal between the front panel and the main body which are secured together with six captive screws. The coupler is used to match the 50 Ohms output of the transmitter to the impedance of the various antennae supplied. Correct matching enables the best use to be made of transmitter power output and receiver sensitivity.

39. Case Assembly, Transit, CY-F2. (Fig 20). This metal case has an airtight lid secured by eight spring catches and is fitted with two carrying handles. A stowage compartment in the lid is covered by a hinged flap which is secured by two quarter turn fasteners. The case is partitioned to provide storage for all components of the conversion kit with the exception of the field pack which is stowed in the compartment in the lid.

40. Field Pack, Canvas, Olive Drab. (Fig 20). This is a compartmented canvas pack designed to stow all components of the conversion kit for man carriage.

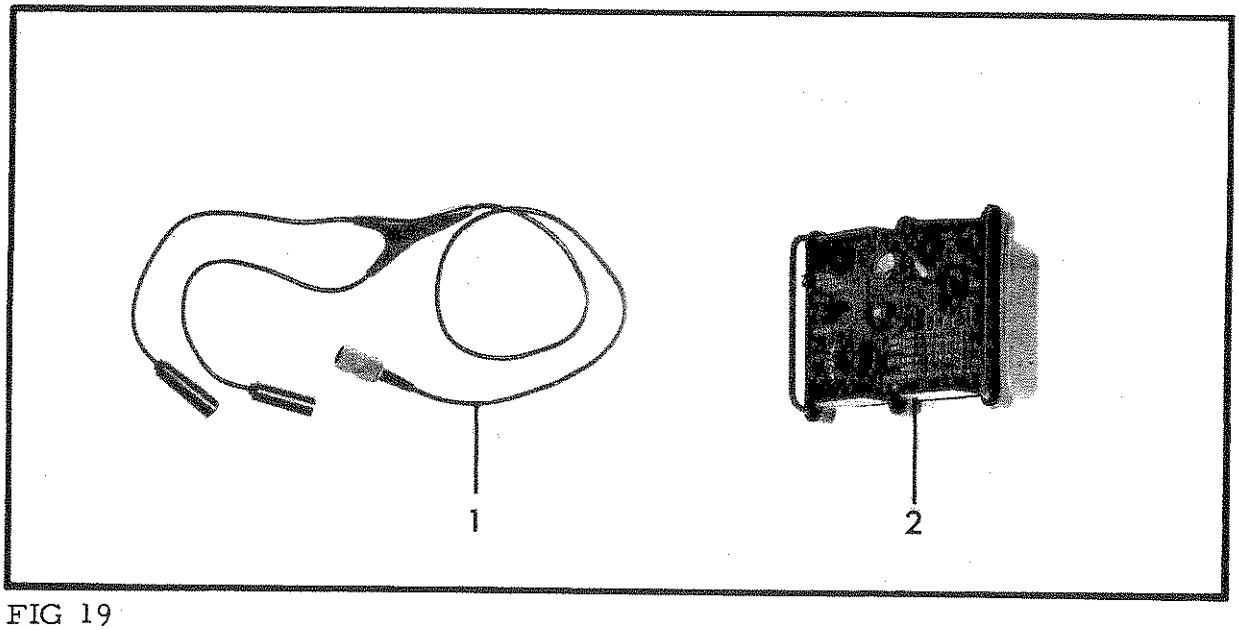

FIG 19
CABLE, CX-F15 AND COUPLER, ANTENNA, CU-F2

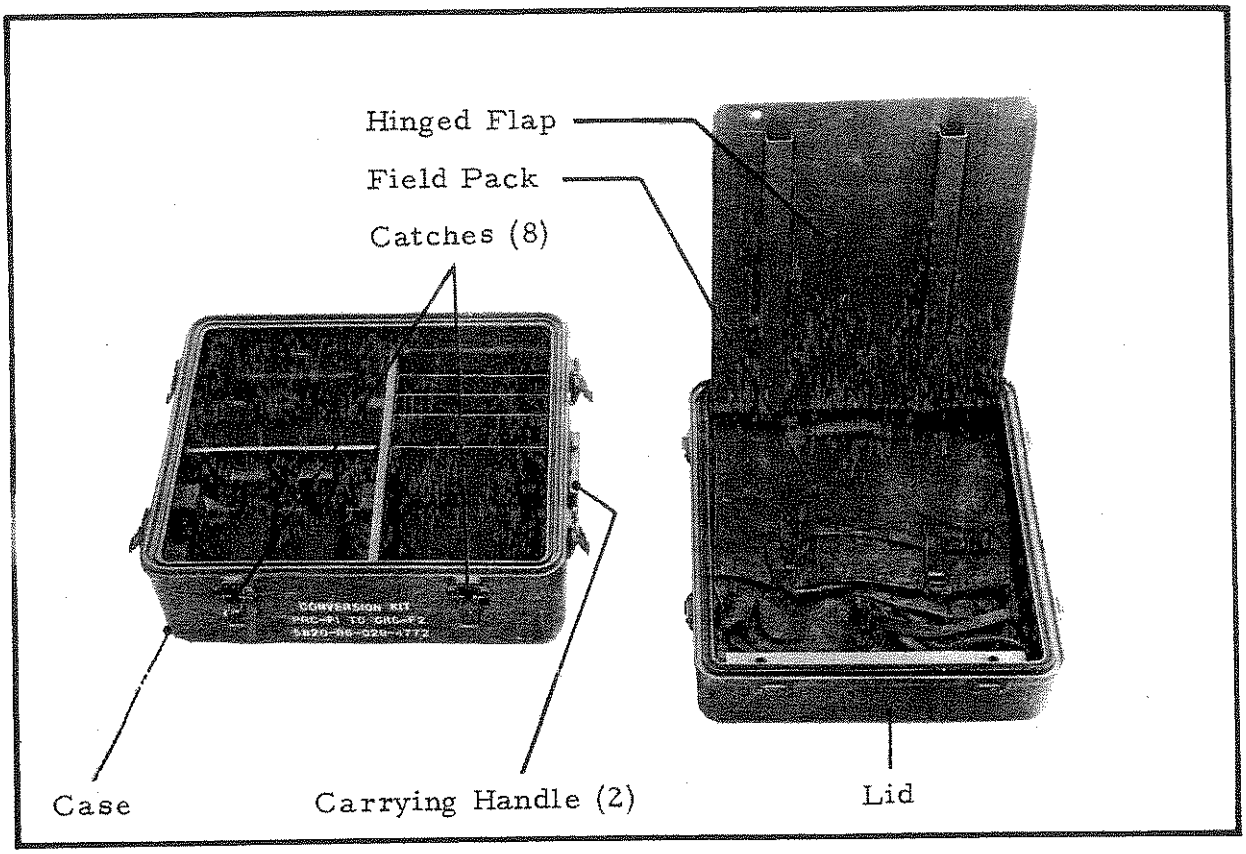

FIG 20
CASE ASSEMBLY TRANSIT, CY-F2

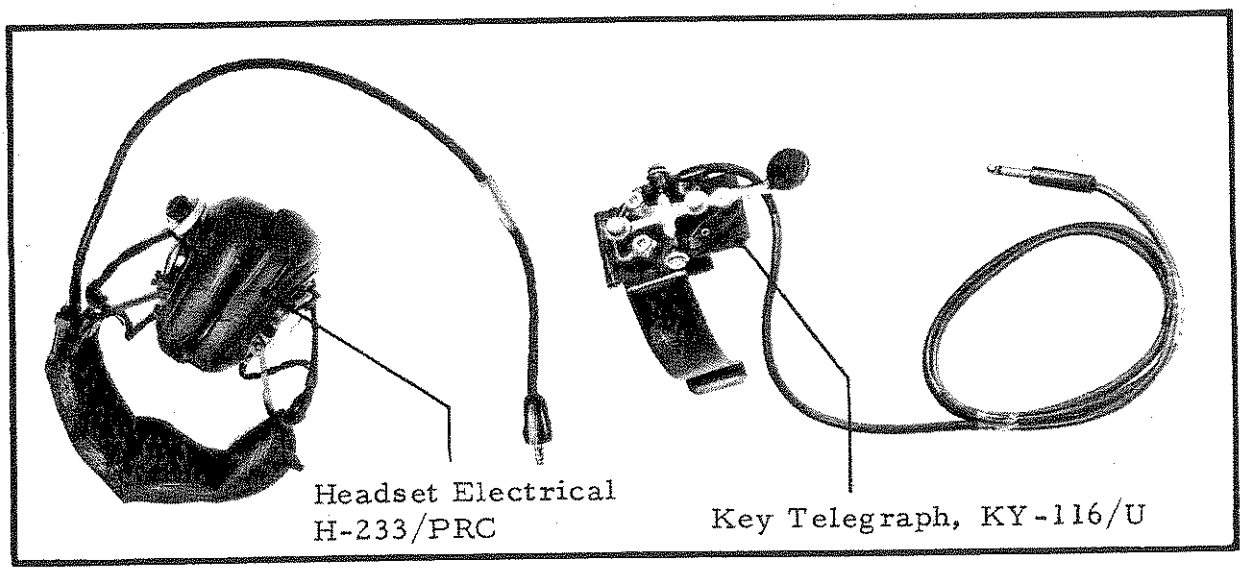

FIG 21
AUDIO COMPONENTS

41. Headset Electrical, H-233/PRC and Key, Telegraph, KY-116/U. (Fig 21). These components provide for more comfortable operation of the ground station but they can only be connected to the receiver-transmitter via the Cable Assembly, Special Purpose, Electrical Branched, CX-F15. Both components incorporate a cable which terminates in a plug. Connection is made by inserting these plugs into the jacks fitted to the branched ends of the Cable CX-F15.

SECTION 6

COMPONENTS OF INSTALLATION KIT, ELECTRONIC EQUIPMENT, MK-F8

General

42. The Installation Kit, Electronic Equipment, MK-F8 is a general purpose installation kit which includes a power supply, vertical whip antenna, and the necessary mounting hardware and cables to permit installation of the Radio Set, GRC-F2 in vehicles or water craft. In conjunction with a suitable power source it can be used to provide a more permanent ground station than the Radio Set, GRC-F2. The receiver-transmitter, coupler antenna, and power supply can be mounted on the shock base mounts supplied in this kit.

43. Antennae can then be erected and a good permanent earth system installed, according to the anticipated length of operation at the site.

44. On receipt, the kit MK-F8 is packed in a wooden shipping case which contains all the components listed in Table 3. To ascertain the correct Defence Stock Numbers of these components refer to CES No 4089.

TABLE 3 COMPONENTS OF INSTALLATION KIT, ELECTRONIC EQUIPMENT, MK-F8

Serial	Designation	Qty	Reference No	
			Fig	Item
	ANTENNA ELEMENT:			
1	MS-116A	5		
2	MS-117A	2	22	1
3	MS-118A	2		
4	ANTENNA SHEATH CLAMP, Brass	1	22	2
5	AUDIO, ACCESSORY MOUNTING KIT, MK-F6	1	22	3
	BASE, SHOCK MOUNT, ELECTRICAL EQUIPMENT:			
6	MT-F2	1	22	4
7	MT-F3	1	22	5
8	MT-F4	1	23	1
9	BASE, ANTENNA, SUPPORT AB243/C	1	23	2
	CABLE ASSEMBLY, SPECIAL PURPOSE, ELECTRICAL:			
10	BRANCHED, CX-F8	1	23	3
11	CX-F7	1	23	4
12	CAPACITOR, FIXED, CERAMIC DIELECTRIC	1	23	5

TABLE 3 (cont)

Serial	Designation	Qty	Reference No	
			Fig	Item
13	COVER ANTENNA	1	23	6
14	CABLE SUPPORT KIT, MK-F4	1	23	7
15	EARTHING KIT, MK-F3	1	23	8
	HARDWARE KIT, ELECTRONIC EQUIPMENT:			
16	MK-F1	1	23	9
17	MK-F2	1	24	1
18	LEAD IN SUPPORT KIT, MK-F5	1	24	2
19	MAST BASE, AB652/VR	1	24	3
20	OPERATING PROCEDURE, for Radio Set, GRC-F2, Mobile Installation	1		
21	POWER SUPPLY, PP-F1	1	24	4
22	WIRE ELECTRICAL, PVC BLACK, w/Cable Plug	1	24	5

Description of Components

45. Antenna Elements, MS-116A, 117A and Antenna Section, MS-118A (Fig 22, Item 1). These components are hollow, threaded metal tubes which are screwed together to make up a 4.5 m vertical whip antenna. They are assembled from the base upward in the sequence MS-116A, 117A, and 118A. The bottom end of the lower MS-116A section is mounted in the Mast Base, AB243/C.

46. Antenna, Sheath Clamp, Brass. (Fig 22, Item 2). This brass clamp fits over the cover antenna. It fixes the cover firmly in position and prevents it from splitting caused by excessive antenna lash.

47. Audio, Accessory Mounting Kit, MK-F6. (Fig 22, Item 3). This kit includes two cradles to hold the Handset, H-F2 and Microphone, Dynamic, M-F1, and the necessary hardware to secure the cradles in position.

48. Base, Shock Mount, Electrical Equipment, MT-F2. (Fig 22, Item 4). This is a rectangular sheet metal case with an open front, into which the receiver transmitter is mounted and secured by two screw clamps. The case is attached by shock mounts to a base plate for mounting on a horizontal surface.

49. Base, Shock Mount, Electrical Equipment, MT-F3. (Fig 22, Item 5). This is a rectangular sheet metal base with flanges turned up at the sides and rear. It is screwed to the top of the Base MT-F2 (para 105). The Power Supply, PP-F1 is located on the base by two spigots at the rear and secured by a screw at the front.

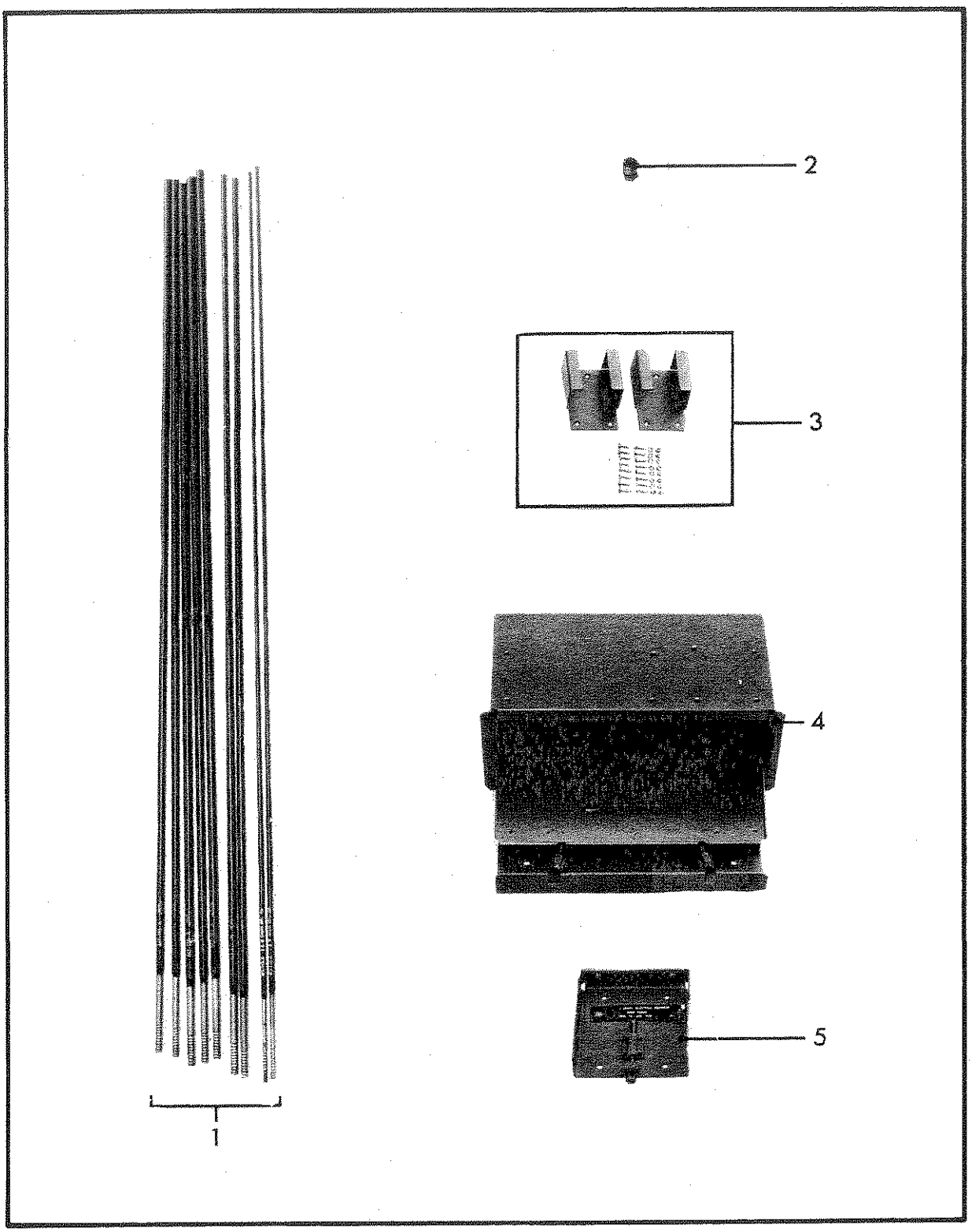

FIG 22
COMPONENTS OF INSTALLATION KIT

50. Base, Shock Mount, Electrical Equipment, MT-F4. (Fig 23, Item 1). This is a rectangular sheet metal base with flanges turned up at the sides and rear. It is screwed to the top of the Base, MT-F2 (para 105). The Coupler Antenna, CU-F2 is located on the base by two spigots at the rear and secured by two screw clamps at the front.

51. Base, Antenna, AB 243/C. (Fig 23, Item 2). This mild steel bracket is provided to mount the Mast Base, AB 652/VR. It is secured to a vertical surface of the vehicle or watercraft in which the station is being installed. The antenna support of the mast base is passed through the large hole in the bracket and secured with the plastic insulating pieces (refer para 109). In some cases holes may be drilled in the metalwork of some vehicles to mount the mast base and the bracket will not be required for the installation.

52. Cable Assembly, Special Purpose, Electrical, Branched CX-F8. (Fig 23, Item 3). This assembly is approximately 4.5 m long. It is fitted with a terminal lug on each of the branched ends and a two pin plug at the other end. It is used to make a connection between the power source and the DC IN socket of the Power Supply, PP-F1.

53. Cable Assembly, Special Purpose, Electrical, CX-F7. (Fig 23, Item 4). This assembly is approximately 46 cm long and is fitted with a three pin plug at each end. It is used to make a connection between the DC-OUT socket of the Power Supply, PP-F1 and the EXT-PWR socket of the receiver transmitter.

54. Capacitor, Fixed, Ceramic, Dielectric, Modified. (Fig 23, Item 5). This is a 1000 pF, 20 000 V dc Wkg capacitor modified by the addition of a pin at one end which is suitable for insertion in the terminal on the bottom of the Mast Base, AB 652/VR. The cable lug on the wire electrical (para 111) is secured to the other end of the capacitor with a screw. The capacitor provides suitable protection to the Radio Set, GRC-F2 in the event of contact of the antenna with overhead power lines.

55. Cover Antenna. (Fig 23, Item 6). This safety cover is a flexible plastic sheath which fits over the top portion of the Mast Base, AB 652/VR and the lower Antenna Element, MS-116A.

56. Cable Support Kit, MK-F4. (Fig 23, Item 7). This kit contains the screws, nuts, cable clips and grommets required to install the Cable Assembly Special Purpose Electrical, Branched, CX-F8.

57. Earthing Kit, MK-F3. (Fig 23, Item 8). This kit contains the necessary earth straps and fixing hardware to make a good earth connection between the Coupler, Antenna, CU-F2 and the vehicle chassis.

58. Hardware Kit, Electronic Equipment, MK-F1. (Fig 23, Item 9). This kit contains the hardware necessary for the assembly and installation in the vehicle of the three bases shock mount (refer para 104 to 107).

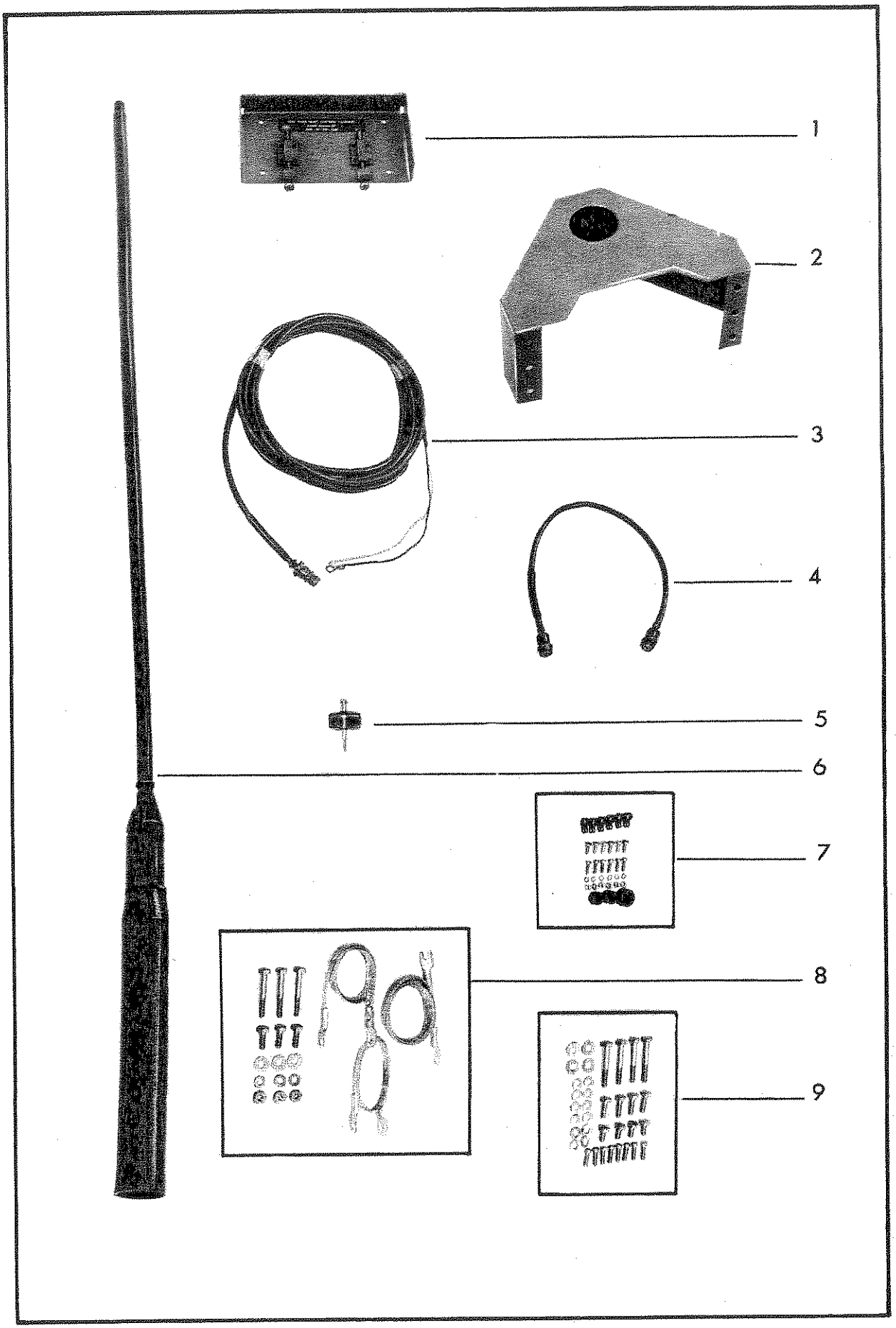

FIG 23
COMPONENTS OF INSTALLATION KIT

59. Hardware Kit, Electronic Equipment, MK-F2. (Fig 24, Item 1). This kit contains the hardware necessary to secure the Base, Antenna Support, AB 243/C to the vehicle. Grommets are provided to make a cable entry for the wire electrical between the coupler and antenna base. A tube of cement is included to seal the entry against the ingress of moisture.

60. Lead-In Support, Kit, MK-F5. (Fig 24, Item 2). This kit includes cable cradles, clips and the necessary hardware to secure them to the vehicle. The cradles are to support the wire electrical between the antenna base and the coupler.

61. Mast Base, AB652/VR. (Fig 24, Item 3). This consists of a metal antenna support internally threaded at both ends, and two hard plastic insulating pieces. The top plastic piece slips over the bottom portion of the antenna support. An integral metal core extends from top to bottom through the centre of the bottom plastic piece. The core is threaded at the top to screw into the antenna support and has a terminal at the bottom to provide for connection of the antenna lead. To secure the base to the Base, Antenna Support, AB 243/C insert the bottom of the antenna support through the top plastic piece and through the hole provided in the Base Antenna Support, and screw on the bottom plastic piece. The antenna is secured by screwing the bottom end of the lower element into the top of the antenna support.

62. Operating Procedure for Radio Set GRC-F2, mobile installation. This operating procedure card is not illustrated.

63. Power Supply, PP-F1. (Fig 24, Item 4). This power supply is a compact, lightweight unit, housed in a case of cast aluminium alloy. The case is panclimatically sealed by a synthetic rubber gasket between the front panel and the main body, the two assemblies being held together by a captive screw at each of the four corners.

64. When supplied with power from a suitable source (para 108) the power supply will provide the power requirements for one receiver-transmitter of either the Radio Set, PRC-F1 or F3, and simultaneously charge the internal battery at either a FULL charge rate of 100 mA or a TRICKLE charge rate of 20 mA.

65. Wire Electrical, PVC, Black (Fig 24, Item 5). This high voltage insulated wire is approximately 3 m long and is fitted with a cable lug at one end. It is used to make connection between the capacitor mounted on the terminal of the Mast Base, AB 652/VR and the Coupler Antenna, CU-F2. The wire should be cut to the required length for the installation.

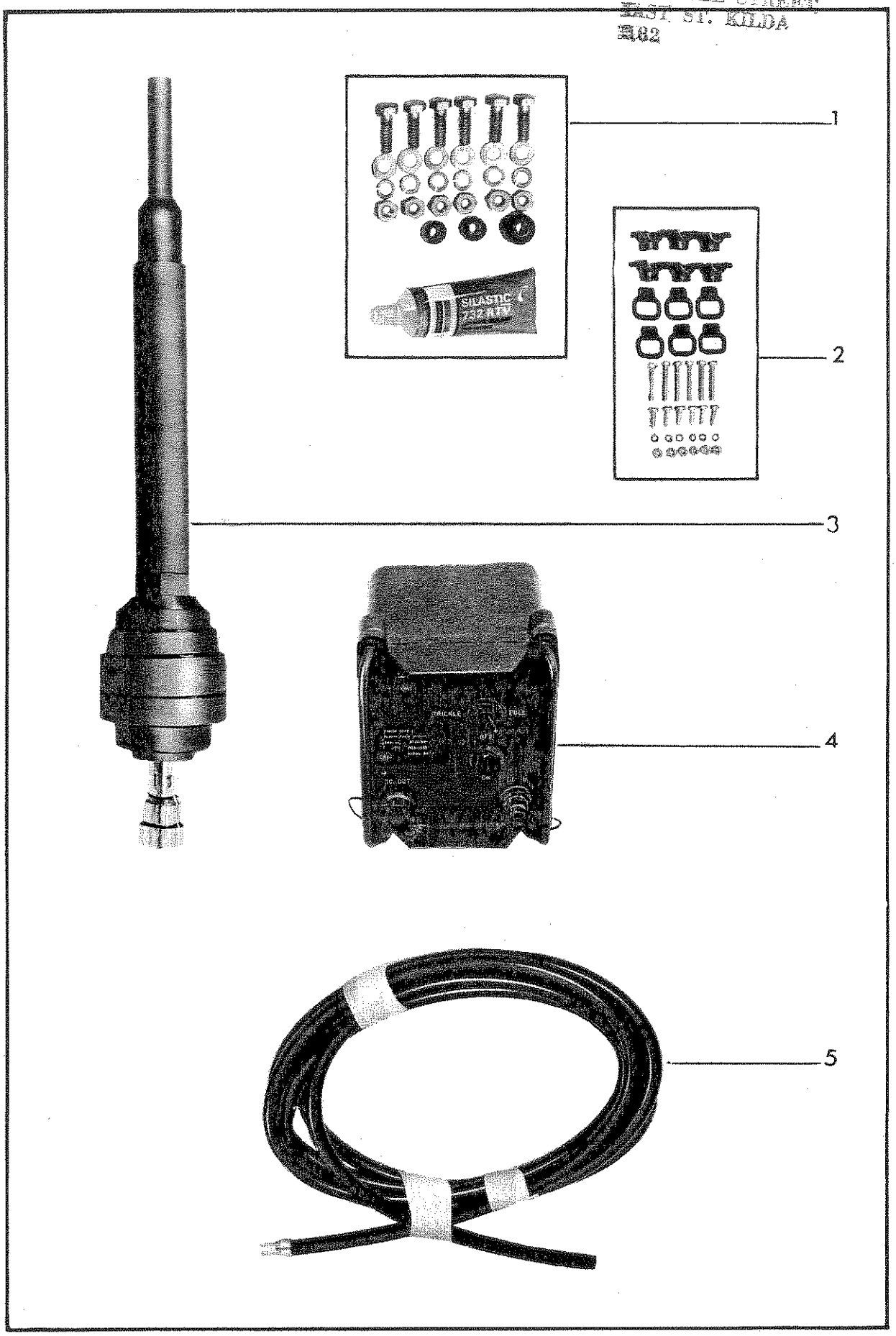

FIG 24
COMPONENTS OF INSTALLATION KIT

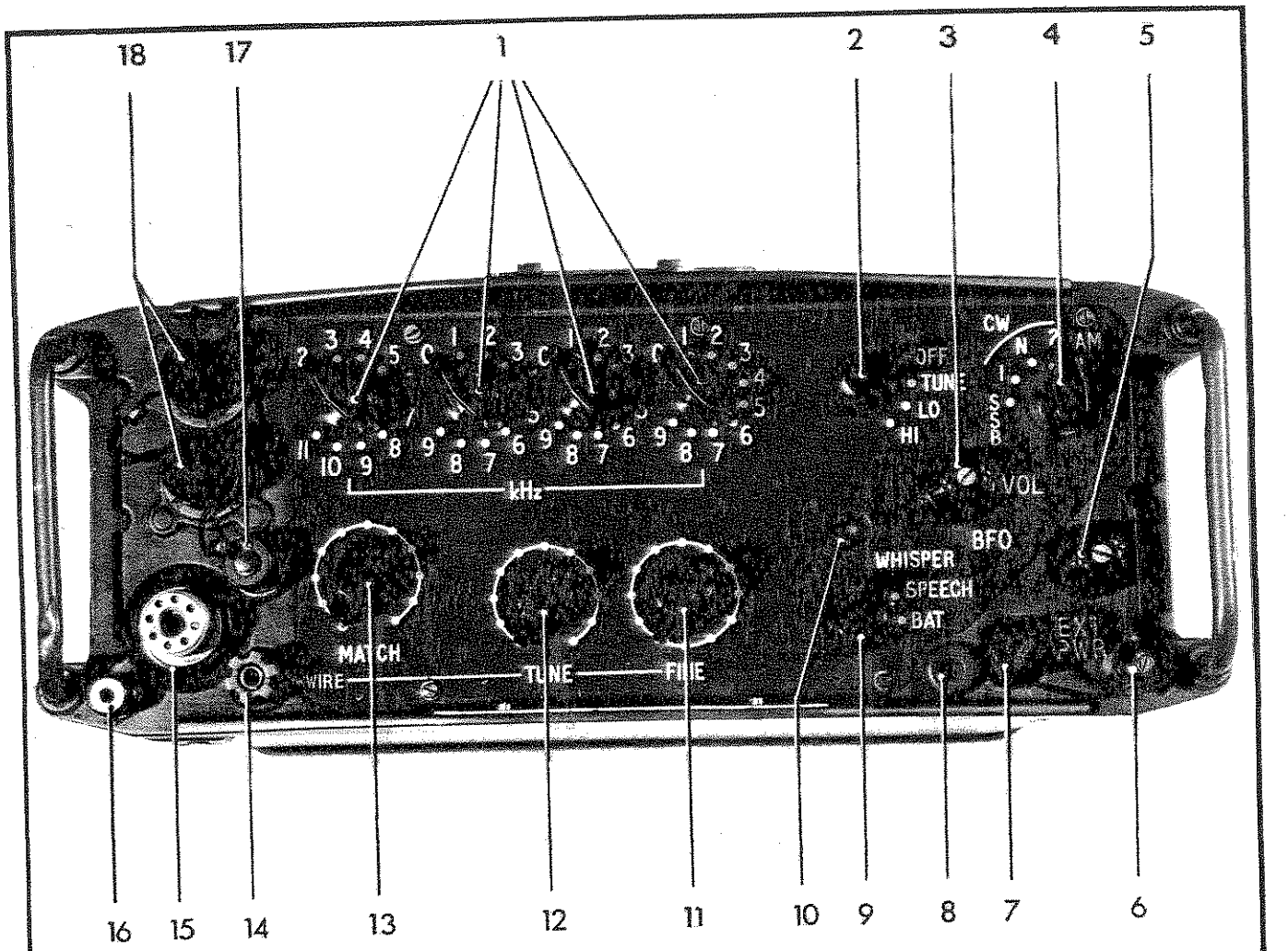

1 Frequency Selectors
2 Power Switch
3 Volume Control
4 Mode Switch
5 BFO Control
6 Seal Testing Plug
7 External Power Connector
8 Battery Indication Lamp
9 Whisper-Speech-Battery Switch
10 Humidity Indicator
11 Fine Tuner
12 Tune Control
13 Matching Control
14 Wire Terminal
15 Coupler Antenna Connector
16 Earth Terminal
17 Radio Frequency Connector
18 Audio Connectors

FIG 25
FRONT PANEL, RECEIVER-TRANSMITTER

SECTION 7

RADIO SET PRC- F1 AND F3 CONTROLS AND ASSOCIATED ITEMS ON FRONT PANEL

General

66. This section describes the type, location and function of the controls, connectors, and associated items located on the front panel of the Radio Set PRC-F1 and F3. The items are illustrated in Fig 25, 26 and 27 and described in Table 4.

TABLE 4—RADIO SET PRC-F1 AND F3 TYPE AND FUNCTION OF CONTROLS ETC

Fig 25, Item No	Control/Connector Etc	Function
1	Frequency Selector	These four ten position switches are used to set the assigned frequency in kHz. The left hand switch positions are numbered 2-12 inclusive, and the positions of the three remaining switches are numbered 0-9 inclusive.
2	Power Switch	The four positions on this switch are OFF, TUNE, LO and HI. OFF : Disconnects the battery supply from the receiver-transmitter. TUNE : Energizes a tone oscillator to provide audible indication of correct tuning. LO, HI : Switches the transmitter to low or high power output.

TABLE 4 (cont)

Item No	Control/Connector Etc	Function
3	Volume Control	Receiver volume control.
4	Mode Switch	The five positions of this switch are: SSB, CW1, CWN, CW2 and AM. SSB : Upper sideband speech communication. CW1 : Equivalent to 2 kHz tone telegraphy over SSB channel. CWN : 425 Hz bandwidth on receive with fixed beat note of 2 kHz. CW2 : 6 kHz receiver bandwidth and beat frequency oscillator. AM : 6 kHz bandwidth. Compatible AM transmission, normal AM reception.

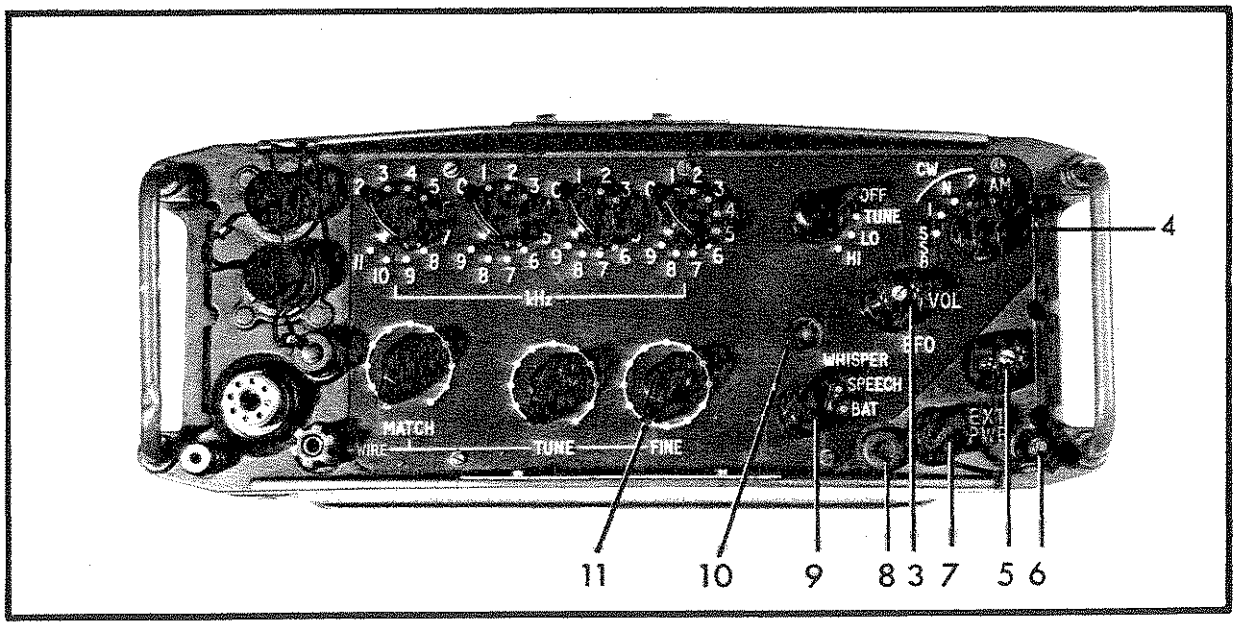

FIG 26
FRONT PANEL, RECEIVER-TRANSMITTER

TABLE 4 (cont)

Item No	Control/Connector Etc	Function
5	BFO Control	Beat frequency oscillator control, effective with CW2 reception only
6	Seal Testing Plug	Permits seal testing of receiver-transmitter.
7	External Power (EXT PWR)	Connector for Cable CX-F7 from power supply. The dummy plug must be inserted when external power supply is not being used.
8	Battery Indicator Lamp	Lights when switch (Item 9) is moved to the BAT position and if battery voltage exceeds approximately 24.5 V.
9	WHISPER-SPEECH-BATTERY Switch	The three positions on this switch are WHISPER-SPEECH-BAT. WHISPER : Allows low level speech to fully modulate the transmitter. SPEECH : Requires normal speech to fully modulate the transmitter. BAT : Checks conditions of internal battery by lighting battery indicator lamp. See Items.
10	Humidity Indicator	Normally BLUE in colour, but turns PINK when moisture is present in the receiver-transmitter.
11	Fine Tuner	Fine control for tune circuit.

TABLE 4 (cont)

Item No	Control/Connector Etc	Function
12	Tune Control	Tunes reactive component of antenna circuit. This control is not used with the 2.4 m whip antenna.
13	Matching Control	Adjusts output matching to dipole or end fed wire antenna. Set to O when using 2.4 m whip antenna.
14	WIRE Terminal	Terminal for end fed wire antenna or one end of the dipole feeder.
15	Coupler Antenna Connector	Connector for the Coupler Antenna CU-F1, or the integral cable of the Coupler Antenna, CU-F1A1.
16	EARTH Terminal	Terminal for green wire of counterpoise or one end of dipole feeder.
17	Radio Frequency Connector	Connector for Cable Assembly Radio Frequency, CG-F1 or F2. Only used with Coupler Antenna, CU-F2.
18	Audio Connectors	Two parallel connectors for audio accessories, eg, handset microphone etc.

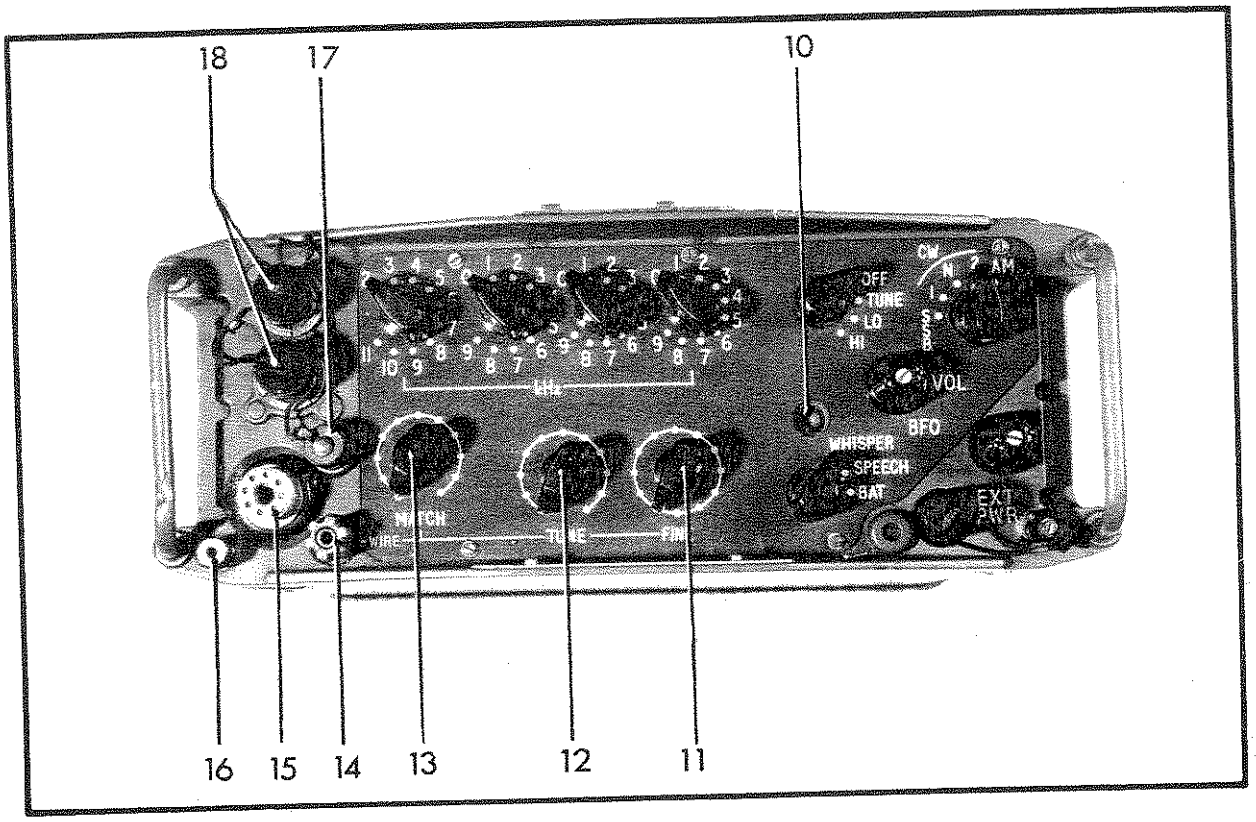

FIG 27
FRONT PANEL, RECEIVER-TRANSMITTER

SECTION 8

COUPLER, ANTENNA, CU-F2

CONTROLS AND ASSOCIATED ITEMS ON FRONT PANEL

General

67. This section describes the type, location and function of the controls, connectors, and associated items located on the front panel. The items are illustrated in Fig 28 and described in Table 5.

TABLE 5—COUPLER, ANTENNA, CU-F2
TYPE AND FUNCTION OF CONTROLS ETC

Item No	Control/Connector Etc	Function
1	Radio Frequency Connector	Connector for Cable CG-F1 or F2. Coupler to receiver-transmitter.
2	BRIDGE-OPERATE-CURRENT Switch	The three positions on this switch are: BRIDGE : Used to match the antenna to 50 Ohms. OPERATE : Normal positions; metering out of circuit. CURRENT : Monitors antenna current on meter.
3	Meter	Meter for bridge indication or antenna current monitoring.
4	Antenna Terminal	Spring loaded terminal for connection of end fed wire antenna.
5	Antenna Terminals	Two RED terminals for connection of dipole feeder leads.
6	Earth Terminal	Black terminal for connection of green wire of counterpoise. Not used with dipole.
7	Frequency MHz Switch	Six position switch used to select the correct circuit and components for antenna in use at the assigned frequency.
8	Humidity Indicator	Normally BLUE in colour, but turns PINK when moisture is present in the Coupler.
9	Tune Control	Tunes reactive component of antenna impedance.
10	Match Control	Matches impedance of antenna to 50 Ohms.

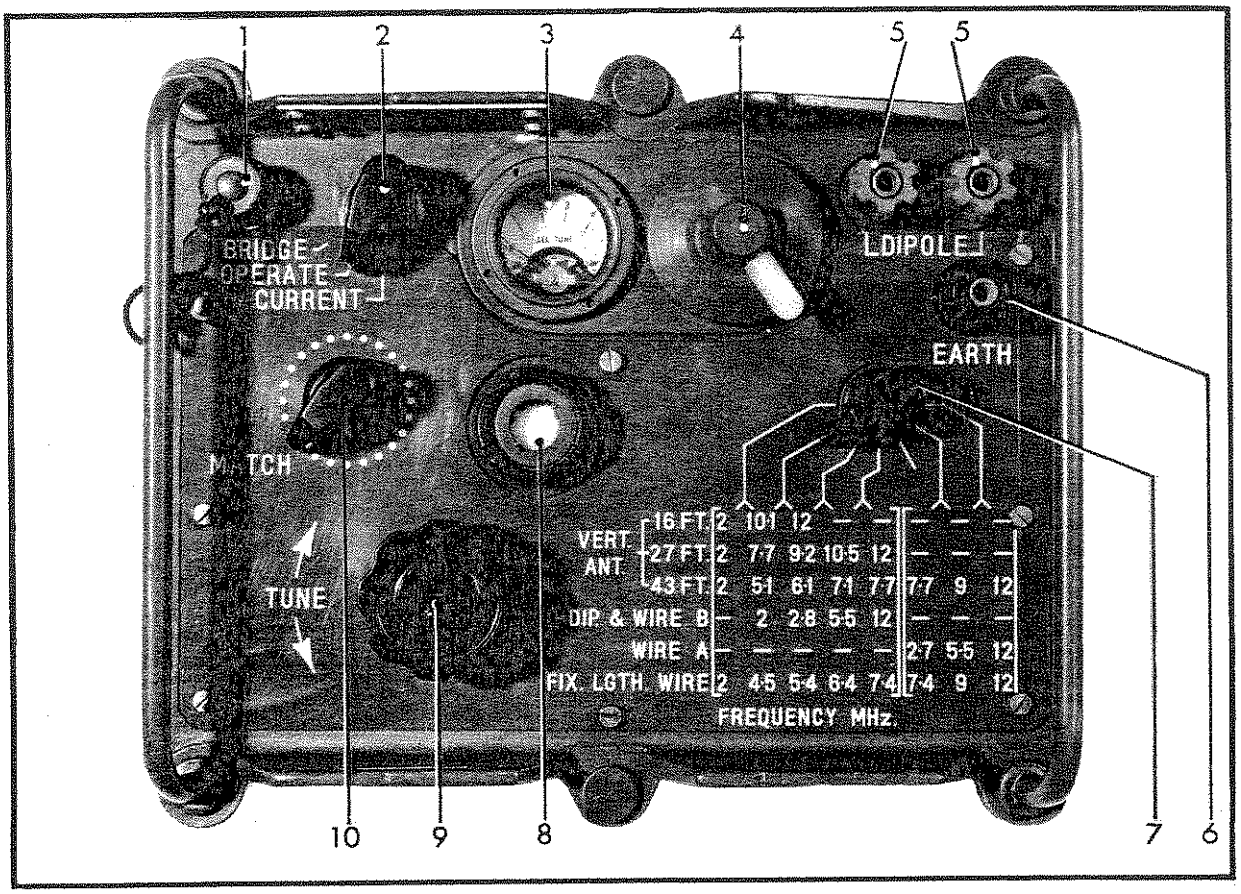

FIG 28 FRONT PANEL - COUPLER ANTENNA, CU-F2

SECTION 9

POWER SUPPLY, PP-F1 CONTROLS AND ASSOCIATED ITEMS ON FRONT PANEL

General

68. This section describes the type, location and function of the control, connectors and associated items located on the front panel. The items are illustrated in Fig 29, and described in Table 6.

TABLE 6— POWER SUPPLY, PP-F1 TYPE AND FUNCTION OF CONTROLS ETC

Item No	Control/Connector Etc	Function
1	Charging Rate Switch	Two position toggle switch used to select the charging rate for the internal battery of the receiver-transmitter. The charging rates are: TRICKLE : 20 mA. FULL : 100 mA.

TABLE 6 (cont)

Item No	Control/Connector Etc	Function
2	Power Switch	Two position toggle switch used to switch input to power supply ON or OFF.
3	Power Input Connector	This connector is marked DC IN 20-40 V, and is a connector for the Cable Assembly, CX-F8 used between the power source and power supply.
4	Power Output Connector	This connector is marked DC OUT to R/T UNIT and is a connector for the Cable Assembly, CX-F7 used between the power supply and the receiver-transmitter.
5	Humidity Indicator	Normally BLUE in colour, but turns PINK when moisture is present inside the power supply.

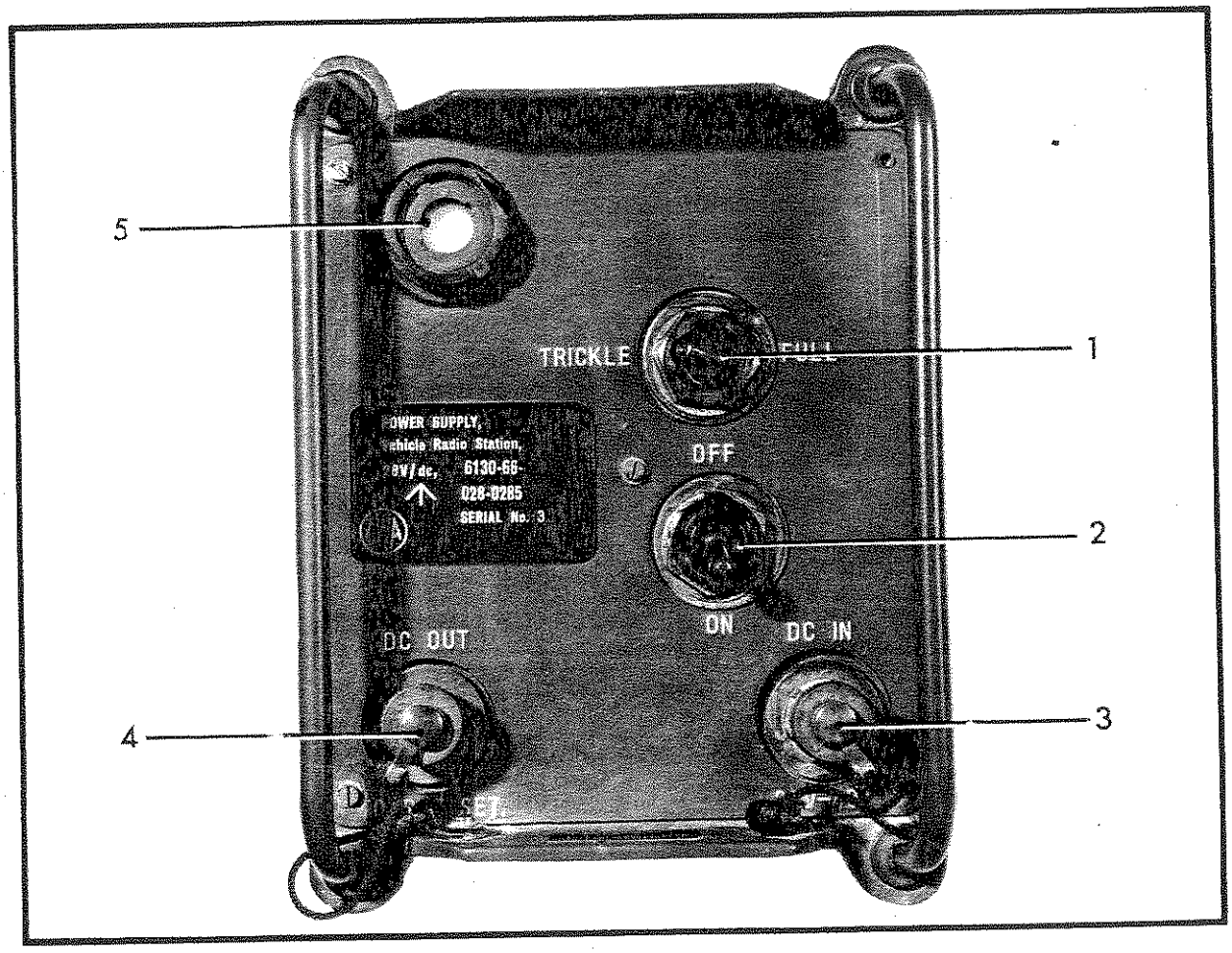

FIG 29
FRONT PANEL - POWER SUPPLY, PP-F1

CHAPTER TWO
OPERATING INSTRUCTIONS

SECTION 10
PRELIMINARY INSTRUCTIONS

Action on Receipt

69. The Radio Sets PRC-F1 and F3, and the Conversion Kit, MK-F7 are each packed in separate metal transit cases. The installation Kit, MK-F8 is packed in a disposable wooden shipping case.

When unpacking the equipment check:

a. For damage, and that the humidity indicators fitted to the Receiver-Transmitter, Coupler Antenna, CU-F8, and the Power Supply, PP-F1 are BLUE in colour; and

b. To see that the equipments are complete in accordance with the relevant Complete Equipment Schedules (CES).

70. If the equipment is deficient, damaged, or if the humidity indicators are PINK in colour the fact should be reported at once so that appropriate remedial action may be taken without delay.

SECTION 11
RADIO SETS PRC-F1 AND F3 SETTING UP PROCEDURE

Manpack Role

71. The Harness, Electrical Equipment, ST-F1 and the two Bags Accessory, CW-F2 are provided for man carriage of the Radio Set PRC-F1 (or F3). The receiver-transmitter is carried in the harness and a range of components necessary for the operation of the set can be selected, as required from the complete station (listed in Table 1). If the set is not to be operated during carriage the selected components are carried in the bags accessory. If the set is to be operated, selected components are connected to the set, and spare or alternative components are carried in the bags accessory.

FIG 30
INSTALLING
BATTERY

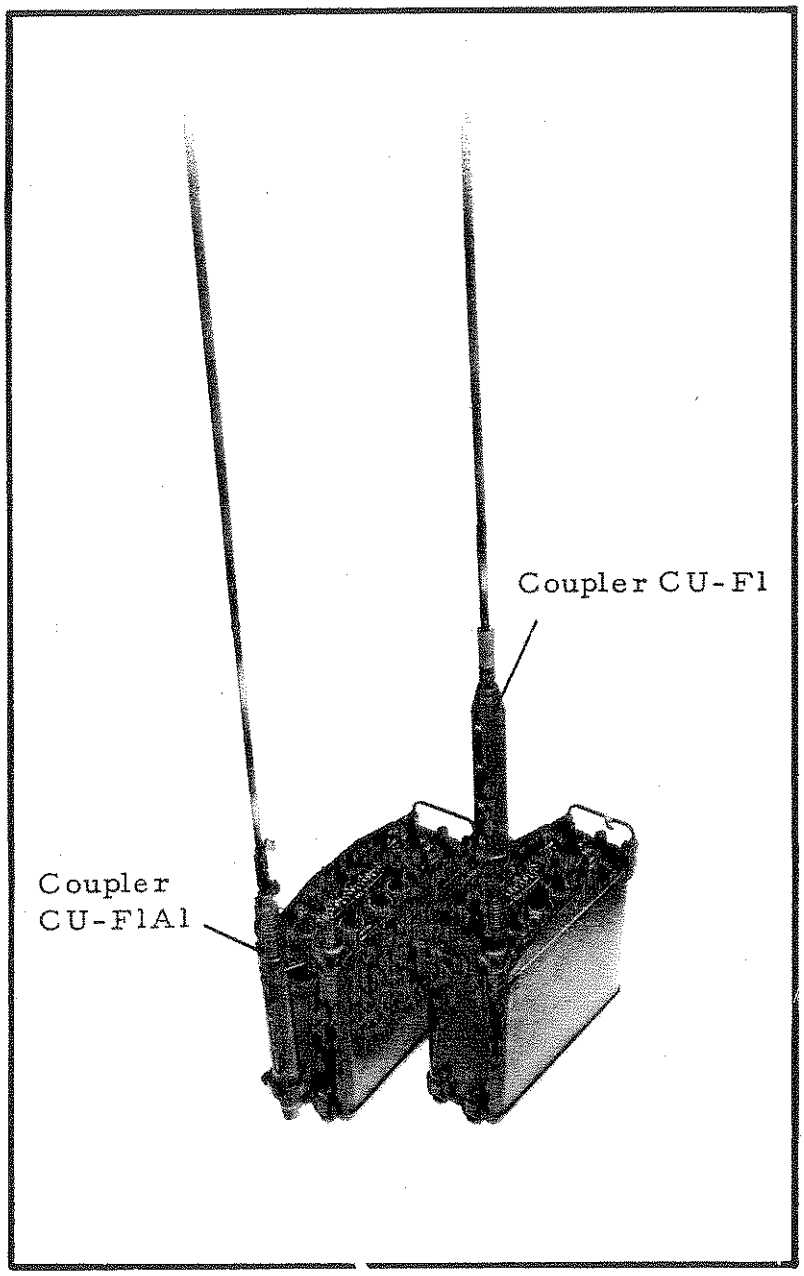

FIG 31 -
COUPLERS
ATTACHED TO
RECEIVER-
TRANSMITTERS

72. The procedures to be followed to prepare the Radio Set, PRC-F1 (or F3) for operating in the manpack role are detailed in the succeeding paragraphs. It is assumed that the checks specified in Action on Receipt (refer para 69) have been carried out. The tuning sequence is given in Section 15, Fig 46).

73. Installing and Checking, Battery, Storage, BB-F1. To install and check the internal battery:

a. Ensure OFF-TUNE-LO-HI Switch is in OFF position.

b. Place the receiver-transmitter front panel downwards on a clean level surface.

c. Working in diagonal pairs, release the four spring catches, (two at a time) at the rear of the unit and remove the battery compartment lid.

d. Insert a battery into the compartment; pressing the battery terminals against the spring contacts and lowering the other end. (Refer Fig 30).

e. Replace the battery compartment lid and secure the four spring catches (in diagonal pairs).

f. Turn the unit front panel upwards.

g. Turn the OFF-TUNE-LO-HI switch to LO, and the WHISPER-SPEECH-BAT switch to BAT. The battery indicator lamp will light if the battery is adequately charged.

74. Attaching Bags Accessory, CW-F2 to Harness, Electrical Equipment, ST-F1. Pass the restraining straps on the harness under the keepers sewn to the back of the accessory bags so that one bag is attached to each side of the harness. If the Coupler Antenna CU-F1A1 is used, one accessory bag may be omitted or relocated.

75. Installation of Receiver-Transmitter in Harness Electrical Equipment, ST-F1. Position the receiver-transmitter unit in the harness ensuring that the two audio connectors are on the operators left side, and that the metal braces on the harness fit around the unit case, and against the flanges on the unit case. Secure the unit to the harness with the two retaining straps.

76. Coupler Antenna, CU-F1. Insert the spigot at the base of the coupler into the socket of the connector on the front panel of the receiver transmitter and tighten the retaining ring securely. Ensure that the coupler tuning knob will be towards the operator when the set is on his back.

77. Coupler Antenna, CU-F1A1. Attach the coupler to the left side of the receiver-transmitter unit (adjacent to the two audio connectors) by inserting the upper bracket on the coupler under the unit handle and the lower bracket under the two catches (left hand side) securing the battery compartment lid. Insert the plug fitted to the integral cable of the coupler into the socket of the antenna connector on the front panel of the unit.

78. Erection of Antenna, AS-F1. To assemble the antenna:

a. Fit the eight sections of the antenna together, easing the nylon cord through the sections so that it does not foul or kink.

b. Push each section well home on the adjacent section and pull the nylon cord through the hole in the bottom section. Wind the cord around the base section (adjacent to the hole) and push the plastic keeper over it.

c. Insert the bottom end of the base section into the top of the Coupler Antenna, CU-F1 or F1A1 and secure by tightening the collet nut.

79. Audio Components. These include the Handset, H-F2, Microphone Dynamic, MF-1 and the Key Telegraph, lightweight, KY-F1A1. Each has an integral cable which terminates in a five pin connector (plug). They are connected (as required) to the audio connectors (sockets) on the front panel of the receiver-transmitter by aligning the flat on the plugs with the yellow mark on the sockets. The connector fitted to the integral cable of the microphone incorporates an adapter socket for connection of the Headset, H-F1. The key can be mechanically attached to the receiver-transmitter by means of a holder fitted to the top of the front panel.

80. Headset H-F1. This component has an integral cable which terminates in a telephone jack. It is connected by plugging the jack into the adaptor socket on the microphone connector (refer para 24).

81. Spare or Alternative Components. Components selected but not required for immediate use are carried in the accessory bags.

82. Carriage, Set Not Operating. If time permits the procedures detailed in para 69 to 72 should be carried out. This provides a good check of the equipment and the components can then be removed and packed in the bags accessory. When packing the components avoid any large weight difference between the two bags as this could cause unnecessary discomfort during carriage.

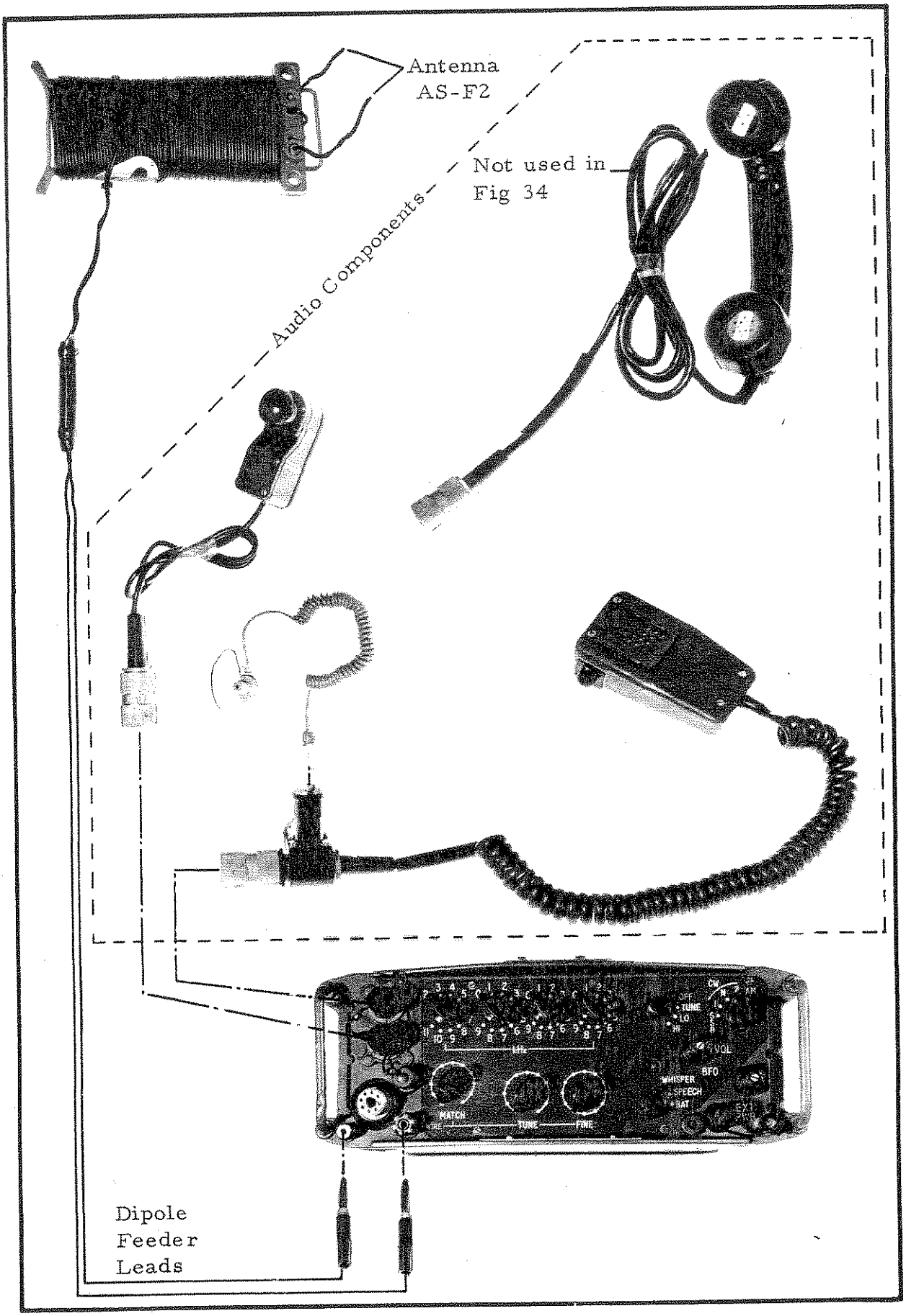

FIG 32
CONNECTION OF COMPONENTS AS
USED ON GROUND STATION SHOWN IN FIG 34

83. Temporary Ground Station. The Radio Set, PRC-F1 (or F3) may be removed from the operator's back and operated as a temporary ground station using:

a. Antenna, AS-F1 (whip) for short range ground wave communications. Some increase in range can be achieved by the use of a good earth connection or the Counterpoise Antenna. A Radio Set PRC-F3 set up as a temporary ground station using Antenna, AS-F1 and prepared for high speed burst keying is illustrated in Fig 33 and Fig 40.

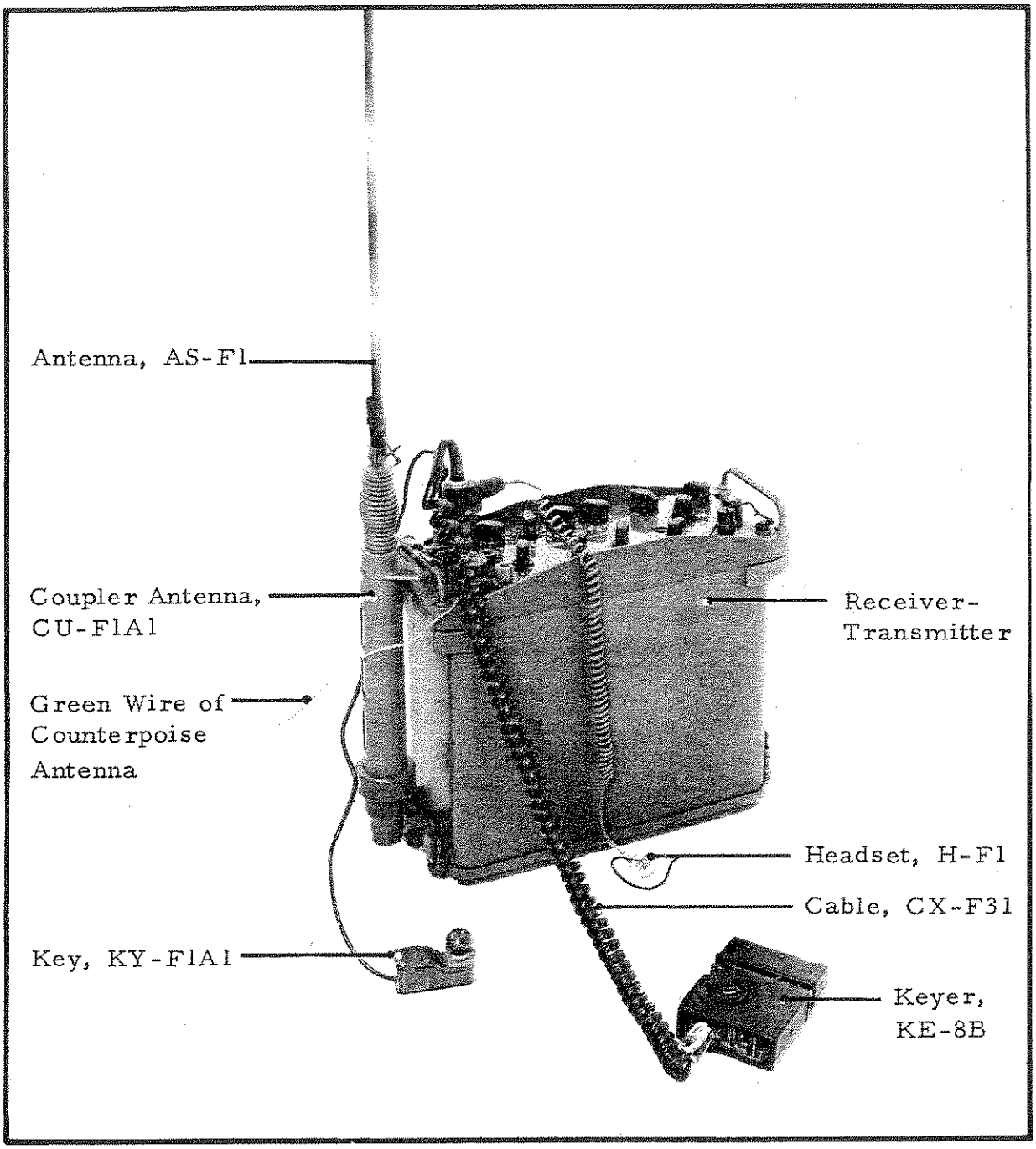

FIG 33
TEMPORARY GROUND STATION USING ANTENNA AS-F1

b. Antenna AS-F2 (dipole) for long range sky wave communications. When using the dipole antenna, ensure that the case of the Receiver-Transmitter is isolated from earth, and do NOT use an earth wire or the Counterpoise Antenna. A Radio Set PRC-F1 (or F3) set up as a temporary ground station using Antennae AS-F2 is shown in Fig 34. Note the use of the Harness, ST-F1 as a means of isolating the case of the set from earth.

84. The tuning sequences are given in Section 15, (refer para 131) and the selection of antenna type, and instructions for the erection and connection of antennae are given in Chapter Four.

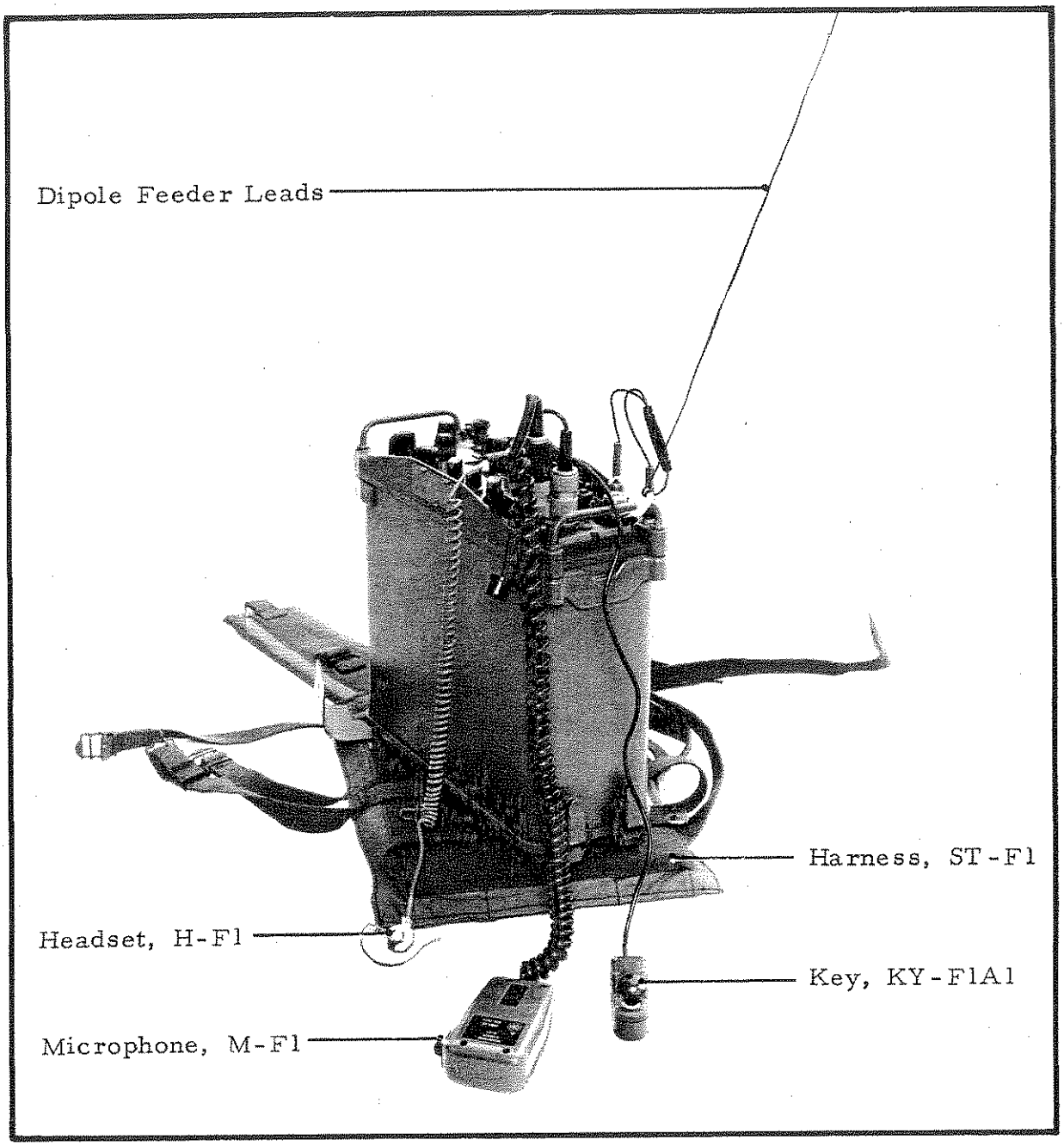

FIG 34
TEMPORARY GROUND
STATION USING DIPOLE

High Speed Keying

85. The high speed burst keying facility is available only on the Receiver-Transmitter, Radio RT-F2/PRC-F3. It can be used whether the receiver-transmitter is being used in the manpack role, or, where it forms an integral part of the ground station or mobile installation. The operating sequence is given in Section 15, Fig 48.

86. Additional items are necessary to prepare the radio set for high speed burst keying operation. These items, which are components of the Coder Burst Transmission Group, AN/GRA-71 are:

a. Keyer, KE-8B, and

b. Cable Assembly, Special Purpose, Electrical, CX-F31.

87. Cable Assembly, CX-F31. This assembly is fitted at one end with a seven pin plug and at the other with a five pin connector which incorporates an adapter socket.

88. Connections. Insert the seven pin plug of the Cable Assembly CX-F31 into the socket on the Keyer KE-8B, and connect the five pin connector to either of the two audio connectors on the front panel of the receiver-transmitter.

89. Audio Components. Plug the jack fitted to the integral cable of the Headset H-F1 into the adapter socket of the Cable Assembly CX-F31. The Key Telegraph, lightweight, KY-F1A1 or the Handset H-F2 can be connected to the other audio connector on the front panel of the receiver-transmitter.

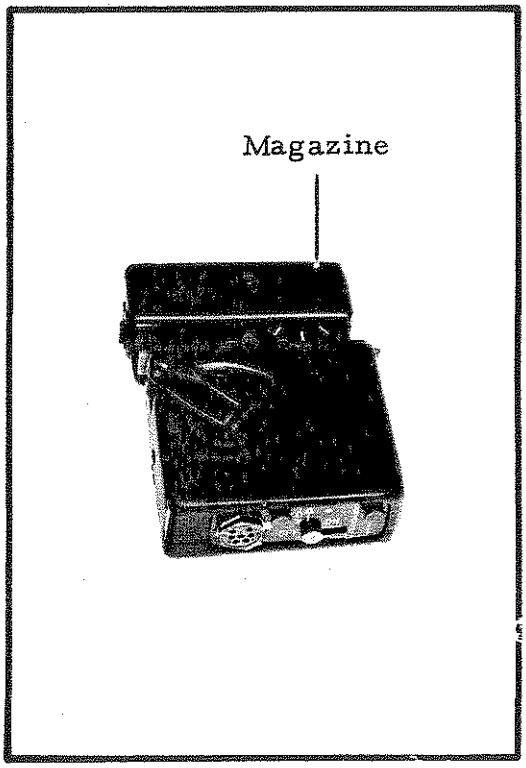

FIG 35
KEYER KE-8B

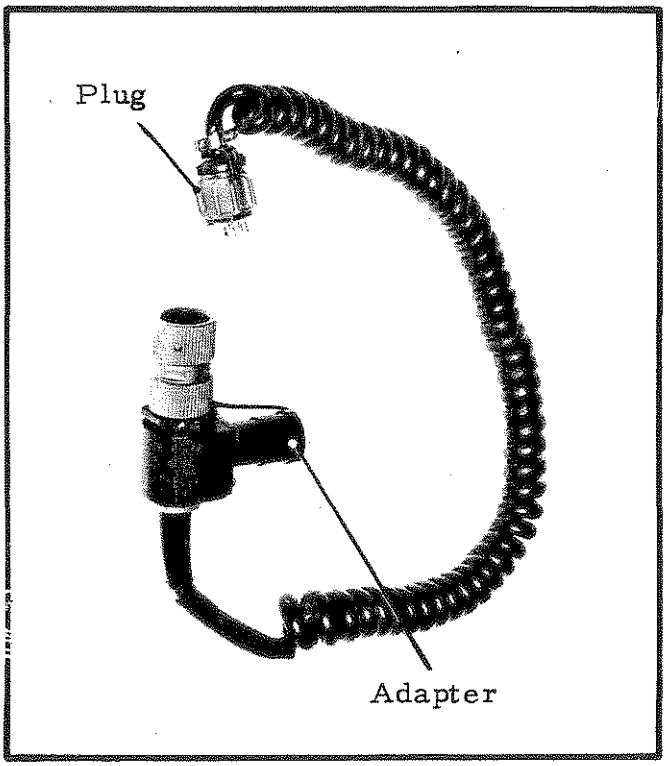

FIG 36
CABLE ASSEMBLY CX-F31

SECTION 12

RADIO SET, GRC-F2 SETTING UP PROCEDURE

Ground Station

90. The Conversion Kit, MK-M7 is provided to enable the manpack Radio Set PRC-F1 or F3 to be converted to a ground station Radio Set, GRC-F2. The procedure to be followed to convert the set from a manpack station (set operating) to a ground station is detailed in the succeeding paragraphs. The tuning sequence is given in Section 16, para 137.

91. Removal of Radio Set, PRC-F1 or F3 Components. Remove the equipment from the operator's back, and:

a. If desired, remove the receiver-transmitter from the harness.

b. Remove the Antenna, AS-F1 from the Coupler, CU-F1 or F1A1.

c. From the receiver-transmitter, remove the Coupler, Antenna, CU-F1 or F1A1, and disconnect any audio components not required for use in the ground station role.

d. Pack the removed/disconnected components in the accessory bags and fasten the bags.

92. Select the components required for use from the Conversion Kit, MK-F7 (normally stowed in the Case, Transit, CY-F2 and listed in Table 2).

93. Coupler Antenna, CU-F2. This coupler is connected to the receiver transmitter by either the Cable Assembly, Radio Frequency, CG-F1 or F2 (see para 94). Connect one end of the selected cable to the radio frequency connector located at the top left hand corner of the coupler front panel.

94. Cable Assembly, Radio Frequency, CG-F1 and F2. Connect one end of the selected cable to the radio frequency connector on the coupler front panel and the other end to the radio frequency connector on the receiver-transmitter front panel. The cables are approximately 66 cm and 15 m long respectively. The distance between the coupler and receiver-transmitter shall decide which cable is used.

95. Cable Assembly, Special Purpose, Electrical, Branched, CX-F15. The single end of this cable is connected to either one of the two five pin audio sockets on the receiver-transmitter front panel. It is only used in conjunction with the Key Telegraph, KY-116/U and the Headset, H-233/PRC.

96. Audio Components. These are the Key Telegraph, KY-116/U and the Headset, H-233/PRC. They can only be connected to the receiver-transmitter by inserting the plug on the integral cable of each component into the jack fitted in each of the two branched ends of the Cable Assembly, CX-F15 (see preceeding para). If desired audio components of the Radio Set, PRC-F1 or F3 can be used as described in para 79 and 80, and as illustrated in the ground station in Fig 32 (Handset, H-F2).

97. Antennae - The selection of antenna type, dipole or end fed wire, and the method of erection of the antennae are given in Chapter Four. The four terminals located on the front panel of the coupler (refer Fig 37) are:

a. Spring Loaded Terminal. Terminal for ORANGE wire from end fed wire antenna (Antenna, AS-F3 or AS-F4).

b. Two RED Terminals. Terminals for two feeder leads of Antenna Feeder Assembly.

c. BLACK Earth Terminal. Terminal for GREEN wire from Counterpoise Antenna or other earth connection. When using dipole antenna do NOT use Counterpoise Antenna or earth connection and ENSURE that the case of the set is isolated from earth.

98. The ground station is powered by the internal Battery, Storage, BB-F1.

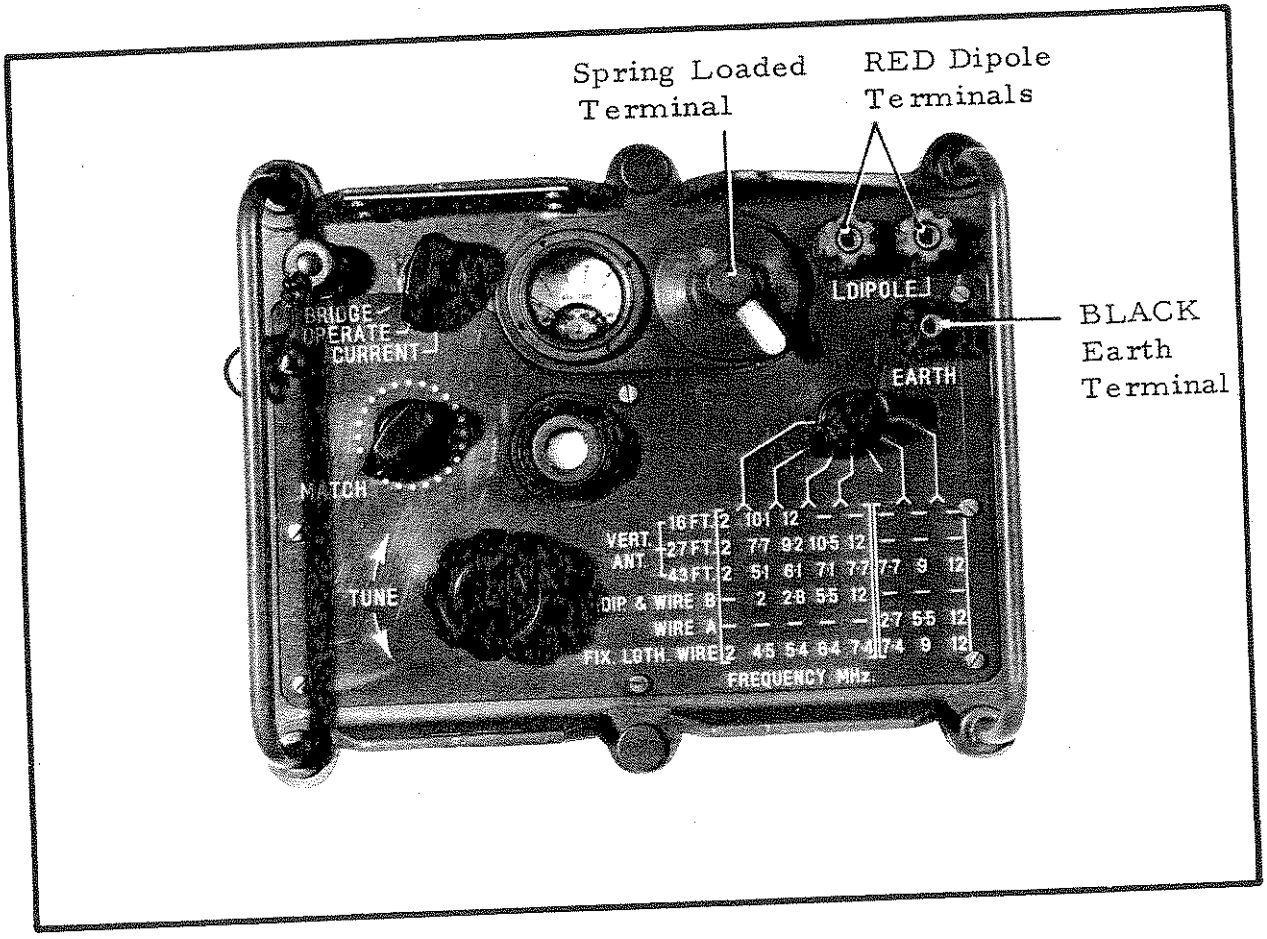

FIG 37
ANTENNA AND EARTH TERMINALS

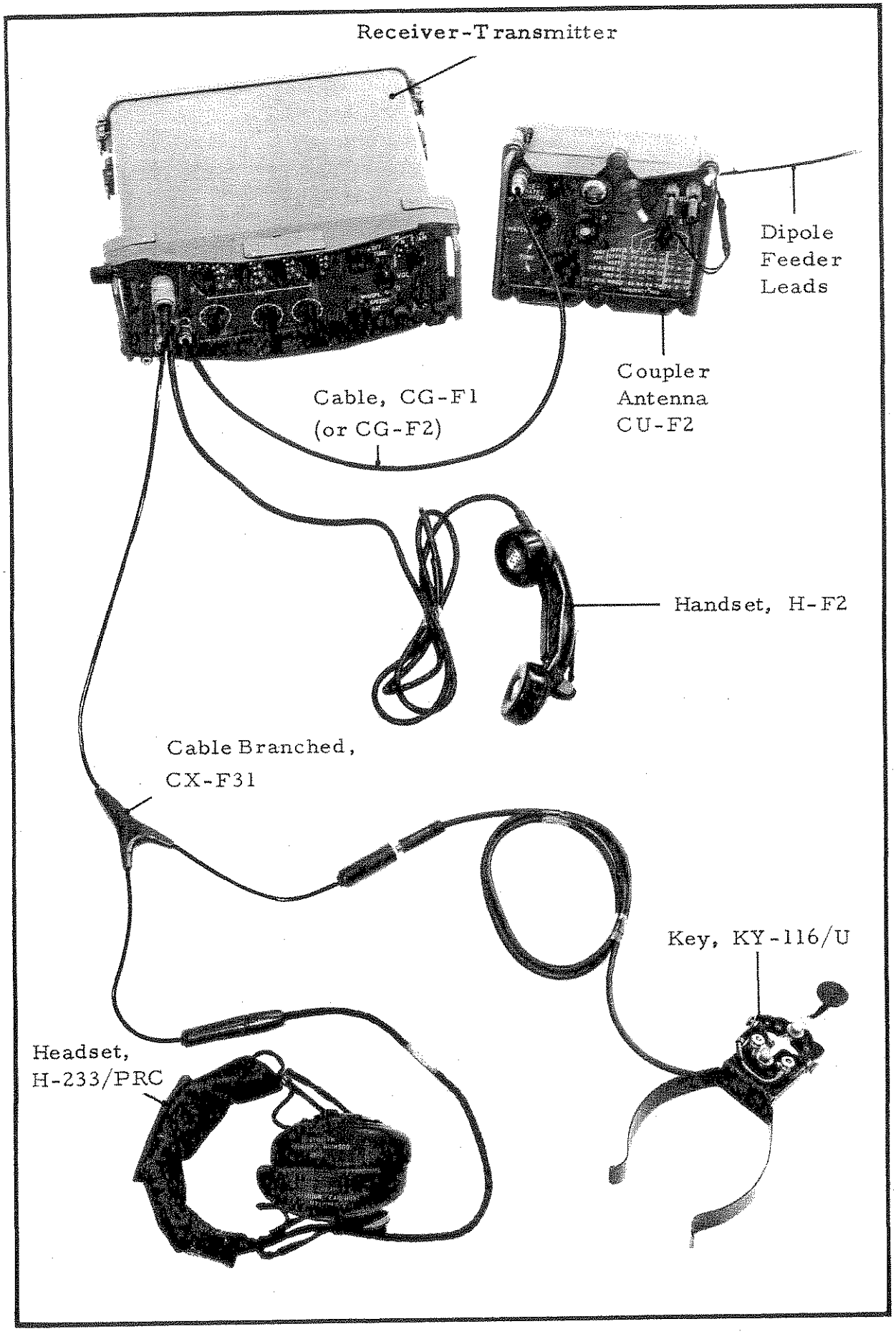

FIG 38
RADIO SET, GRC-F2

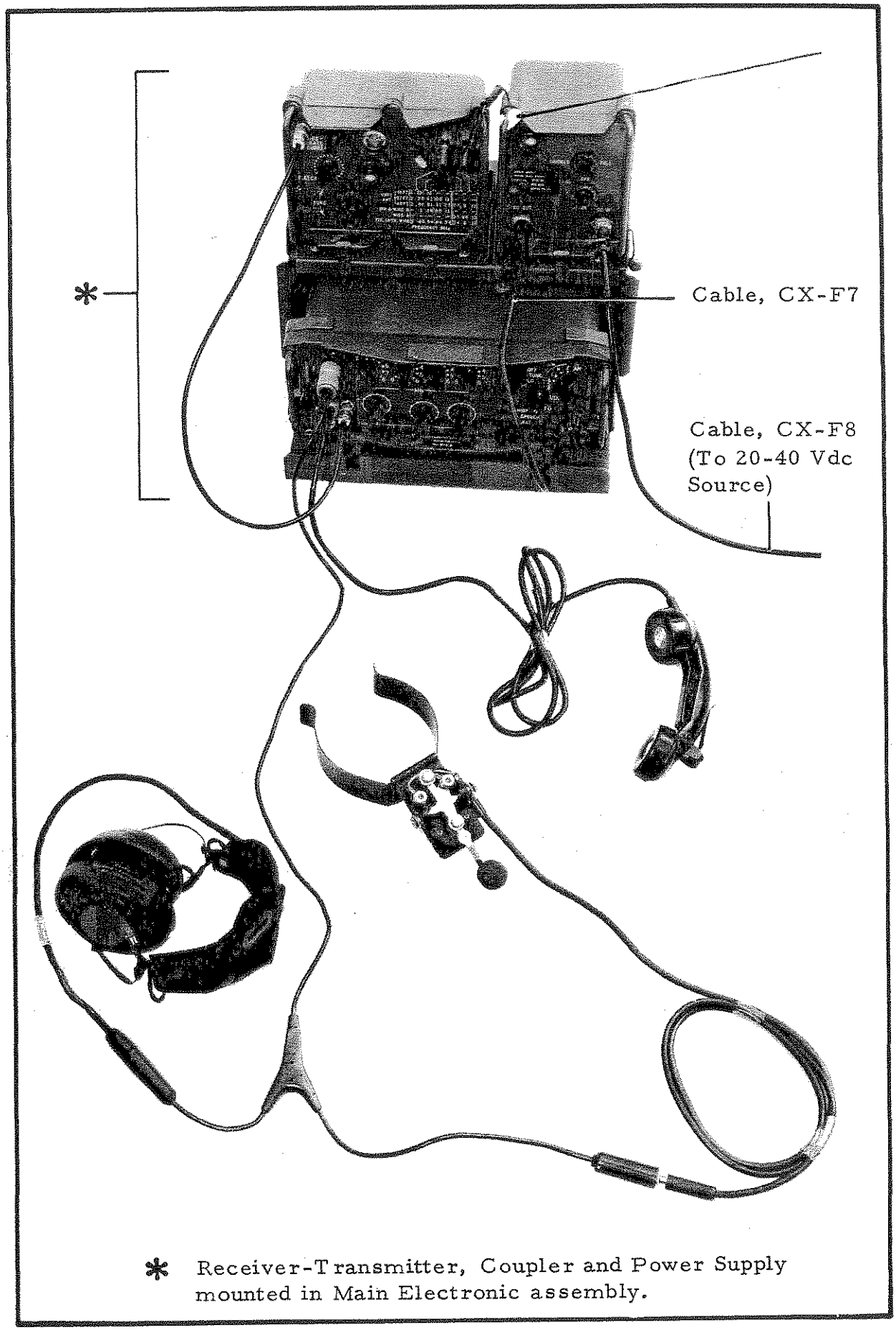

FIG 39
PERMANENT GROUND STATION

99. A more permanent ground station (Refer Fig 39) can be set up by using components of the Installation Kit, Electronic Equipment, MK-F8. These are:

a. Bases, Shock Mount, Electrical Equipment, MT-F2, F3 and F4;

b. Power Supply, PP-F1;

c. Cable Assemblies, Special Purpose, Electrical, CX-F7 and Branched, CX-F8; and

d. Any 20-40 Vdc power source.

CAUTION

Do NOT attempt to power the receiver-transmitter by any means other than:

a. The internal Battery, Storage, BB-F1, or

b. The Power Supply, PP-F1 whose input is connected to a 20-40 Vdc source.

100. The assembly of the bases (main electronic assembly) and the power connections to be made are detailed in Section 13. The receiver-transmitter, coupler and power supply can be mounted in the main electronic assembly as for a vehicle installation (see para 106h) and a good antenna and earth system installed. The operating sequence is given in para 137.

FIG 40
CABLING DIAGRAM
(NOT TO SCALE)

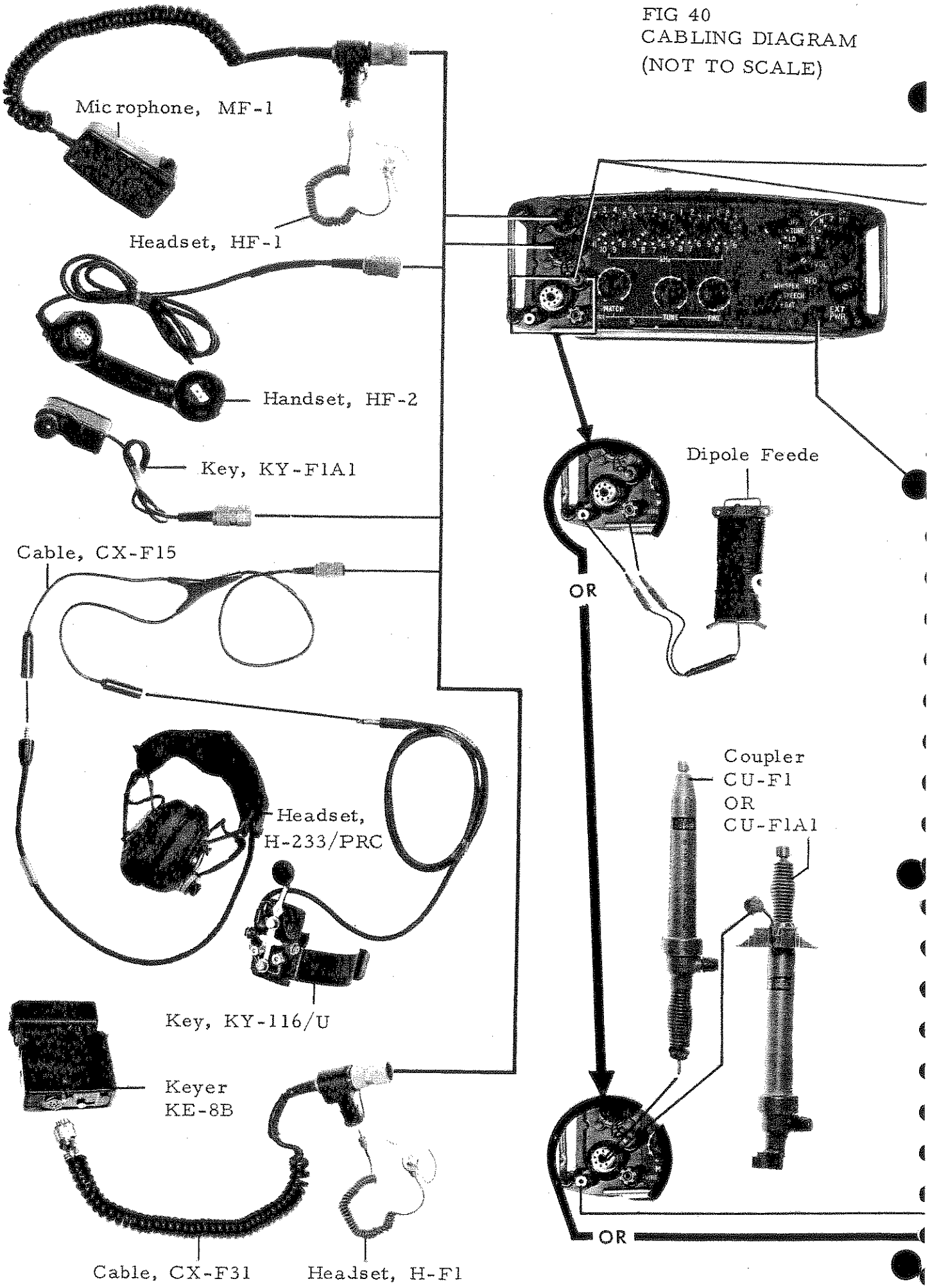

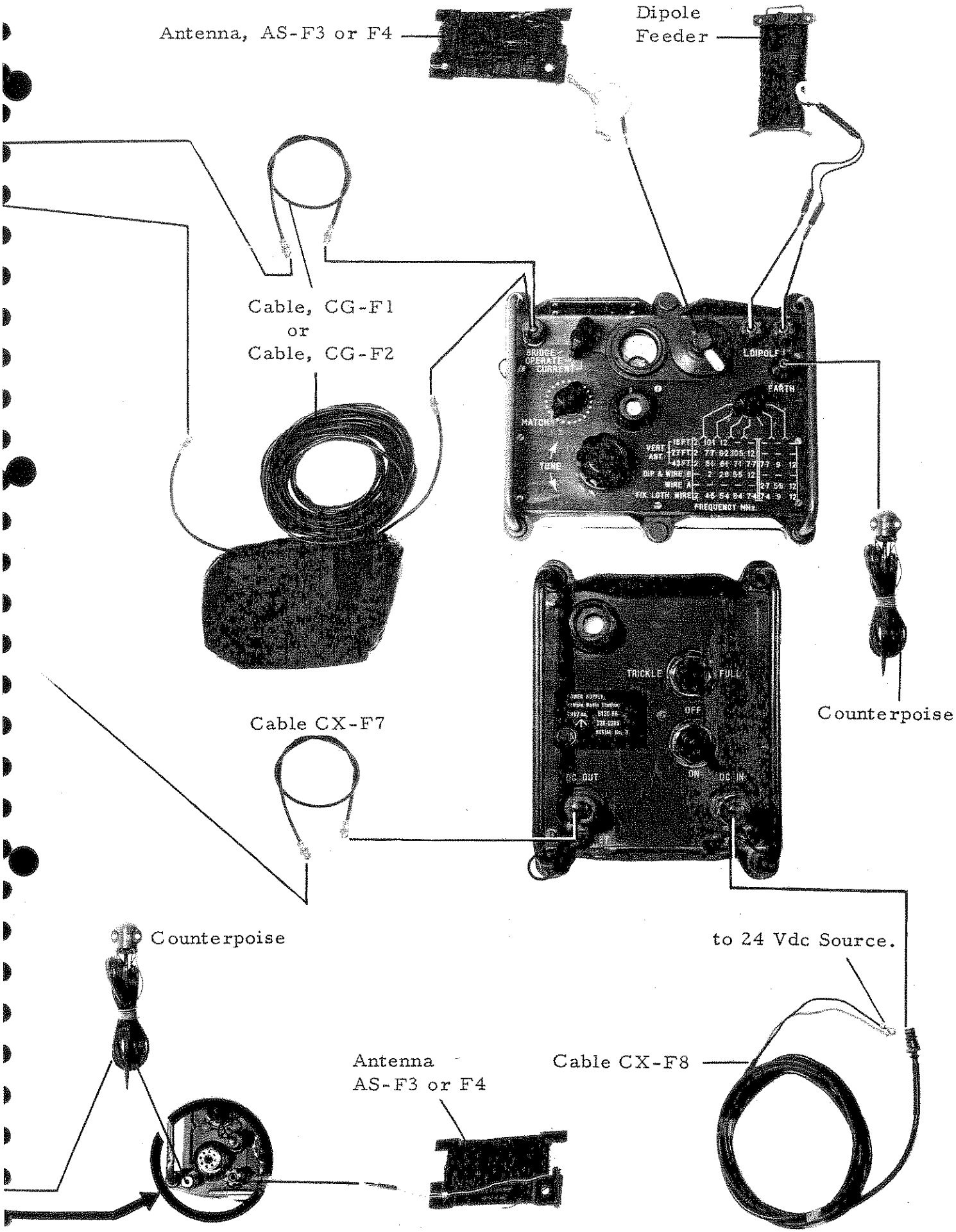
Antenna, AS-F3 or F4
Dipole
Feeder
Cable, CG-F1
or
Cable, CG-F2
BRIDGE
OPERATE
CURRENT
MATCH
TONE
LOIPOLE
EARTH
FREQUENCY MHz
TRICKLE
FULL
OFF
ON
DC OUT
DC IN
Counterpoise
Cable CX-F7
Counterpoise
to 24 Vdc Source.
Antenna
AS-F3 or F4
Cable CX-F8

SECTION 13

RADIO SET, GRC-F2 CONVERSION FROM GROUND TO MOBILE STATION

A - GENERAL

General

101. The Installation Kit, Electronic Equipment, MK-F8 is a general purpose installation kit. Utilizing this kit, the ground station Radio Set, GRC-F2 can be installed as a mobile station in covered trucks, personnel carriers and watercraft.

The general installation procedures to be followed are defined in:

a. Sub-Section B - Installation in Vehicles

b. Sub-Section C - Installation in Watercraft.

B - INSTALLATION IN VEHICLES

Equipment Location

102. Some general rules for deciding the best location for components of the station are:

a. The antenna base should be mounted as high as possible and where there is no likelihood of the antenna contacting the vehicle chassis.

b. The vehicle should be checked for maximum vibration areas and these areas avoided as mounting areas for the receiver-transmitter.

c. Mount the receiver-transmitter on a firm, level surface within reach of the 24 V dc power source (the connecting cable is 4.4 m long), and as near to the antenna base as practicable.

d. In all cases every effort should be made to cater for Operator and User Requirements (convenience and accessibility) but not at the expense of technical efficiency.

103. The mounting hardware provided in the installation kit MK-F8 is listed in detail in Table 7. In the procedures described in this section items of Table 7 are referred to by serial number, or, by a shortened designation and a serial number. In both cases the serials cited are serials of Table 7, as are also the identifying item numbers used in illustrations (Fig 41 to 44).

TABLE 7—MOUNTING HARDWARE

Ser	Ref Fig No	Designation	Qty	Purpose
		HARDWARE KIT, ELECTRONIC EQUIPMENT MK-F1		
		BOLTS, Hex Hd, MS, Cad Pl, $\frac{1}{4}$ in 20 UNC:		
1	41	x$\frac{3}{4}$ in long	4	To bolt Base MT-F2 to its mounting surface. (Method 1).
2	41	x1$\frac{3}{4}$ in long	4	
3	41	SET SCREWS, Hex slotted head, MS, Cad Pl, $\frac{1}{4}$ in - 20 UNC x $\frac{1}{2}$ in long	4	Alternative mounting (Method 2).
4	41	WASHERS, Flat, Steel, Rd, Cad Pl, $\frac{1}{4}$ in ID	4	Used with both Methods 1 and 2
5	41	WASHERS, Lock, spring steel, Cad Pl, single turn, $\frac{1}{4}$ in ID	4	
6	41	SCREWS, Cheese head, MS, Cad Pl, 2BA x 5/8 in long	8	To secure Bases, MT-F3 and F4 to the top of Base MT-F2.
7	41	WASHERS, Flat, steel, rd, Cad Pl, 2BA	8	
		EARTHING KIT, MK-F3		
		EARTH STRAP:		
8	42	22$\frac{1}{2}$ in, one spade end, one holed end (5/16 in hole)	1	Earth connection to Coupler Antenna, CU-F2
9	42	12 in (5/16 in hole both ends)	1	Extension earth strips if required
10	42	24 in (5/16 in hole both ends)	1	

TABLE 7 (cont)

Ser	Ref Fig No	Designation	Qty	Purpose
		BOLTS, Hex Hd, MS, Cad Pl, $\frac{1}{2}$ in - 20 UNC:		
11	42	x $\frac{3}{4}$ in long	3	
12	42	x $1\frac{3}{4}$ in long	3	To bolt earth straps together and to the vehicle chassis.
13	42	NUTS, Hex MS, Cad Pl, $\frac{1}{4}$ in - 20 UNC	3	
		WASHERS:		
14	42	Flat, steel, rd, Cad Pl, $\frac{1}{4}$ in ID	3	
15	42	Lock, spring steel, Cad Pl, single turn, $\frac{1}{4}$ in ID	3	
		CABLE SUPPORT KIT, MK-F4		
16	42	INSULOID "PLASKLIP" type NX2, high duty cable clips	6	To clamp Cable CX-F8 for securing to the vehicle
17	41	SCREWS, Cheese Head, MS, Cad Pl, 4BA x $\frac{1}{2}$ in long	6	To secure cable clips to the vehicle
18	42	NUTS, Hex Hd, MS, Cad Pl, 4BA	6	
19	42	WASHERS, Lock, spring steel, Cad Pl, single turn 4BA	6	
20	42	SCREWS, Steel, Cad Pl, Self Tapping, pan head, 8 Gauge x $\frac{1}{2}$ in long	6	Alternative means of securing cable clips
		GROMMETS:		
21	42	1/16 in groove x 5/16 in hole	1	To protect the Cable where it passes through partitions or bulkheads
22	42	1/8 in groove x 5/16 in hole	1	
23	42	1/4 in groove x 5/16 in hole	1	

TABLE 7 (cont)

Ser	Ref Fig No	Designation	Qty	Purpose
		HARDWARE KIT, ELECTRONIC EQUIPMENT MK-F2		
24	43	BOLTS, Hex Hd, MS, Cad Pl, 5/16 in - 18 UNC x 1 in long	6	To bolt Base, AB243/C to the vehicle
25	43	NUTS, Hex, MS, Cad Pl, 5/16 in - 18 UNC	6	
		WASHERS:		
26	43	Flat, steel, rd, Cad Pl, 5/16 in ID	6	
27	43	Lock, spring steel, single turn, 5/16 in ID	6	
		GROMMET:		
28	43	1/16 in groove x 5/16 in hole	1	To provide entry for Wire, Electrical, (Coupler to Antenna Base)
29	43	1/8 in groove x 5/16 in hole	1	
30	43	1/4 in groove x 5/16 in hole	1	
31		CEMENT, Waterproof Tube	1	To seal grommet and cable against water entry.
		LEAD-IN SUPPORT KIT, MK-F5		
32	43	"INSULOID" CRADLES, type C1	6	To support Wire Electrical PVC (Coupler to Antenna Base) where necessary
33	43	"INSULOID" CLIPS, type R1		
34	43	SCREWS, Cheese head, MS, Cad Pl, 4BA x 1 in long	6	To secure insuloid Cradles to vehicle where required
35	43	NUTS, Hex, MS, Cad Pl, 4BA	6	
36	43	WASHERS, Lock, spring steel, Cad Pl, single turn, 4BA	6	
37	43	SCREWS, Steel, Cad Pl, Self-tapping, binding head, 8 Gauge x $\frac{1}{2}$ in long	6	

TABLE 7 (cont

Ser	Ref Fig No	Designation	Qty	Purpose
38	43	AUDIO ACCESSORY MOUNTING KIT, MK-F6 HOLDER	2	Fixtures from which to hang Handset, H-F2 and Microphone Dynamic, M-F1
39	44	SCREWS, Countersunk Head, MS, Cad Pl, 4BA x $\frac{1}{2}$ in long	8	To secure holders where necessary
40	44	NUTS, Hex, MS, Cad Pl, 4BA	8	
41	44	WASHERS, Lock, Steel, Cad Pl, single turn 4 BA	8	
42	44	SCREWS, Self Tapping, binding Head, Cad Pl, 8 Gauge x $\frac{1}{2}$ in long	8	

Main Electronic Assembly

104. This assembly consists of the Bases, Shock Mount, Electrical Equipment, MT-F2, F3 and F4 assembled as a composite unit for mounting the Receiver-Transmitter, Coupler, Antenna, CU-F2 and the Power Supply, PP-F1.

105. The assembly can be secured to the mounting surface by one of two methods (see Fig 41). These are:

a. Method 1. By inserting the four securing bolts upwards through holes drilled in the mounting surface and screwing them into the Nylon clinch nuts fitted to the base plate, or

b. Method 2. By inserting the four set screws downwards through the holes provided in the base plate and screwing them into tapped holes in the mounting surface.

106. To mount the assembly by Method 1:

a. Remove the base plate from the Base MT-F2 by unscrewing the four countersunk head screws from the underside.

b. Place the base plate in the selected position and mark the position of the holes (to be drilled) through the four Nylon clinch nuts.

c. Drill four 5/16 in holes in the positions marked.

d. Re-attach the base plate to the Base, MT-F2.

e. Using the screws and washers provided (Serials 6 and 7) secure Bases, MT-F3 and F4 to the top of Base, MT-F2 by inserting the screws through the washers, and the holes provided in the Bases, MT-F3 and F4 by screwing them downwards into the clinch nuts fitted in the top of the Base, MT-F2,

f. Place the assembly in position over the four drilled holes.

g. Select four bolts according to the thickness of the mounting surface (Serial 1 or 2). Insert the selected bolts through the washers (Serial 4 and 5) upwards through the holes, and screw them into the Nylon clinch nuts fitted to the base plate.

h. Mount the Receiver-Transmitter, Coupler, Antenna, CU-F2, and the Power Supply PP-F1 into their respective bases and secure in position with the screw clamps (See Fig 40).

107. To mount the assembly by Method 2:

a. As for para 106a.

b. As for para 106b but mark the positions through the holes adjacent to the Nylon clinch nuts.

c. Drill and tap four holes for 1/4 in - 20 UNC. The holes should be tapped to give at least 3/8 in of effective thread length.

d. As for para 106d, e and f.

e. Insert the four set screws (Serial 3) through the washers (Serial 4 and 5) and the holes in the base plate. Screw the set screws into the tapped holes.

f. As for para 106h.

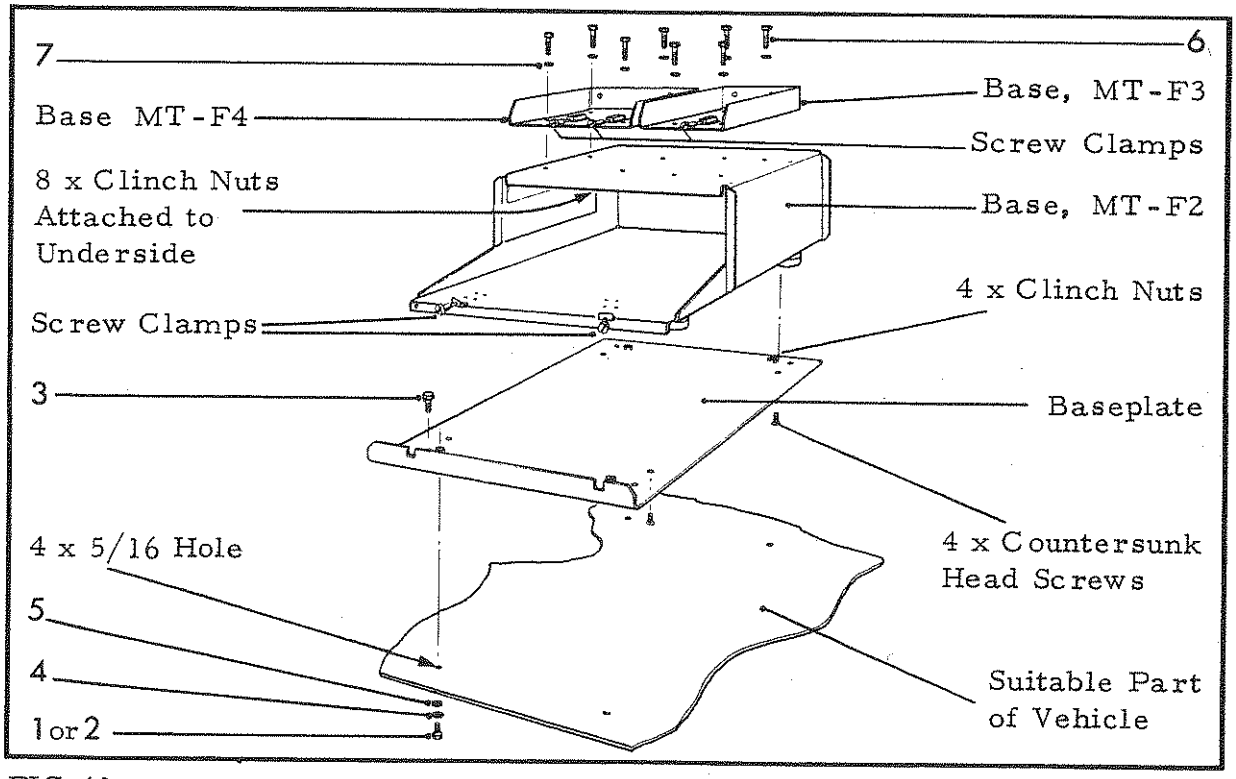

FIG 41
MAIN ELECTRONIC ASSEMBLY

108. Earth Connection (Fig 42). To earth the installation:

a. Clamp the spade end of the strap (Serial 8) beneath the EARTH terminal of the Coupler, Antenna, CU-F2.

b. Drill a 5/16 in hole in the nearest convenient grounded portion of the vehicle frame. Clean away any impediment to a good electrical connection from the surrounding area.

c. If necessary the straps (Serial 9 and 10) may be used to extend Serial 8.

d. The bolts, nuts and washers (Serial 11 to 15) are provided to bolt the earth straps together and to the vehicle frame.

109. Power Connections (Fig 42). These connections are made using Cable Assemblies, Special Purpose, Electrical, CX-F7 and Branched CX-F8 by:

a. Connecting the Cable, CX-F7 from the EXT PWR connector on the Receiver-Transmitter front panel to the DC OUT TO R/T SET connector on the Power Supply, PP-F1 front panel;

b. Connecting the Cable, CX-F8 to the DC IN 20-40 V connector on the Power Supply PP-F1 front panel;

c. Running the Cable, Branched, CX-F8 to the 24 V battery, securing it to the vehicle where necessary with the clips and fixing hardware (Serial 16 to 20) provided; and

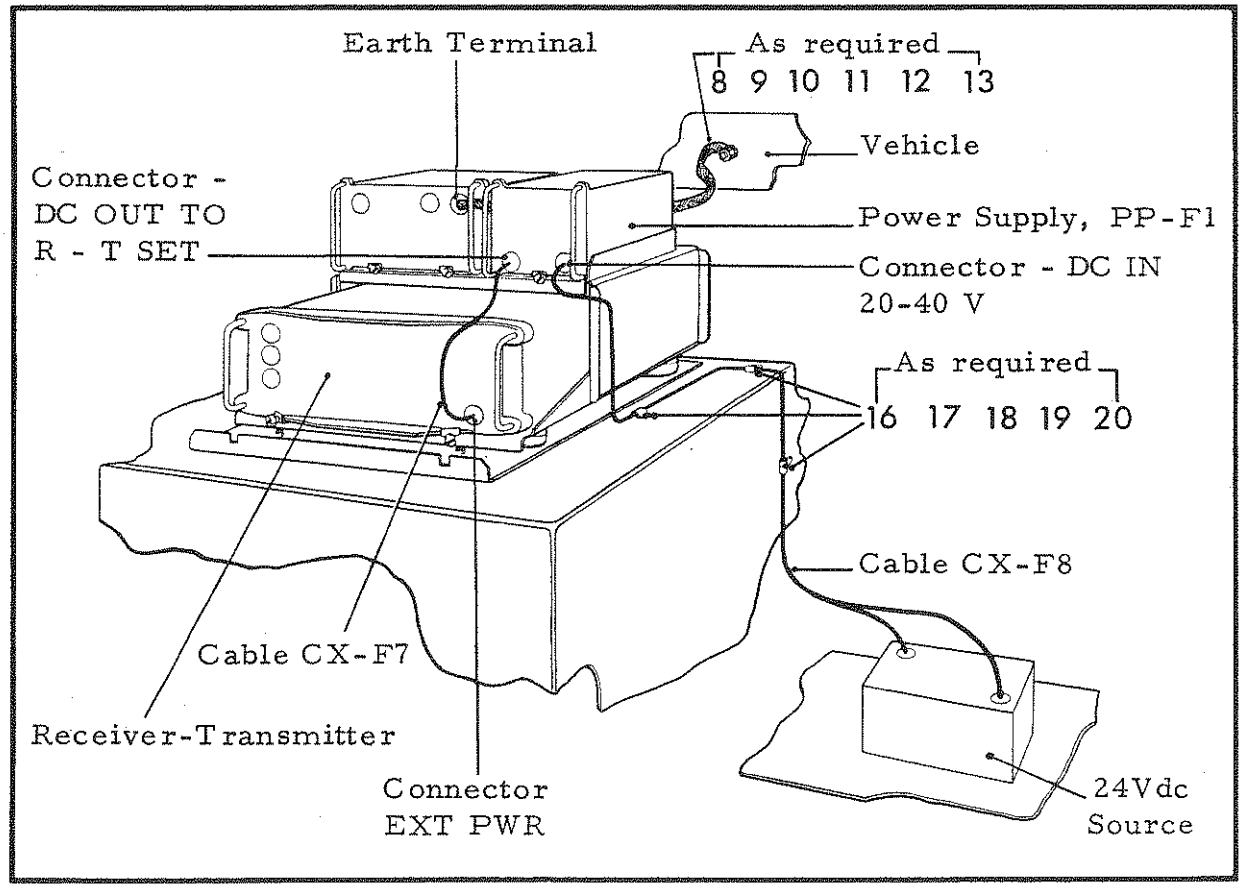

FIG 42
EARTH AND POWER CONNECTIONS

d. Where it is necessary to pass through a partition use a suitable grommet (Serial 21 to 23) to protect the cable.

Installation of Antenna System

110. Base Antenna, AB243/C (Fig 43). This base is secured to the vehicle in the most suitable position (refer para 102) by:

a. Using the base as a template to mark the position of the six mounting holes.

b. Drilling 5/16 in holes in the positions marked.

c. Using the bolts, nuts and washers (Serials 24 to 27) bolt the base in position.

d. Drill the entry hole for the Wire Electrical PVC Sheathed (Coupler Antenna to Antenna Base). It may be more convenient to drill this hole before bolting the base to the vehicle.

111. Mast Base, AB 652/VR. To clamp this mast base to the Base Antenna, AB 243/C; first separate the three pieces of the mast base, and:

a. Insert the lower plastic insulating piece through the hole in the Base Antenna, AB243/C from underneath.

b. Fit the upper plastic insulating piece over the protruding portion of the lower plastic piece, and

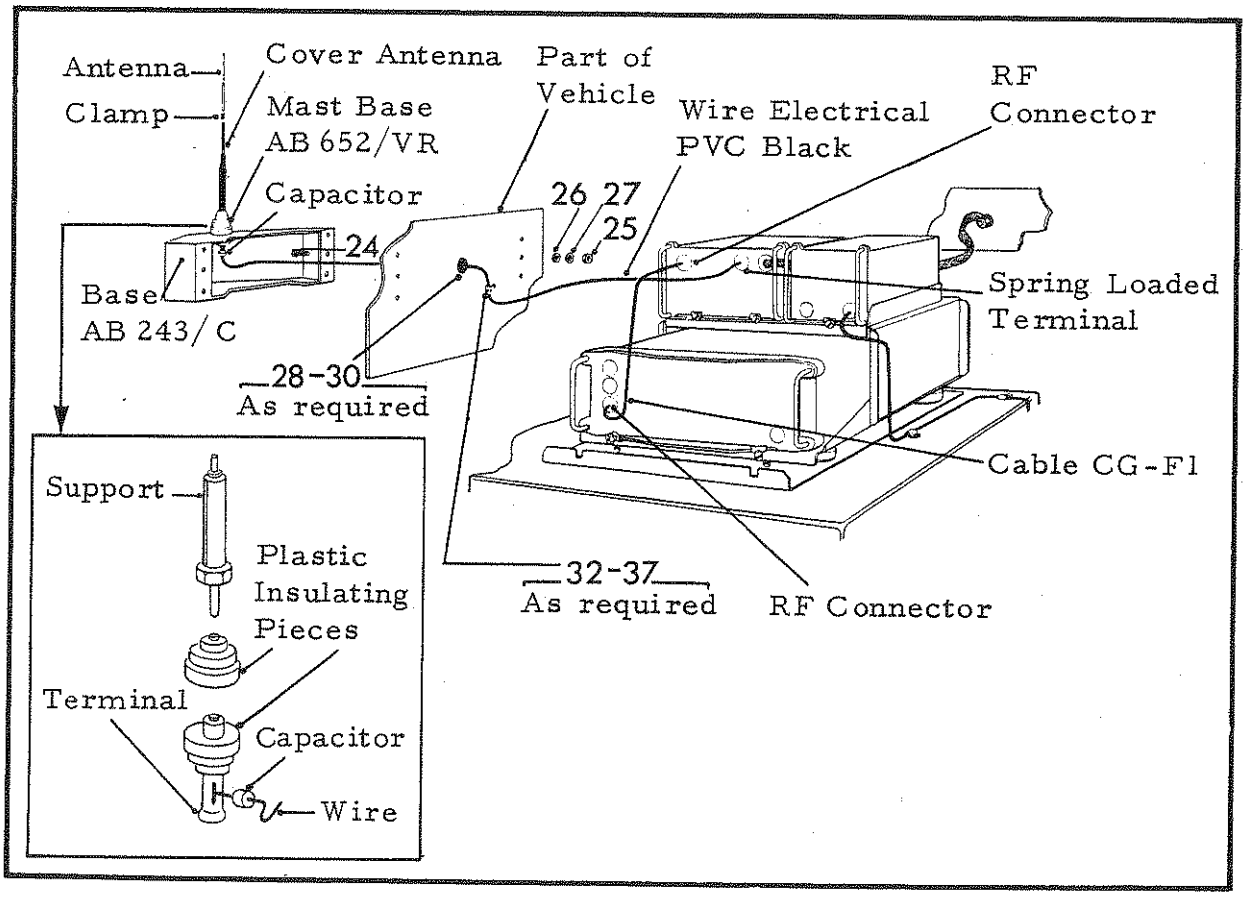

FIG 43
ANTENNA SYSTEM

c. Insert the antenna support down through the upper plastic piece, engaging the threaded core of the bottom piece and screw it down tight.

112. Capacitor, Fixed, Ceramic Dielectric, Modified. Fit this capacitor to the terminal at the bottom of the Mast Base, AB 652/VR and tighten the terminal.

113. Wire Electrical PVC, Black (Fig 43). Fit the most suitable grommet (Serial 28 to 30) in the entry hole and run the wire by the shortest possible route between the capacitor (para 112) and the spring loaded end fed connector on the Coupler Antenna, CU-F2, and:

a. Use the cable lug to attach the wire to the capacitor,

b. Cut the wire to the required length,

c. Bare and tin the cut end,

d. Insert the tinned end into the spring loaded end fed connector on the Coupler Antenna, CU-F2, and

e. If the wire needs support use the cradles, clips and fixing hardware provided (Serial 32 to 37).

114. Cable Assembly, Radio Frequency, CG-F1. (Fig 43). Connect one end of this cable to the RF connector on the front panel of the receiver-transmitter, and the other end to the RF connector on the front panel of the Coupler Antenna CU-F2.

115. Vertical Antenna 4.8 m. This antenna consists of three Antenna Elements, MS-116A, one MS-117A and one MS-118A. Screw:

a. two elements MS-116A together,

b. element, MS-117A into the top element MS-116A,

c. element, MS-118A into the MS-117A,

d. the third element MS-116A into the Mast Base, AB 652/VR and slide the Cover Antenna down over the element and the Antenna Support as far as it will go.

e. Secure the Cover Antenna in place with the Antenna Sheath Clamp Brass at the top of the Cover Antenna.

f. Screw the assembled elements into the element MS-116A attached to the Mast Base.

116. Audio Accessories (Fig 44). Mount the two holders (Serial 38) in a convenient position using the fixing hardware provided (Serial 39 to 42).

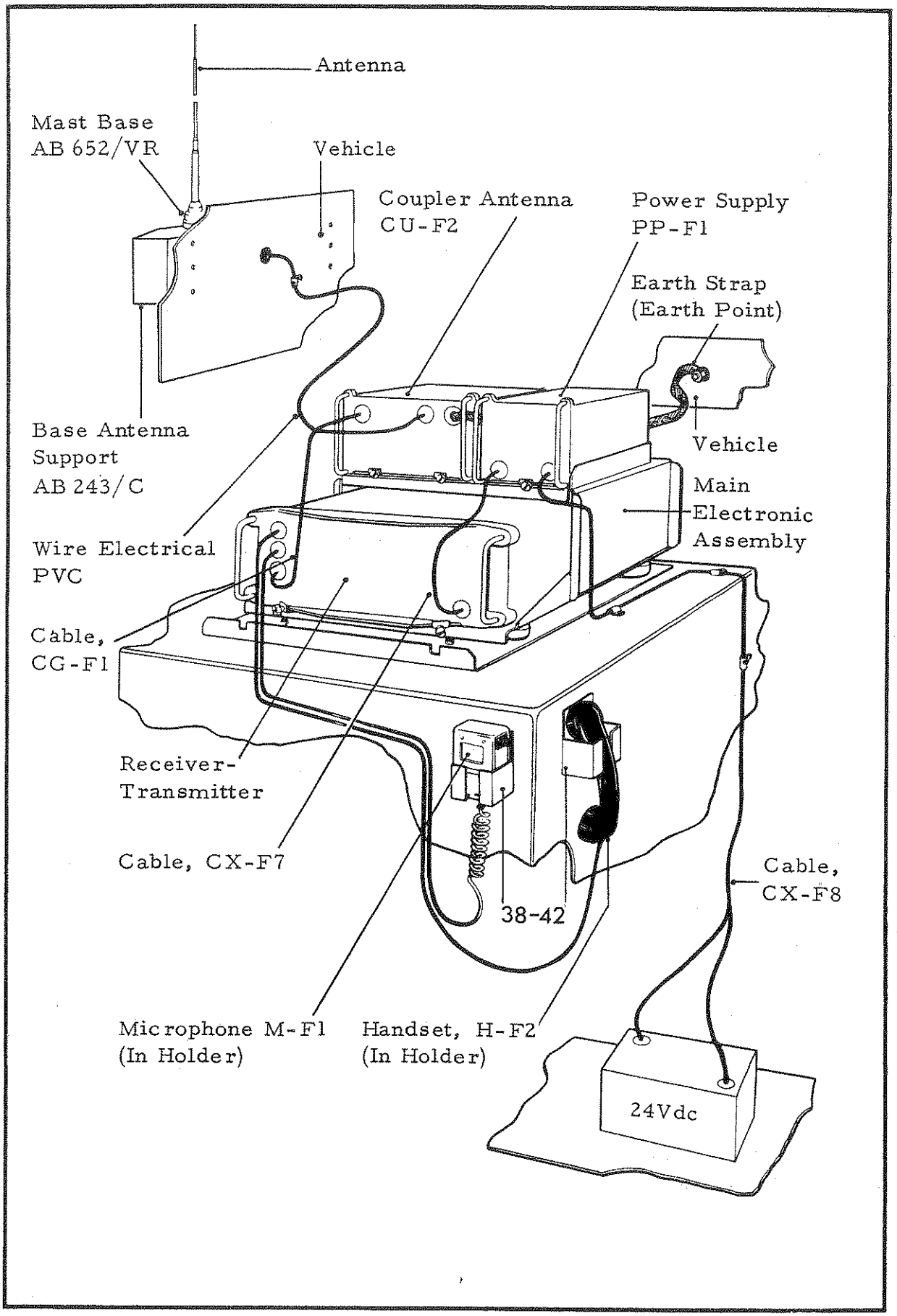

FIG 44
MOBILE INSTALLATION -
ARRANGEMENT

C - INSTALLATION IN WATERCRAFT

General

117. Watercraft and vehicular installations are similar in most respects. The general rules given (para 102) for deciding the best location for components of the vehicle installation apply equally to installation in watercraft.

118. The Coupler Antenna, CU-F2 must be mounted close enough to the Mast Base, AB652/VR to allow interconnection with the Wire Electrical, PVC.

119. If the available space will not permit the Receiver-Transmitter, Coupler Antenna, and Power Supply to be mounted together, the Receiver-Transmitter and the Power Supply may be mounted elsewhere in the craft, and the Cable Assembly, Radio Frequency, CG-F2, (15 m long) used to interconnect the Receiver-Transmitter and the Coupler Antenna.

Earth Connections

120. Watercraft with Non-Metallic Hulls. In this type of craft the earthing procedure is similar to that detailed in para 108. The earth strap from the EARTH terminal of the Antenna Coupler should be connected to the best available metal earthing point.

121. Watercraft with Metallic Hulls. In this type of craft great care should be taken to ensure that neither side of the dc power supply is connected to the metal hull. This is important as any electric current passing through the hull is likely to cause potential differences between parts of the hull and result in greatly increased corrosion of some areas. The Radio Set, GRC-F2 is wired for a negative earthed system and must be isolated from the hull from the dc point of view. All components of the installation including the mounting bases and cables must be electrically isolated from the hull. The earth strap from the EARTH terminal of the Coupler Antenna must be connected through a dc isolating capacitor to a suitable earthing point connected to the metal hull. The capacitor should be 1000 pF with a rated working voltage of 5 to 10 kV eg, Ducon, Mica Capacitor, Type MF821, 1000 pF, 8000 V peak. The Capacitor, Fixed, Ceramic, Dielectric Modified is also suitable.

122. Permanent Installations. For a permanent installation it is recommended that a special rod antenna which has been designed specifically for marine purposes be used. Such antennae of heavily reinforced fibreglass construction and some 4.8 m in length are available, eg, Antenna Fibreglass, Hawker Siddeley, MT 122UL and accessories. These antennae have advantages, in that, they are rugged, corrosion resistant, and are suitable for use with the Radio Set, GRC-F2.

SECTION 14
OPERATING INSTRUCTIONS-GENERAL

123. This section describes the facilities, and operating procedures that are common to the Radio Sets, PRC-F1, F3 and the Radio Set, GRC-F2 (in either the ground or mobile station role).

124. Mode Selection. Selection of the mode of operation is made by turning the five position mode switch to the position (mode) required. The positions are designated:

a. SSB. While either SSB or AM may be used for speech, the SSB mode is preferable when working with other PRC-F1 units or other equipments having an SSB facility.

b. CW1. Used for transmitting and receiving morse signals using a 2 kHz tone. In this mode speech will be received but not transmitted.

c. CWN. This mode is similar to CW1, but the received signal is passed through a narrow band pass filter, thus reducing interference. Owing to its extreme selectivity, this mode is only practicable when working with other PRC-F1 units or other equipments of comparable frequency accuracy and stability.

d. CW2. In this mode the receiver output tone is produced by an adjustable beat frequency oscillator (BFO). It is useful when the received signal is not precisely on the assigned frequency.

e. AM. This mode is used when working with other equipments having an AM facility (see para 126).

Setting the Assigned Frequency

125. To set the receiver-transmitter on the assigned frequency:

a. Convert the assigned frequency to kilohertz, eg, 2.9 MHz = 2900 kHz 11.832 MHz = 11832 kHz.

b. Set the frequency using the four kHz switches beginning with the left hand switch. If the assigned frequency has five digits (higher than 9999 kHz) the first two digits (10 or 11) are set on the left hand switch. The switch settings for 2900 and 11832 kHz are shown in Fig 45.

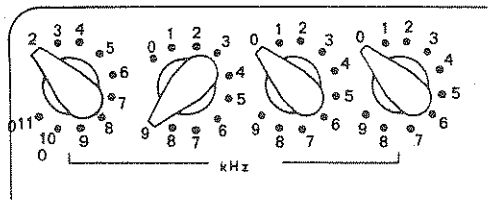

Assigned frequency 2.9 MHz

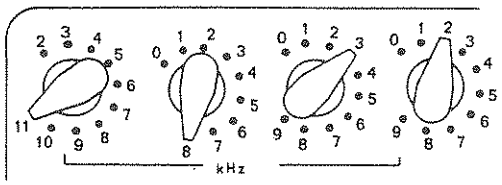

Assigned frequency 11.832 MHz

FIG 45
SWITCH SETTINGS

126. Under the assigned frequency system of channel allocation, the frequency as set on the receiver-transmitter (see para 125) corresponds to the approximate centre of the radiated frequency spectrum. In the AM (double sideband) and CW modes, the assigned frequency corresponds to the carrier frequency. When transmitting in the SSB mode, the upper sideband only is radiated and the frequency corresponding to a 2 kHz tone on the upper sideband is taken as the nominal centre of the radiated SSB.

Reduced Power Facility

127. The receiver-transmitter can be operated on LO (reduced) power; this method of operation should be used whenever possible, particularly when working at close range as it conserves battery life and reduces the possibility of interference with other radio sets.

128. On high (HI) power the transmitter output is approximately 10 W on SSB or AM and 5 W on CW. On reduced (LO) power the output is approximately 1 W on all modes. For a receive-transmit ratio of 10:1 the battery endurance on HI power is 6 h and on LO power 24 h.

129. Whisper-Speech Facility. In this context Whisper means low level speech. The whisper facility enables the radio set to be used when it is desirable that sound be kept to a minimum. When the three positions switch is set to the WHISPER position low level speech will fully modulate the transmitter, but the SPEECH position should be used where possible, since background noise is thereby reduced.

130. Sidetone. Sidetone is present in the receiver-transmitter audio output on all modes of transmission, for monitoring purposes and to provide a check of transmitter serviceability. On the CW modes a 2 kHz sidetone is heard, and on SSB and AM the speech is heard. On all modes the sidetone is present only when the transmitter is actually radiating.

SECTION 15
OPERATING INSTRUCTIONS
RADIO SETS PRC-F1 AND F3

131. This section details the method of tuning and operating the Radio Sets, PRC-F1 or F3 using the Antennae AS-F1 and F2. It is assumed that the setting up procedure (including the installation and checking of an internal battery) given in Section 11 has been carried out.

132. The methods of tuning the Radio Sets, PRC-F1 or F3, using the Antennae, AS-F1 (Vertical Whip) and AS-F2 (Dipole) are given in Tuning Sequences A and B respectively. The procedure for using the high speed burst keying facility available on the Radio Set, PRC-F3 is given in Sequence C.

NOTE

The operation and maintenance of the Coder-Burst, Transmission Group, AN/GRA-71 is not covered in this handbook. These are fully described in 'TM-11-5835-224-12 Operator and Organizational Maintenance Manual Coder-Burst, Transmission Group, AN/GRA-71'.

133. Sequence C makes reference only to the operation of those controls etc used when employing the high speed burst transmission facility.

134. The procedure to be followed to prepare the radio set for operation using this facility is given in Section 11.

135. To operate the set as a ground station using the Antenna, AS-F2, remove the Antenna AS-F1 and the Coupler Antenna, CU-F1 or CU-F1A1. ENSURE that the case of the Receiver-Transmitter is isolated from earth and do NOT use an earth connection or the Counterpoise Antenna. Erect and connect the antenna as described in Chapter 4.

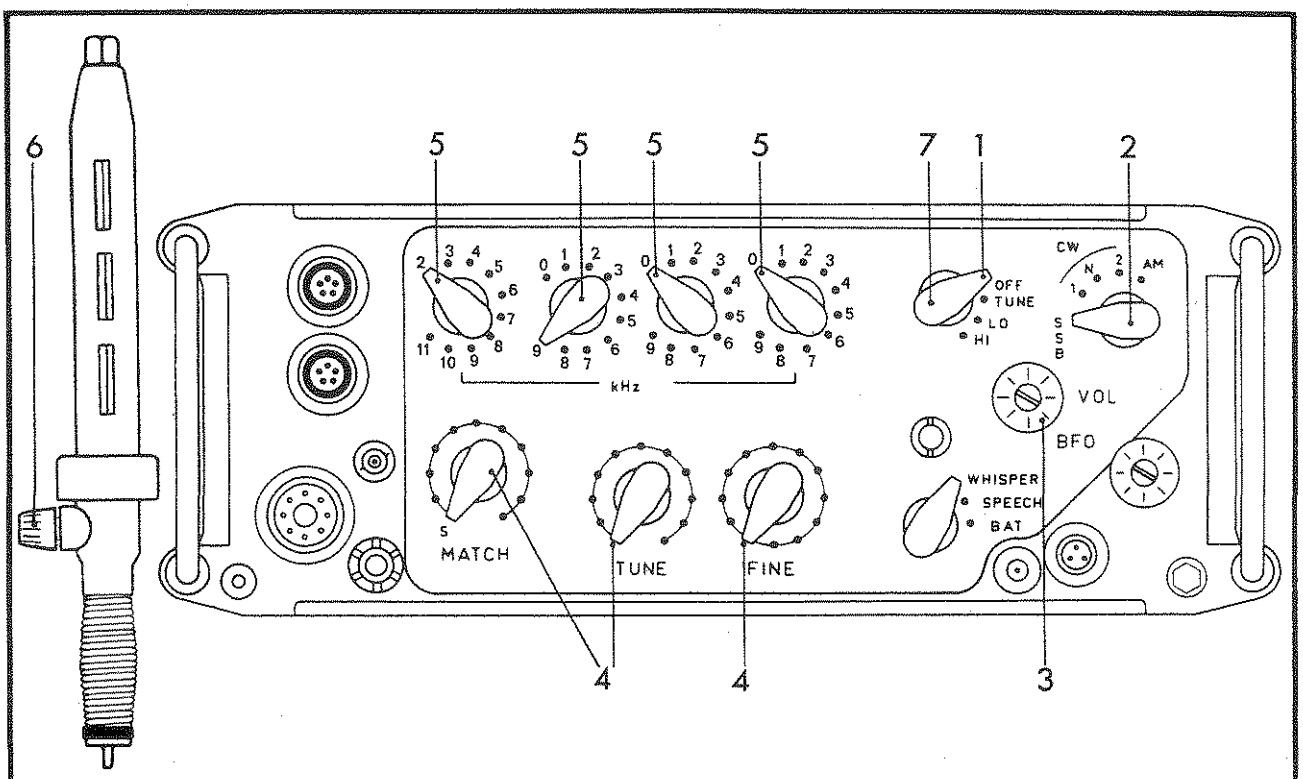

1. Switch to TUNE.

2. Switch to required mode.

3. Advance the VOLUME control to halfway.

4. Switch the MATCH, TUNE and FINE controls fully anticlockwise.

5. Set the frequency (Example shows frequency set to 2.9 MHz = 2900 kHz.

6. Turn the tuning knob (on the coupler) until the loudest noise is heard in the receiver; then operate the PRESSEL switch on the handset, and using the tuning knob, tune to the lowest pitch of the tuning tone. Release the PRESSEL switch.

7. Switch to LO or HI as required.

NOTE

The tuning adjustment detailed in Serial 6 is most important. Tuning adjustment made with the set on the ground will NOT be correct for operation on the back.
Repeat Serial 6 when the set is in position on the operator's back.

FIG 46
TUNING SEQUENCE A - RADIO SETS, PRC-F1 OR F3
USING ANTENNA, AS-F1 (Vertical Whip)

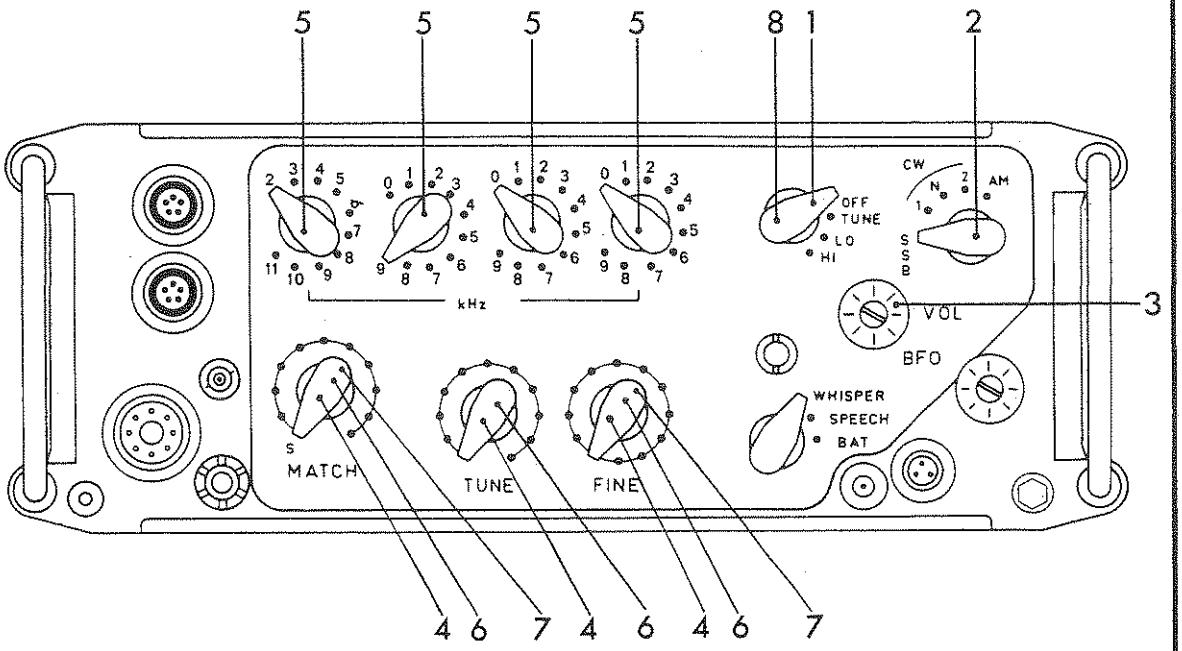

1. Switch to TUNE.

2. Switch to required mode.

3. Advance the VOLUME control to halfway.

4. Switch the MATCH, TUNE and FINE controls fully anticlockwise.

5. Set the frequency (Example shows frequency set to 2.9 MHz = 2900 kHz).

6. Press the PRESSEL switch on the handset and adjust the TUNE control, followed by the FINE control, for the lowest tuning tone. Repeat and use the FINE control for the final adjustment. If the initial adjustment of the TUNE control does not noticeably change the tone, adjust the MATCH control for lowest tone and then readjust the TUNE control.

7. Make final adjustments with the FINE and MATCH controls. Release the pressel switch.

8. Switch to LO or HI as required.

FIG 47
TUNING SEQUENCE B - RADIO SETS PRC-F1 OR F3, USING ANTENNA, AS-F2 (Dipole)

136. The high speed burst keying facility is available only on the Receiver-Transmitter, Radio RT-F2/PRC-F3 and it can be used whether the receiver-transmitter is being used in the manpack role, or, where it forms an integral part of the Radio Set, GRC-F2; either ground station or mobile installation. Operating Sequence C applies to all station configurations. The set should be prepared for operation as described in Section 11 para 85 to 89 and tuned as detailed in:

a. Fig 46 - Tuning Sequence A - Radio Set PRC-F3 using Antenna, AS-F1 (Vertical Whip)

b. Fig 47 - Tuning Sequence B - Radio Set PRC-F3 using Antenna, AS-F2 (Dipole)

c. Fig 49 - Tuning Sequence - Radio Set, GRC-F2.

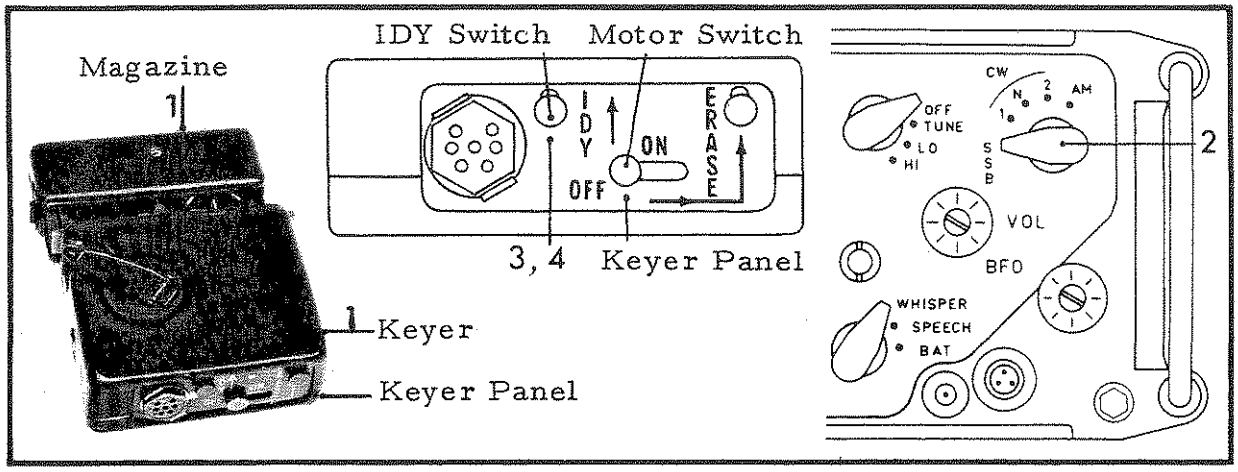

FIG 48
OPERATING SEQUENCE C - USING HIGH SPEED BURST TRANSMISSION FACILITY

1. With the radio set tuned and ready to operate; Attach the tape magazine to the Keyer KE-8B Keyer.

2. Set the mode switch to CW1, CWN or CW2.

3. To transmit IDY, press the spring loaded IDY switch on the control panel of the Keyer upward and HOLD it up for five to ten seconds to enable tuning of the received signal at the receiving station.

4. IMMEDIATELY after releasing the IDY switch slide the MOTOR switch on the control panel of the Keyer to ON. When the transmission has ended as indicated by the cessation of keying sidetone, slide the MOTOR switch to OFF. The Receiver-Transmitter will then revert to receive.

NOTE

The delay between the end of the IDY transmission and the start of the tape transmission should not be long enough to allow the receiver-transmitter to revert to receive. If this does occur the first few characters of the taped message may be lost.

SECTION 16

OPERATING INSTRUCTIONS RADIO SET, GRC-F2

137. This section details the method of tuning and operating the Radio Set, GRC-F2. It is assumed that an internal battery has been installed and checked (refer para 73) and that the setting up procedure given in Section 11 has been carried out.

138. Tuning Sequence. The sequence references are also the serials of Fig 48.

1. Set the frequency.

2. Switch to TUNE.

3. Switch to required mode.

4. If the CW2 mode is being used, adjust the BFO control to obtain a suitable tone. (Even in the absence of a received signal, the quality of the receiver noise will vary as the BFO control is adjusted).

5. Switch to WHISPER or SPEECH as required (Only used in the SSB and AM modes).

6. Switch the MATCH, TUNE and FINE controls fully anticlockwise.

7. Switch to the correct position for the antenna in use and the assigned frequency.

8. Switch the MATCH and TUNE controls fully anticlockwise.

9. Switch to BRIDGE.

10. Press (and hold) the pressel switch, or key to bring the set to the transmit condition.

11. Adjust the TUNE control, followed by the MATCH control for maximum meter reading. Repeat until maximum meter reading is obtained.

12. Switch to CURRENT and repeat Serial 11.

13. Release the pressel or key and switch to OPERATE.

NOTE

The maximum meter reading depends on the antenna installation and the assigned frequency and will vary with different operating conditions. Tuning may appear to be obtained on settings of the FREQUENCY MHz switch (see Serial 7) other than those specified in the table. However, such settings are almost invariably accompanied by unnecessary losses and overloading in the tuning circuits and should be avoided.

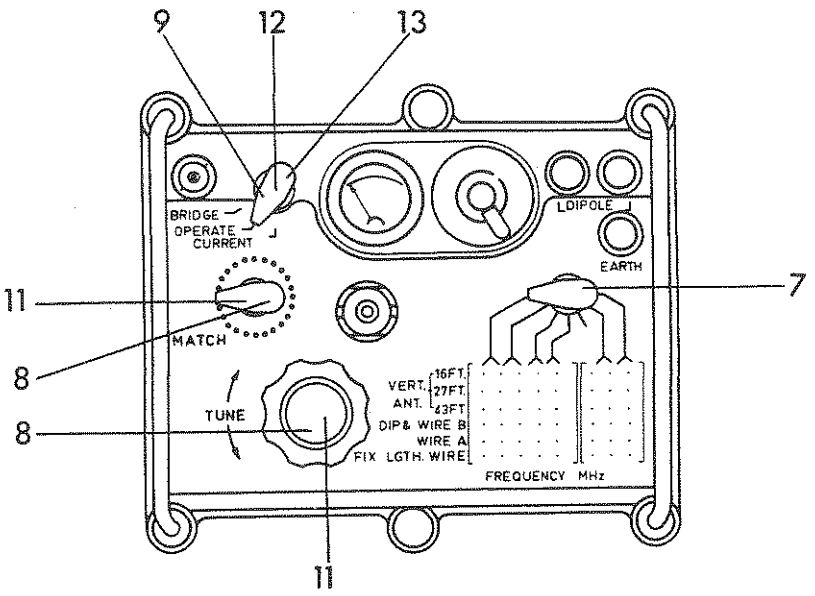

Press and Hold the PRESSEL switch or KEY to bring the set to the transmit condition.

10

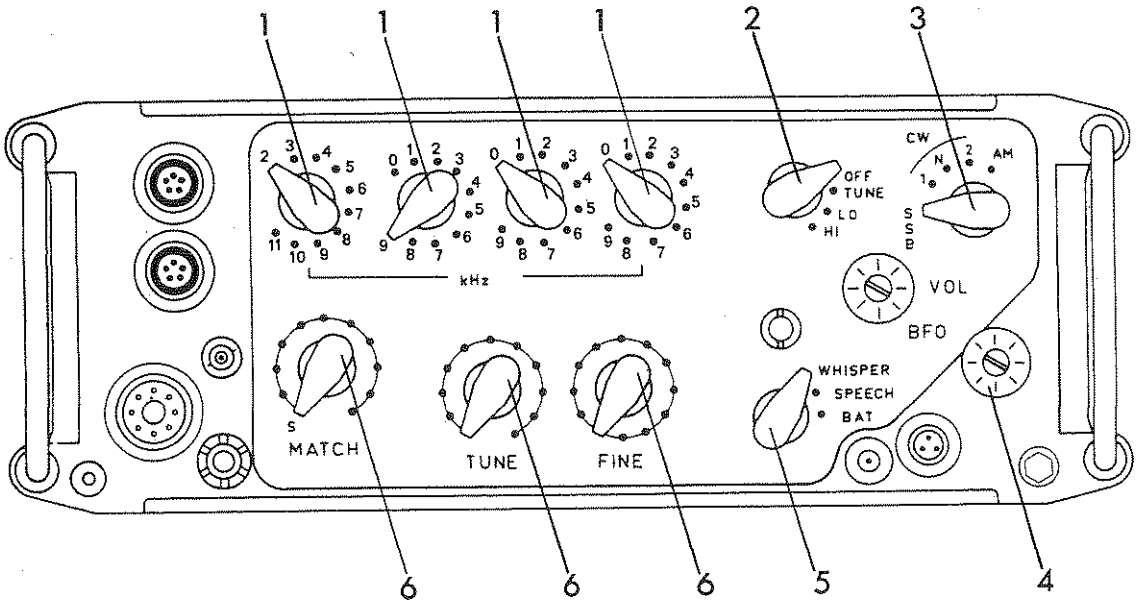

FIG 49
TUNING SEQUENCE, RADIO SET, GRC-F2

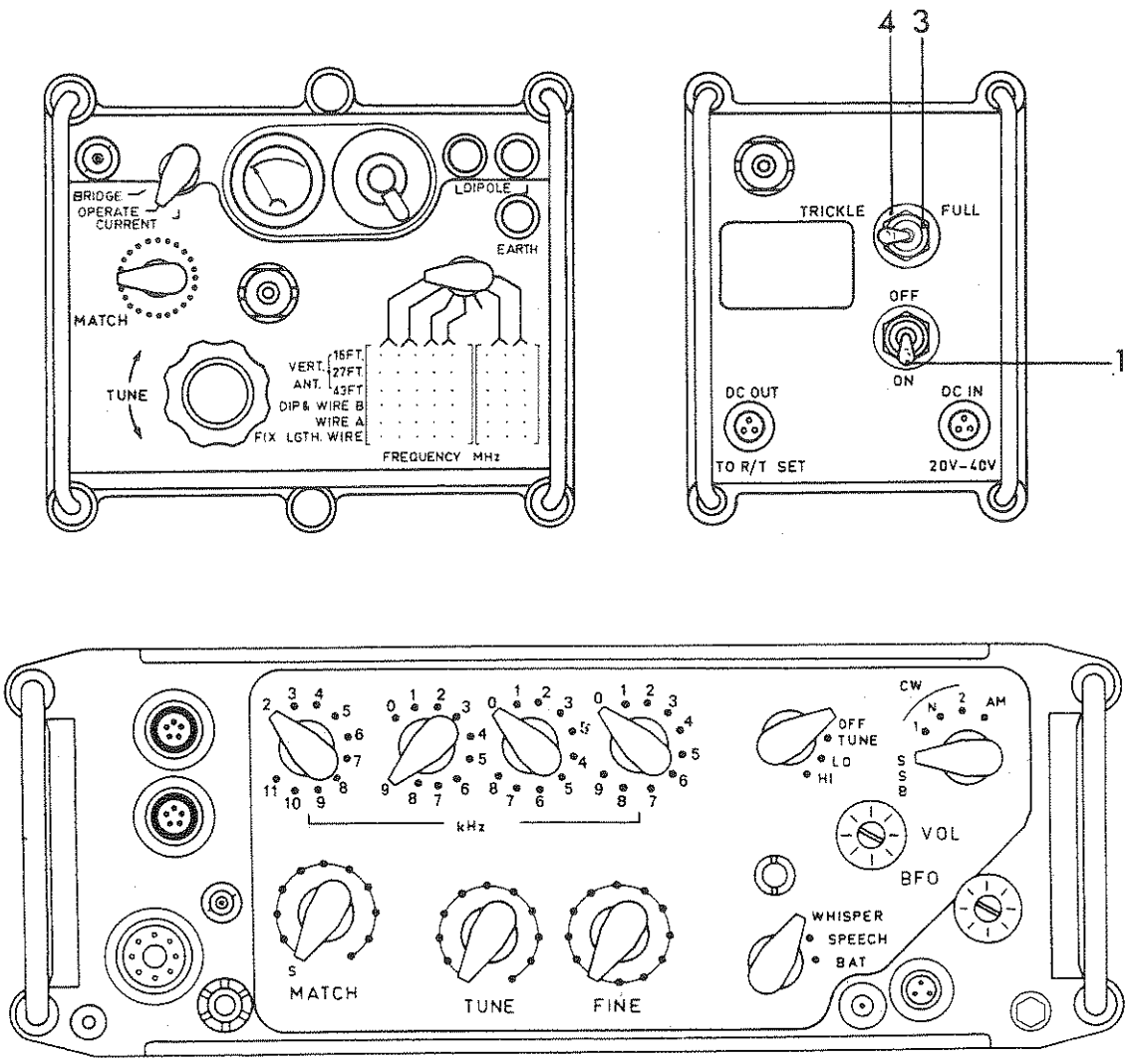

1. Switch to ON

2. Carry out tuning sequence Serial 1 to 13 para 138.

3. Switch to FULL for a period equal to $1\frac{1}{2}$ times the period of use since the last charge, eg, battery used for four hours since last charge, charge at FULL for six hours.

4. Then switch to TRICKLE and leave in this position.

WARNING

Do NOT leave the battery on FULL charge for longer than specified on the battery case.

FIG 50
OPERATING SEQUENCE RADIO SET, GRC-F2
USING POWER SUPPLY, PP-F1

139. The Power Supply, PP-F1 (a component of the Installation Kit, MK-F8 refer para 63) can be used with the ground station Radio Set, GRC-F2. When supplied with input power from a 20-40 Vdc source it will provide the power requirements for the radio set and simultaneously charge the internal battery at a FULL charge rate of 100 mA or a TRICKLE charge rate of 20 mA.

140. The procedure to be followed to prepare the station using the Power Supply PP-F1 is detailed in Section 12, and the operating sequence is given in Fig 50.

CHAPTER THREE
OPERATOR SERVICING

SECTION 17
GENERAL

141. This chapter details the servicing duties of the operator and includes detailed directions on the application of general principle fault finding to the equipments.

CAUTION

The Receiver-Transmitter, Radio, RT-F1/PRC, RT-F2/PRC-F3, Coupler Antenna, CU-F2, and the Power Supply PP-F1 are housed in panclimatically sealed cases and must NOT be opened by the operator under any circumstances.

Scope of Operator Servicing

142. The servicing duties to be performed by the operator require no special tools or test equipment. They include:

a. preventive maintenance,

b. visual inspection,

c. replacement of internal battery, and

d. charging of internal battery.

143. Preventive Maintenance. The servicing tasks to be performed daily are:

a. Clean all components of the equipment of dust or mud accumulation. Take particular care with connectors and joints on the vertical antennae.

b. Clean the inside of all dust caps and ensure that the synthetic rubber discs are inside the caps. Fit the dust caps to their connectors when the connectors are not in use.

c. Keep all components free from grease and oil. Clean with gasoline or cleaning compound if necessary.

d. Inspect the humidity indicators where fitted. If they are PINK in colour report for repair.

e. Check that all controls work smoothly and that all knobs are tight on the spindles.

f. Inspect the wire antennae for frayed insulation or damage, and check that they are correctly wound on their frames when not in use.

g. Check all cable assemblies for damaged wiring, frayed insulation or damaged connectors.

h. Check the condition of the internal battery (refer para 85).

144. Visual Inspection. Check that the equipment is complete in accordance with the relevant table/s. If the equipment fails to operate properly, switch off the power and check for:

a. Incorrectly set controls. Refer to:

(1) Fig 46 Tuning Sequence A - Radio Set, PRC-F1 or F3 using Antenna, AS-F1.

(2) Fig 47 Tuning Sequence B - Radio Set, PRC-F1 or F3 using Antenna, AS-F2.

(3) Fig 48 Operating Sequence C - Using High Speed Burst Transmission Facility.

(4) Para 138 Tuning Sequence - Radio Set, GRC-F2.

(5) Para 140 Operating Sequence - Radio Set, GRC-F2 using Power Supply, PP-F1.

b. Disconnected or improperly connected cables. Refer to:

(1) Section 11 Setting Up Procedure - Radio Sets, PRC-F1 and F3.

(2) Section 12 Setting Up Procedure - Radio Set, GRC-F2.

(3) Section 13 Conversion of Radio Set, GRC-F2 from Ground to Mobile Station.

c. Broken or frayed cables.

d. Broken or grounded antenna wire or down lead.

e. Handset or headset unserviceable or incorrectly connected.

f. Battery discharged. Refer para 73g.

Care of Transit Case

145. Periodically inspect the interior of the transit case for mould growth. Whenever any mould growth is detected, or every twelve months the following measures shall be applied:

a. Brush away all fungal growth,

b. Swab the whole interior of the case with a two per cent solution of tributyl tin oxide (TBTO) in alcohol,

c. Allow the alcohol to evaporate, taking care to minimize fire risks and thoroughly dry the case at about 50°C.

NOTE

To minimize the incidence of mould growth, the interior of the transit case should be kept dry, especially when holding the radio set.

SECTION 18
FAULT FINDING

146. This section includes fault finding charts designed to help the operator locate and correct simple faults. If the suggested corrective action does not eliminate the fault the equipment is to be submitted through normal channels for repair.

147. To avoid unnecessary repetition it is assumed that the equipment configurations covered in the fault finding charts are:

a. complete,

b. set up as detailed in the relevant setting up procedure, and

c. antennae are correctly installed and connected.

Defect Reporting

148. Equipment defects, other than those due to normal wear or accidental damage, are to be reported in accordance with current instructions.

TABLE 8—FAULT FINDING CHART - RADIO SETS, PRC-F1 OR F3 USING ANTENNA, AS-F1

Serial	Operator Action	Fault	Corrective Action
1	POWER switch at TUNE, MATCH control at O	No noise heard in receiver	Adjust VOLUME. Check that dummy plug is on EXT PWR connector. Repeat using another handset.
2	PRESSEL switch down or KEY closed.	No tuning tone heard in receiver	Check controls and connections. Repeat using another handset or key.

TABLE 8 (cont)

Serial	Operator Action	Fault	Corrective Action
3	Four kHz switches set to assigned frequency. PRESSEL switch held down or KEY closed. Adjust tuning knob on coupler.	Tuning tone does not dip to low pitch at correct tuning.	Check cables and connectors. Recheck tuning of coupler. Repeat using another coupler.
4	POWER switch to LO MODE switch to SSB or AM. PRESSEL down and speak into microphone.	No sidetone (speech) heard in receiver.	Check microphone, and handset cable and connector. Repeat using another handset.
5	MODE switch to CW1. Operate KEY.	No sidetone (2 kHz) heard in receiver.	Check key, cable and connector. Repeat using another key, or using pressel switch as key.
6	Test with another station on SSB or CW.	No speech or morse heard.	Adjust VOLUME. Check controls and connections.
7	MODE switch to CW2 and adjust BFO control.	Morse signal does not vary in pitch with BFO setting.	Check controls.

TABLE 9—FAULT FINDING CHART - RADIO SETS PRC-F1 - USING ANTENNA, AS-F2

Serial	Operator Action	Fault	Corrective Action
1 & 2	As for Serial 1 and 2 of Table 8.		
3	Four kHz switches set to assigned frequency.	Tuning tone does not dip to low pitch at correct tuning.	Check controls and connections. Recheck tuning of TUNE, FINE and MATCH controls.

TABLE 9 (cont)

Serial	Operator Action	Fault	Corrective Action
	Hold down PRESSEL switch or close KEY and adjust TUNE, FINE and MATCH controls for lowest pitch tuning tone.		Check antenna for short circuit to earth. Check that receiver-transmitter is isolated from earth.
4-7	As for Serial 4 to 7 inclusive of Table 8.		

TABLE 10—FAULT FINDING CHART - RADIO SET, GRC-F2

Serial	Operator Action	Fault	Corrective Action
1	Receiver-transmitter POWER switch at TUNE MATCH control at O	No noise heard in receiver.	Adjust VOLUME. Check that dummy plug is on EXT PWR connector. Repeat using another handset.
2	PRESSEL switch down or KEY closed.	No tuning tone heard in receiver.	Check controls and connections. Repeat using another handset or key.
3	Coupler Antenna, CU-F2 FREQUENCY MHz switch to correct position for assigned frequency and antenna in use. METER switch to BRIDGE. PRESSEL switch held down or KEY closed. Adjust MATCH and TUNE controls for maximum current.	Meter reading does not peak at correct tuning.	Check that receiver-transmitter MATCH control is at O. Check that FREQUENCY MHz switch (on Coupler) is correctly set. Check controls and connections. Recheck tuning of MATCH and TUNE controls (on Coupler). Repeat using another cable between receiver-transmitter and coupler.

TABLE 10 (cont)

Serial	Operator Action	Fault	Corrective Action
4	METER switch to CURRENT. Adjust MATCH and FINE controls for maximum meter reading.	Meter reading does not peak.	Check antenna and down leads for short circuit to earth.
5	METER switch to OPERATE.		
6	Receiver-Transmitter As for Serial 4 to 7 inclusive of Table 8.		

TABLE 11—FAULT FINDING CHART - RADIO SET, GRC-F2 USING POWER SUPPLY, PP-F1

Serial	Operator Action	Fault	Corrective Action
1	Power Supply PP-F1 CHARGE rate switch to FULL or TRICKLE as required. ON-OFF switch to ON. Receiver-transmitter POWER switch to TUNE. MATCH control to O.	No noise heard in receiver.	Adjust VOLUME. Check power source and power supply connections. Repeat using another handset.
2	As for Serial 2 to 6 inclusive of Table 10.		

CHAPTER FOUR
ANTENNAE

SECTION 19
GENERAL

NOTE

Throughout this chapter lengths have not been given exclusively in SI units; because the tables affixed to the various antennae give lengths in feet, and the radiating element of the Antenna, AS-F2 is marked with beads at one foot and at ten foot intervals.

Choice of Antenna

149. Factors which influence the choice of antenna are:

a. Operating range (distance) required,

b. Operating frequency,

c. Site of the radio station,

d. Propagation method, and

e. Propagation conditions.

150. The two propagation (or communication) methods are ground wave (direct) and sky wave (indirect). These are defined briefly as:

a. Ground Wave Propagation. This is the transmission of radio energy (waves) along the earth's surface. It is more reliable than sky wave propagation but can only be used over short distances, and is unsatisfactory in dense scrub or jungle.

b. Sky Wave Propagation. In this method, radio energy transmitted skywards is reflected earthwards by the ionosphere. The height of the ionosphere is changing continually and is one of the causes of signals fading in strength, a common fault in sky wave communication. This method is used for long distance communication, and is the only practical method when working in dense scrub or jungle.

151. For selection of the optimum antenna configuration for the operating range required, it will be necessary to consult the current ground or sky wave propagation charts for the area of operations.

Type and Use of Antennae Supplied

152. The antennae supplied with the complete installation, eg, Radio Sets, PRC-F1 or F3, GRC-F2, and Installation Kit, Electronic Equipment, MK-F8 are:

a. Antenna, AS-F1 Qty 2

b. Antenna, AS-F2 Qty 2

c. Antenna, AS-F3 Qty 1

d. Antenna, AS-F4 Qty 1

e. Antenna, Vertical Whip 16ft Qty 1

153. Antenna, AS-F1 and Antenna, Vertical Whip 16ft. These vertical whip antennae are best used for short range ground wave propagation. Use of an earth connection or counterpoise antenna provides some improvement in range.

154. Antenna, AS-F2. Two of these antennae (and an Antenna Feeder Assembly, 70 Ohms) comprise one dipole antenna. The dipole is the most effective antenna for sky wave propagation but has very little ground wave propagation. The range of operation depends upon the frequency, propagation conditions, and the height of the dipole above the ground. The optimum height for:

a. Long Range Working. Is one half wave length above the ground. This is equivalent to the full length of the dipole, or twice the length of each wire as shown on the plate affixed to the flap on the antenna case.

b. Short and Medium Range Working. Is one quarter wave length above the ground. This is equivalent to half the length of the dipole, or the length of each wire as shown on the plate affixed to the flap on the antenna case.

155. Antenna, AS-F3 and F4. These antennae are an adjustable, and a fixed length, end-fed, antenna respectively. End-fed antennae may be used to favour ground or sky wave propagation depending on the method of erection, but are most suitable for long range ground wave propagation. For maximum possible range the antenna should be erected as near vertical as possible. For short range sky wave propagation, the antenna should be erected in a horizontal (inverted L), or if this is not practicable, in an inclined manner. The end-fed antenna have significant ground wave propagation when erected for sky wave propagation.

CAUTION

Do NOT operate the Radio Sets, PRC-F1, PRC-F3, or GRC-F2 in close proximity to other sets (transmitters) operating in the same frequency range. If this is unavoidable the distance separating the antennae MUST be made as great as possible, but should never be less than specified in Table 12. If wire antennae are used greater spacing should be employed.

TABLE 12—MINIMUM ALLOWABLE DISTANCES BETWEEN ANTENNAE OF NEARBY RADIO SETS (TRANSMITTERS)

Nearby Transmitter Type	Possible Power Output Watts	Minimum Antennae Spacing for Antenna, AS-F1 and Antenna Vertical Whip 16ft (1)
PRC-F1	10	4.5 m
PRC-47	100	4.5 m
GRC-106	400	11 m

NOTE

This antenna is provided for use in mobile installations.

SECTION 20

ERECTION OF ANTENNAE

156. Antenna AS-F1, and Antenna Elements, MS-116A, 117A and 118A. Instructions for the assembly and erection of these vertical antennae are given in para 78 and 115 respectively.

Antenna, AS-F2

157. For best results the dipole antenna should be erected with the radiating wires horizontal and at the optimum height (refer para 153). If it is not possible to erect the antenna to the optimum height it should be erected as high as possible. Where time does not permit full installation of the antenna, communications may be established at reduced signal strength by laying the antenna out roughly horizontally over scrub and bushes a metre or so from the ground.

158. In non-equatorial regions the antenna can usually be erected by using the most convenient supports available without regard to the direction of its axis. However, for best performance the antenna should not be oriented so that other stations on the net are located within 90 mils of the direction of the antenna wire axis. When operating close to the equator, some advantage can be gained by aligning the axis of each antenna on magnetic NORTH-SOUTH lines, regardless of the direction from one station to another.

159. To erect the dipole:

a. Undo the flaps of the antenna cases and from the table affixed to the flap (and reproduced as Fig 51) ascertain the correct length of each wire to be used for the assigned frequency.

b. Unwind the correct length from both cases. The length must include the lengths of the case (6 in). The wire is marked at one foot intervals with a red bead and at ten foot intervals with a yellow bead.

c. Close the flaps of the cases and secure the wires by passing a loop of wire through the insulator, over the case and back around the insulator (see Fig 52).

d. Pass the tree ends of the dipole wires through the holes in the dipole feeder frame, and secure to the terminals.

e. Set up masts, or locate suitable trees or supports.

f. If using masts attach the halyards to the insulators at the outer end of each case and hoist the antenna into position.

g. If using trees or supports, unwind sufficient cord from each Cord Aerial Weighted and attach an end to the insulator at the outer end of each case.

h. Throw each bobbin over the selected tree or support and hoist the antenna into position. If using one support ensure that the lower dipole case is isolated from ground.

PRC-FI DIPOLE AERIAL

FREQ Mc/s	WIRE LGTH	FREQ Mc/s	WIRE LGTH	FREQ Mc/s	WIRE LGTH	FREQ Mc/s	WIRE LGTH	FREQ Mc/s	WIRE LGTH
2.0	113	2.9	76	4.4	49	6.2	33½	8.5	24
2.1	107	3.0	73	4.6	46½	6.4	32½	8.8	23
2.2	102	3.1	70½	4.8	44½	6.6	31½	9.2	22
2.3	97	3.2	68	5.0	42½	6.8	30½	9.6	21
2.4	93	3.4	64	5.2	41	7.0	29½	10.0	20
2.5	89	3.6	60	5.4	39½	7.3	28	10.4	19
2.6	85	3.8	57	5.6	38	7.6	27	11.0	18
2.7	82	4.0	54	5.8	36½	7.9	26	11.6	17
2.8	79	4.2	51½	6.0	35	8.2	25	12.2	16

NOTE: LENGTH OF WIRE STATED IS THE LENGTH IN FEET TO BE WOUND OFF EACH REEL

FIG 51
INSIDE FLAP OF ANTENNA, AS-F2

i. If using the Radio Set, PRC-F1 or F3, connect one down (feeder) lead to the WIRE terminal, and one to the EARTH terminal on the front panel of the receiver-transmitter and ensure that it is isolated from ground.

j. If using the Radio Set, GRC-F2 connect the down (feeder) leads to the two RED DIPOLE terminals on the Coupler, Antenna, CU-F2.

k. The methods of tuning the antenna when used with the Radio Sets, PRC-F1 (or F3) and the GRC-F2 are given in para 132 and 135 respectively.

160. If satisfactory communications are not established at the first attempt it will be necessary to experiment with both the height and orientation of the antennae. The antenna MUST be retuned if any changes are made.

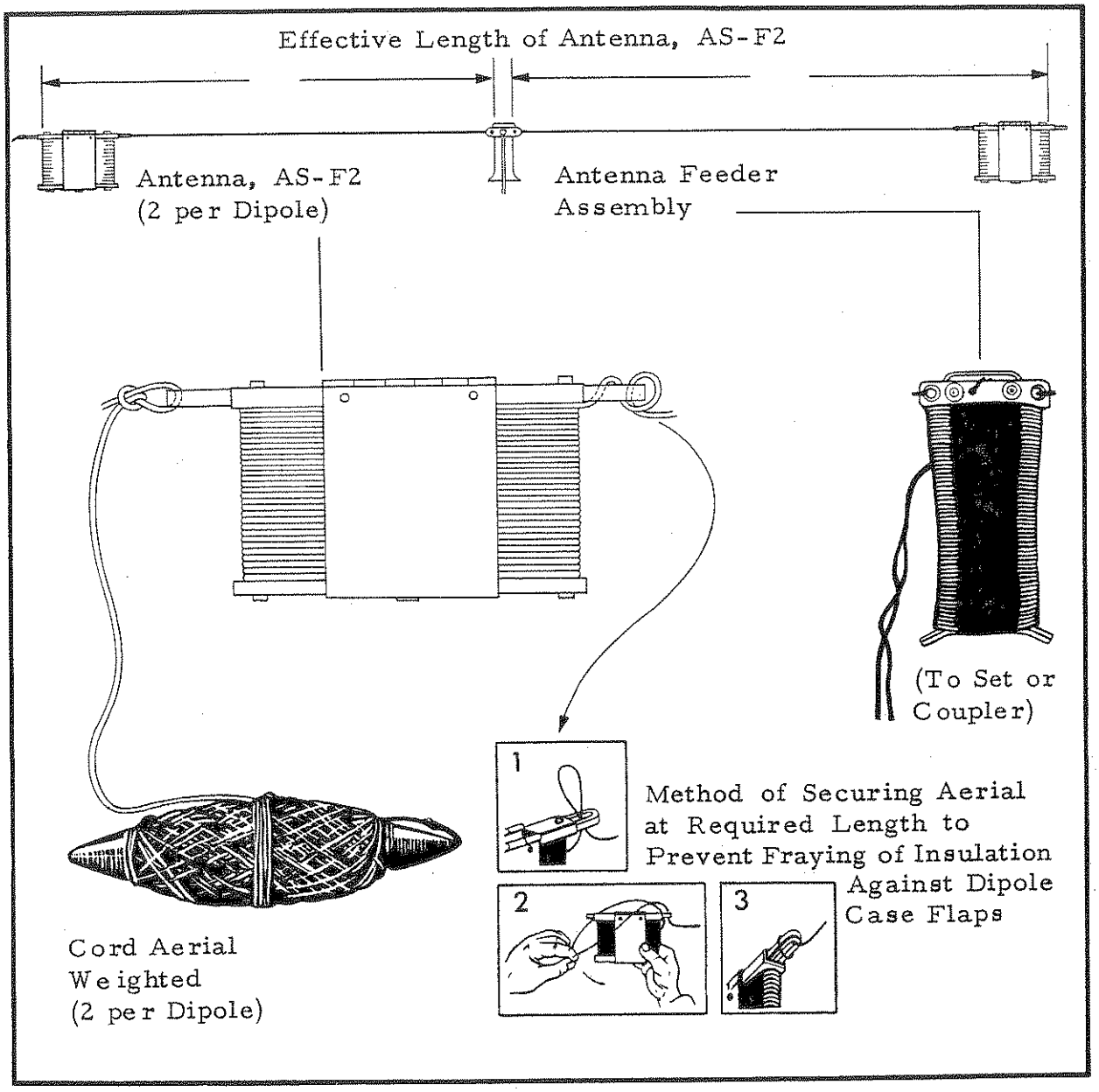

FIG 52
PREPARATION OF DIPOLE

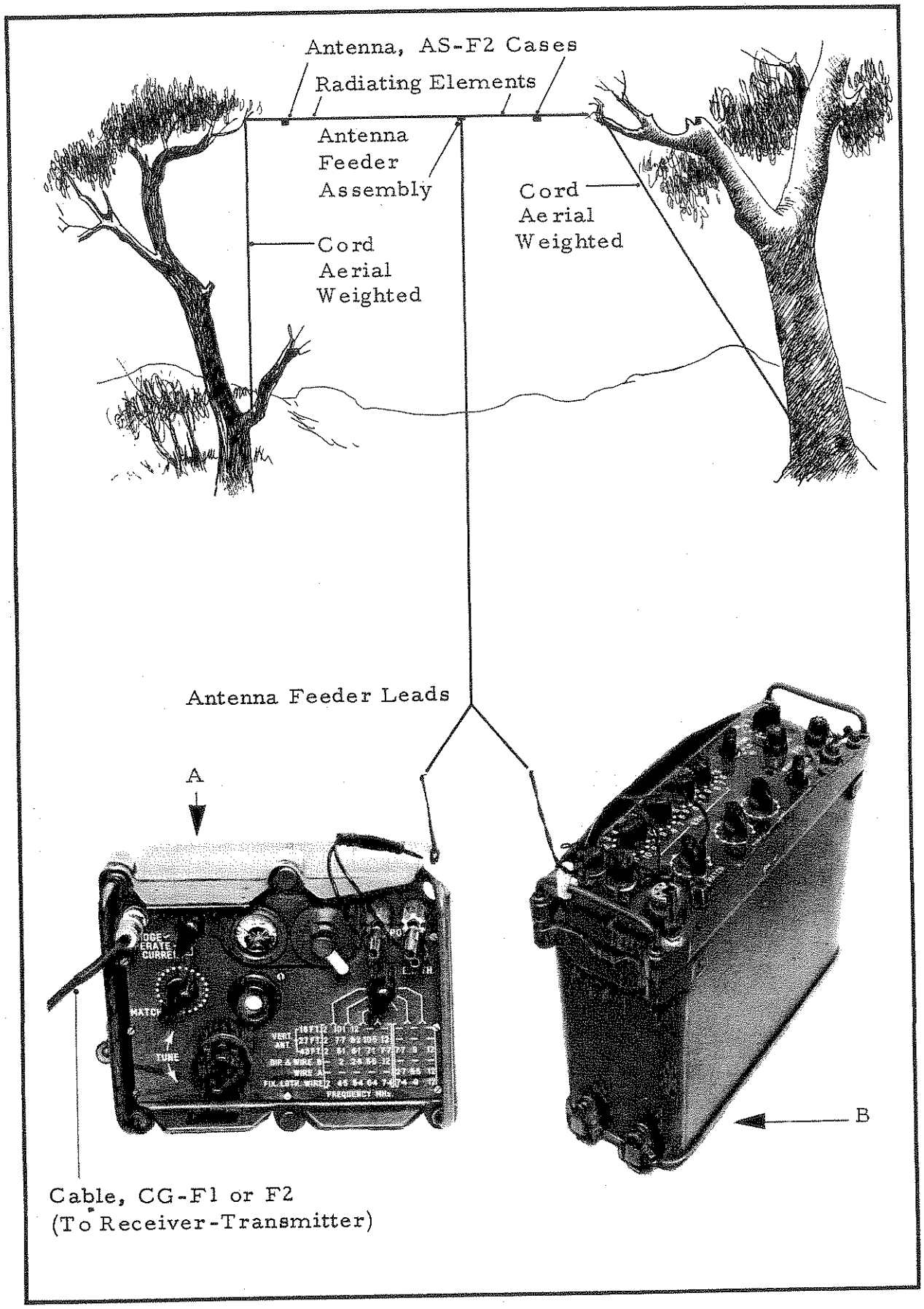

FIG 53
ERECTED DIPOLE - CONNECTED TO
A COUPLER ANTENNA, CU-F2 (GROUND STATION ROLE)
B RECEIVER - TRANSMITTER (TEMPORARY GROUND STATION ROLE)

Antenna, AS-F3

161. This adjustable end fed wire antenna is described in para 154 and illustrated in Fig 54. Two plates are affixed to the insulated frame of the antenna. One is a sketch depicting the method of erection, and the other is a table (reproduced at Fig 55) which specifies for the assigned frequency:

a. The number of links to be made, and

b. Which link is joined to the ORANGE lead-in wire (Antenna lead to Receiver Transmitter, or, Coupler, CU-F2).

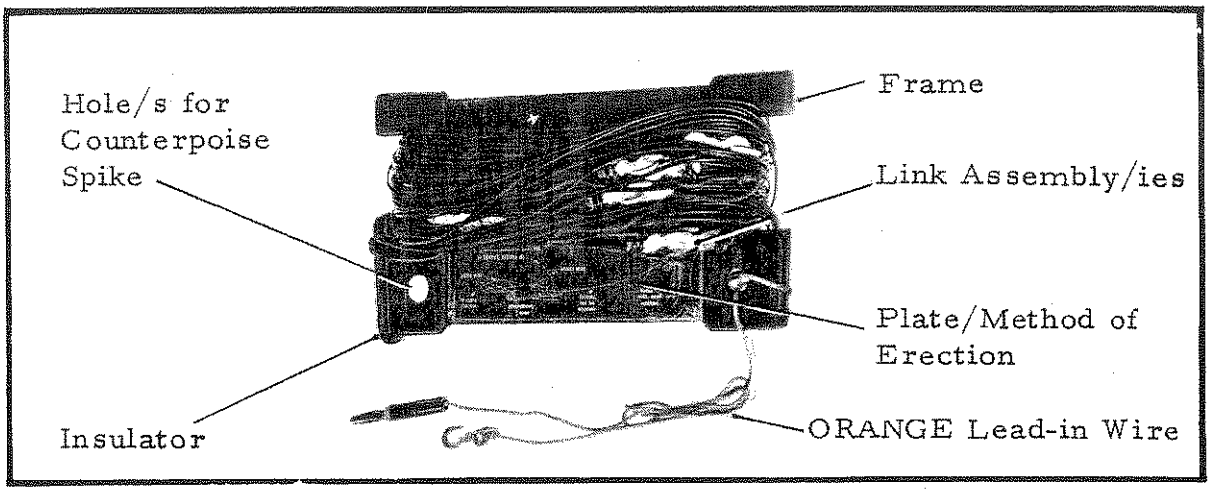

FIG 54
ANTENNA, AS-F3

162. The antenna may be used with the receiver-transmitter, in which case Range B of the table is used, or with the Coupler Antenna, CU-F2, in which case either range may be used, but preferably Range A.

163. To erect the antenna:

a. From the table (Fig 55) ascertain for the assigned frequency the number of links to be made and unwind them from the insulated antenna frame.

b. Disconnect the last link assembly and connect the eye to the hook on the ORANGE lead-in wire.

FREQUENCY RANGE		No. LINKS MADE	LINK TO SET	FREQUENCY RANGE		No. LINKS MADE	LINK TO SET	ANTENNA END FED 026-4336
A	B			A	B			
—	10.5-12.0 MHz	-	1st	5.5- 6.7 MHz	3.7-4.2 MHz	6	7th	ON R/T UNIT USE ONLY RANGE B. ON COUPLER ANTENNA (B) RANGE A IS PREFERRED
—	9.1-10.5 MHz	1	2nd	4.5- 5.5 MHz	3.2-3.7 MHz	7	8th	
11.4-12.0 MHz	7.4-9.1 MHz	2	3rd	3.7- 4.5 MHz	2.7-3.2 MHz	8	9th	
9.7-11.4 MHz	6.6-7.4 MHz	3	4th	3.2- 3.7 MHz	2.3-2.7 MHz	9	10th	
8.0- 9.7 MHz	5.3-6.6 MHz	4	5th	2.7- 3.2 MHz	2.0-2.3 MHz	10	11th	
6.7- 8.0 MHz	4.2-5.3 MHz	5	6th	—	—	-	-	

FIG 55
TABLE - LENGTH OF ANTENNA REQUIRED FOR ASSIGNED FREQUENCY

c. Unwind sufficient cord from the bobbin of the Cord, Aerial Weighted and attach the end of the cord to the insulator at the end of the first link.

d. Throw the bobbin over a suitable tree or support.

e. ENSURE that each hook and eye in the used portion of the antenna is joined and hoist the antenna into position. Do NOT overstrain the cord; its breaking strain is approximately 27 kg.

f. The spike of the counterpoise can be inserted through the hole in the insulated frame of the antenna to hold the frame in position.

g. Lay the four BLACK wires of the counterpoise in the form of a cross.

h. If using the Radio Set, PRC-F1 or F3, connect the ORANGE lead-in wire (1) to the WIRE terminal on the front panel of the receiver-transmitter, and the GREEN lead from the counterpoise to the EARTH terminal.

i. If using the Radio Set, GRC-F2, connect the ORANGE lead-in wire (1) to the spring loaded terminal on the Coupler Antenna, CU-F2, and the GREEN counterpoise wire to the EARTH terminal.

j. The methods of tuning the antenna when used with the Radio Sets, PRC-F1 or F3, and GRC-F2 are given in Section 15 and 16 respectively .

NOTE

In both cases the ORANGE lead-in wire MUST be kept clear of the ground.

164. The composition of the antenna is shown at Fig 57. This will facilitate reassembly of the antenna if the sections should become separated.

Antenna, AS-F4

165. This non-adjustable end fed antenna, approximates, usually with some loss of efficiency to the characteristics of the adjustable Antenna, AS-F3. It may be used in situations where this loss of efficiency can be tolerated because of the advantage gained by the operator not being obliged to reset the length of the antenna as the frequency is changed.

166. The antenna differs from the adjustable Antenna AS-F3 only in that:

a. The radiating element is one continuous length of wire (no links fitted).

b. It is only used with the Radio Set, GRC-F2.

167. To erect the antenna; proceed as detailed for Antenna AS-F3 (para 163) except that:

a. No links are made.

b. The antenna is not used with the Radio Sets, PRC-F1 or F3.

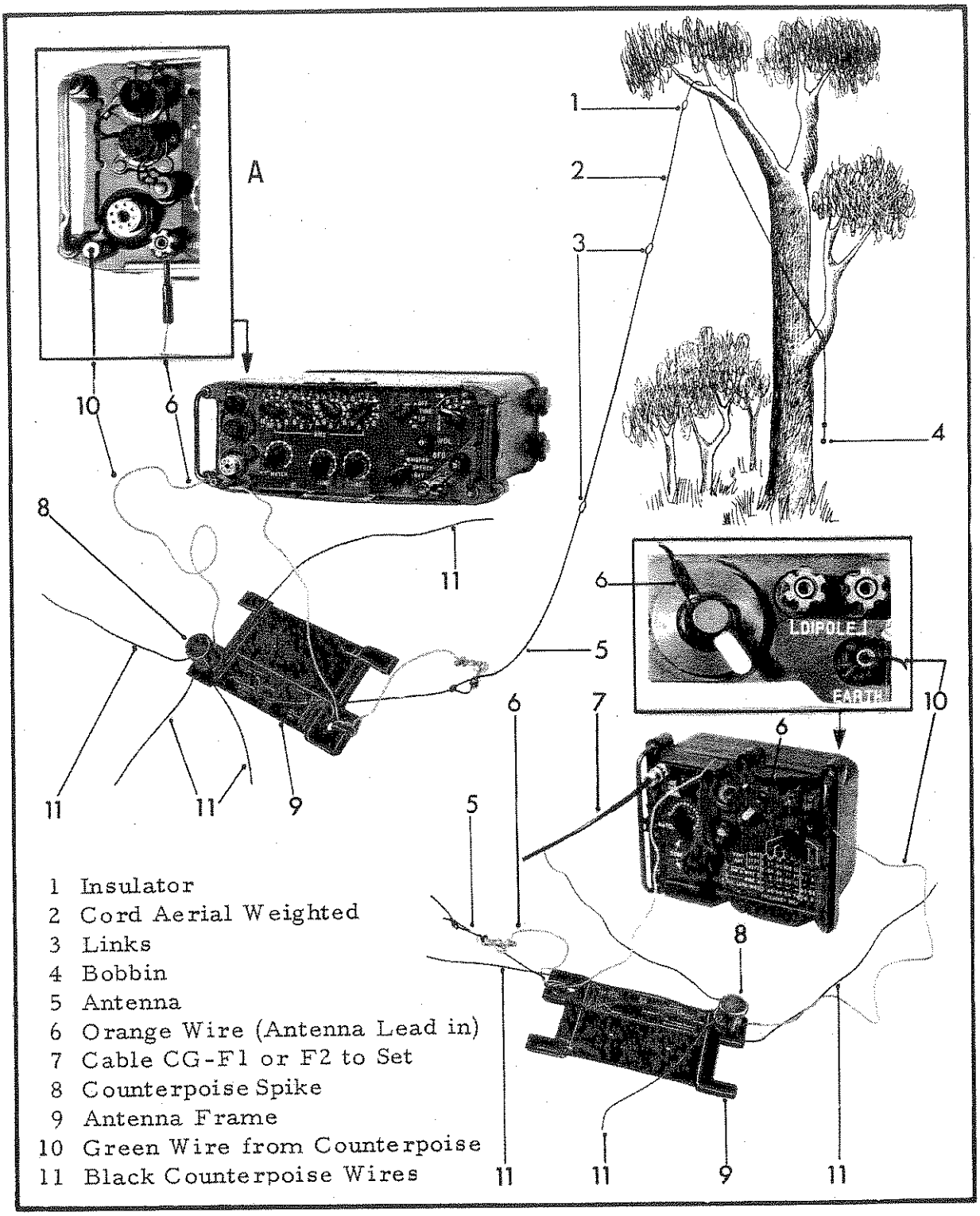

FIG 56

ERECTED END FED ANTENNA - CONNECTED TO:
A RECEIVER-TRANSMITTER
B COUPLER ANTENNA, CU-F2

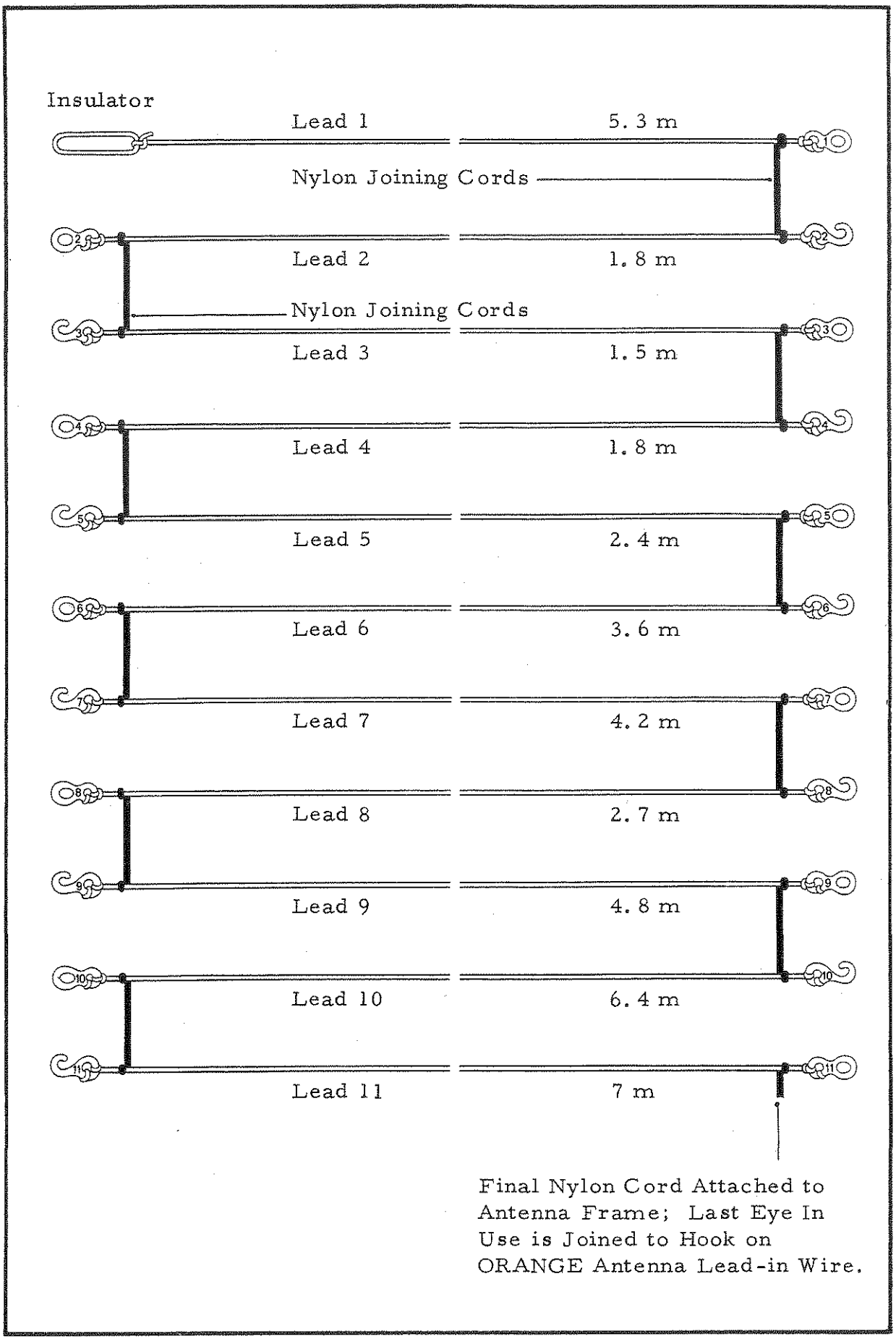

FIG 57
COMPOSITION OF ANTENNA, AS-F3

INDEX

Para No

E

F

5977
6017