REPAIR DOCUMENTATION

on

RECEIVER RADIO R5223

RECEIVER R5223

TABLE OF CONTENTS

1.0. GENERAL

2.0. FRONT PANEL CONTROL FUNCTIONS
Fig. 1. Front Panel Controls

3.0. BRIEF MECHANICAL DESCRIPTION
Fig. 2. Receiver Top View
Fig. 3. Receiver Bottom View

4.0. BRIEF ELECTRICAL DESCRIPTION
a. Examples showing calculations of image frequencies
b. Receiver block diagram showing signal path and frequencies
c. Table showing bands , their frequencies, oscillator, first I.F., V.F.O., O/P, second I.F. and the range of first and second I.F. Frequencies.
d. Chart showing crystals and their bands
e. Fig. 4. Receiver Block Diagram

5.0. TECHNICAL DESCRIPTION

5.1. Crystal Calibrator
5.2. R.F. Assembly
5.3. V.I.F. Assembly
5.4. V.F.O. Assembly
5.5. I.F. Amplifiers
5.6. Detector
5.7. Audio Amplifier
5.8. Power Supply

6.0. OVERALL SPECIFICATION TESTS

6.1. Test Equipment
6.2. Meter Readings
6.3. Sensitivity Test
6.4. Selectivity Test
6.5. Spurious Responses
6.6. A.G.C.
6.7. Filter Control Assembly
6.8. Crystal Calibration Accuracy
6.9. Resetting Accuracy
6.10. B.F.O. Frequency Range
6.11. B.F.O. Effectiveness
6.12. S. Meter
6.13. Calibration Accuracy
6.14. Operation from D.C. Supply
6.15. Audio Performance
6.16. Overall Harmonic Distortion
6.17. Frequency Stability Characteristics
Table 2 (Summary of 6-1 - 6-17).

7.0. FAULT FINDING DATA
Table 3 Voltage Analysis at Feed through Posts
Table 4 Electron Tube Base Analysis
7.4. Stage Gain (Refer Figs. X & Y)

8.0. ALIGNMENT AND ADJUSTMENTS
8.1 I.F. Alignment
8.2. B.F.O. Adjustment
8.3. V.F.O. Adjustment
8.4. V.I.F. Alignment
8.5. Crystal Oscillator Alignment
8.6. R.F. and Antenna Alignment
Table 5 Procedure for checking tracking or alignment.
Table 6 Nominal sensitivity and Stn/N measurements
8.7. Dial Accuracy

9.0. MECHANICAL REPAIR
9.1. Removal of Assemblies
9.2. Removal of the Front Panel and Controls
9.3. Soldering Technique
9.4. Sub-Assembly Panel Removal

10.0. SEAL TEST AND DRYING PROCEDURE
APPENDIX 1 R.F. Box Test Report

LIST OF ILLUSTRATIONS

Test Point Layout Top View TP290 40
Test Point Layout Bottom View TP290 41
Front Panel Wiring TP290 44
Gear Plates Assy. TP290 42
Dial Drum Assy. TP290 43

2.0 FRONT PANEL CONTROL FUNCTIONS

1 Filter Control, cuts the higher frequencies.
Tunes the centre freqeuncy on CW. (Item 23)

2 Speaker,(no marking)

3 Zero Adj., to adjust the cursor to take up calibration inaccuracies.

4 Kilocycles, direct reading in khz.

5 Dial Lamp, removable cover to allow access to the main dial lamp.
This point is also used for [illegible] seal testing.

6 Megacycles, changed by BAND SWITCH (16) to show frequency cover.

7 Metering, first position of switch provides an "S" meter reading.
Position 2 audio output,
Position 3 an HT reading.
Positions 4 to 11 provides metering of valve currents.
Last position is for wander leads for general metering purposes.

8 Co-ax, aerial 70 ohms, Co-axial socket unbalanced for Co-axial cable termination.

9 Aerial,terminals for 600 ohm feeder either balanced or unbalanced.
E For the unbalanced application a link is placed between the RH terminal and Earth.

10 Meter (no marking), operates with METERING switch (7).
Positions 4 to 10 on metering switch should indicate 1/2 scale deflection on meter.

11 Lock, locks tuning (19).

12 Cal. Off-On, switches 100khz calibration oscillator.

13 Lighting Off-On, switches dial lamps ON or OFF.

14 Aerial, tuning of aerial circuit for optimum performance.

15 I.F., Co-axial 70 ohm output from IF for 500khz ahcillary equipment.

16 Band Switch, a 29 position switch to select the required frequency band.

17 R.F. Gain, manual control of RF and IF amplification.

18 D.C., 4 amp fuse in holder.

19 Tune(no marking), frequency selection.

20 A.C., 500mA fuse in holder.

PANEL MARKING	2.0	FRONT PANEL CONTROL FUNCTIONS
Ttr.	21	A four position switch for diversity ON-OFF under either condition of limiter in or out.
B.F.O.	22	Varies the C.W. note.
Funct.	23	A 6 position switch nl., STD. BY (Filaments only) RT. MCW. CW. (B.F.O. is ON) MCW. } Audio filter in. CW. } In the positions without filter, the filter control acts as a tone control, i.e. top cut filter. With filter in a 250Hz. pass band is tunable over the audio range.
Audio Gain	24	Manual control of output level.
Power	25	A 20 point connecter for AC or DC supply. Heater series parallel arrangement effected in the plug for 24V operation. Polarity of battery connection is immaterial.
Power ON-OFF Spkr. OFF	26	Applies power to the power transformer primary; additional position switches speaker OFF.
D 10	27	600 ohm balanced line output. May also be used for remote speaker.
Supply volts Selecter (no marking)	28	Sets to the supply voltage.
'Phone Div.' Mute	29	Phone output 75 ohm. Two sockets in parallel also carry the muting and diversity controls when two receivers are used in space diversity.

3.0 BRIEF MECHANICAL DESCRIPTION (See Figs. 2 and 3)

3.1 The receiver is designed on the sealed sub-unit principle, with the valves placed outside the seal. This obviates breaking the seal to replace valves; and enables the isolation of faulty sub-units in case of break-down.

The individual sub-units are detailed below: -

(a) Radio frequency (RF) unit contains-

Aerial tuned circuits-RF tuned curcuits-
1st mixer - Crystal oscillator

(b) Variable intermedium frequency (VIF) unit containing-
Tuned circuits covering two bands,
1.5MHz- 2.5MHz, and 2.5MHz- 3.5MHz;
2nd Mixer.

(c) Variable frequency oscillator (VFO) unit tunable from 2- 3MHz.

(d) Intermediate frequency units (1st IF and 2nd IF) containing a pair of tuned circuits, and a valve amplifier.

(e) Detector, BFO, AVC (DET.BFO.LTR) source and amplifier, and noise suppressor.

(f) Audio amplifier and audio filter.

(g) [redacted] Calibration crystal oscillator (100KHz).

(h) The main framework of the equipment which also carries the power supply and metering facilities.

(j) Gear box and dial mechanism.
This unit also carries potentiometers for gain controls and filter tuning.

3.1.1 Each sub-unit [redacted] is screwed to the main frame, and has solder connections to wiring loom. Detachable couplings are provided for spindles entering sub-units.

3.1.2 The receiver case is sealed by a neoprene gasket, and the front panel is attached [redacted] to the case by 24 screws.

3.1.3 Scale and meter illumination are provided by seperate pilot lamps, one mounted between the two scales, and the other below the meter inside the case.

4.0 BRIEF ELECTRICAL DESCRIPTION

The Receiver R5223 has provision for operation from power sources of 100-130V A.C., 200-260V A.C., and 24V D.C.

Signals within the range 1.5-30.5MHz enter the R.F. Box, are amplified, and are mixed with a locally generated oscillator signal to produce a first I.F. signal within the range 1.5-30.5MHz (i.e. Variable I.F.).

This V.I.F. signal, is mixed in the V.I.F. Box with a 3.0-2.0MHz signal, generated in the V.F.O. box.
The resultant signal, the second I.F. signal of 500KHz is passed through the two second I.F. amplifying stages to the Detector Box.

The Detector Box has four functions:

(1) Detection
(2) Noise Limiting
(3) A.G.C.
(4) B.F.O.

The Detector section, rectifies the incoming signal, demodulates it, and passes it via the noise limiter to the Audio Box. The noise limiter may be switched in or out of circuit as required.

The Audio signal is amplified in the two audio stages, the first of which may be switched to form a variable filter to restrict the audio bandwidth.

Output is available in three modes, these being headphones speaker or 600ohm line.

The incoming 500KHz signal into the Detector Box is also converted to A.G.C. voltage and fed at two different levels to (1) the R.F. Box and (2) the V.I.F. and I.F. stages for control purposes.

The fourth function of the Detector Box- the B.F.O.- is available for the reception of C.W. or F.S.K. signals.

A Crystal Calibrator Box generates a 100KHz signal rich in harmonics. These are used for calibration checking up to the frequency limits of the receiver.

Metering is effected through a switch which applies the meter in shunt with series resistors where current readings are required, across a rectifier for audio measerment, in series with resistors for voltages measerments, and a final position where the meter is isolated from the internal circuitry and connected to internal test prods for trouble shooting.
The receiver is capable of space diversity reception when interconnected to an identical receiver through adaptor cords supplied with each receiver.

V.I.F. OR FIRST I.F. IMAGE

The image we are concerned with is the unwanted signal arriving at V2 and mixing with the local oscillator frequency to produce the wanted V.I.F. frequency which will be passed through the remainder of the circuitry in the normal manner.

Use band 6 an even band, range 6.5-7.5MHz and using 10MHz Xtal and band 7 an odd band, range 7.5-8.5MHz and using 10MHz Xtal. The V.I.F. for band 6 is 3.5-2.5MHz, for band 7 is 2.5-1.5MHz.

BAND 6	MHz		MHz		MHz	
Singal	6.5	=3.5 VIF	7.0	=3.0 VIF	7.5	=2.5 VIF
Crystal	10.0		10.0		10.0	
Add VIF to crystal	3.5		3.0		2.5	
Resultant image	13.5		13.0		12.5	
Sig/image difference	7.0		6.0		5.0	

Therefore the variable I.F. image frequency is twice the actual V.I.F. tuning frequency, or from 7.0-5.0MHz above the signal frequency for all even bands.

BAND 7	MHz		MHz		MHz	
Signal	7.5	=2.5 VIF	8.0	=2.0 VIF	8.5	=1.5 VIF
Crystal	10.0		10.0		10.0	
Add VIF to crystal	2.5		2.0		1.5	
Resultant image	12.5		12.0		11.5	
Sig/image difference	5.0		4.0		3.0	

Therefore the variable I.F. image frequency is twice the actual V.I.F. tuning frequency, or from 5.0-3.0MHz above the signal frequency for all odd bands.

SECOND I.F. IMAGE

The image we are concerned about, is an unwanted signal arriving at V2 and mixing with the local oscillater frequency to produce an unwanted V.I.F. frequency which will mix with the V.F.O. frequency, to produce the second I.F. frequency of 500KHz.

BAND 6	MHz	MHz	MHz	MHz	MHz	MHz
Wanted signal	6.5		7.0		7.5	
Xtal	10.0	10.0	10.0	10.0	10.0	10.0
Unwanted signal		7.5		8.0		8.5
Resultant V.I.F.	3.5	2.5	3.0	2.0	2.5	1.5
V.F.O.	3.0	3.0	2.5	2.5	2.0	2.0
Second I.F.	.5	.5	.5	.5	.5	.5
Wanted/unwanted difference	6.5-7.5=1.0 HIGH		7.0-8.0=1.0 HIGH		7.5-8.5=1.0 HIGH	
The conditions with V.F.O. at	3MHz		2.5MHz		2MHz	

Therefore the second I.F. image frequency is always twice the second I.F. frequency higher than the signal frequency for all even bands.

EXAMPLES SHOWING CALCULATIONS OF IMAGE

BAND 7

	MHz	MHz	MHz	MHz	MHz	MHz
Wanted signal	7.5		8.0		8.5	
Xtal	10.0	10.0	10.0	10.0	10.0	10.0
Unwanted signal		6.5		7.0		7.5
Resultant V.I.F.	2.5	3.5	2.0	3.0	1.5	2.5
V.F.O.	3.0	3.0	2.5	2.5	2.0	2.0
Second I.F.	.5	.5	.5	.5	.5	.5
Wanted/unwanted difference	7.5-6.5=1.0 LOW		8.0-7.0=1.0 LOW		8.5-7.5=1.0 LOW	
The conditions with V.F.O. at	3.0MHz		2.5MHz		2.0MHz	

From the above table it can be seen that the second I.F. image frequency is always twice the second I.F. frequency lower than the signal frequency for all odd bands.

The chart shows below lists the bands, their frequency ranges, and crystals they use. It enables the technician to trace a faulty band back to the suspect crystal.

Example

Band 26 on the frequency range of 26.5-27.5MHz is inoperative.
To find the crystal used for this band, follow the line which passes through band 26, to the crystal column. The fault can now be isolated to the 10MHz crystal. Other bands which would also be inoperative if this crystal ~~XXXXXX~~ was faulty are bands 6 and 7, 16 and 26 and 27.

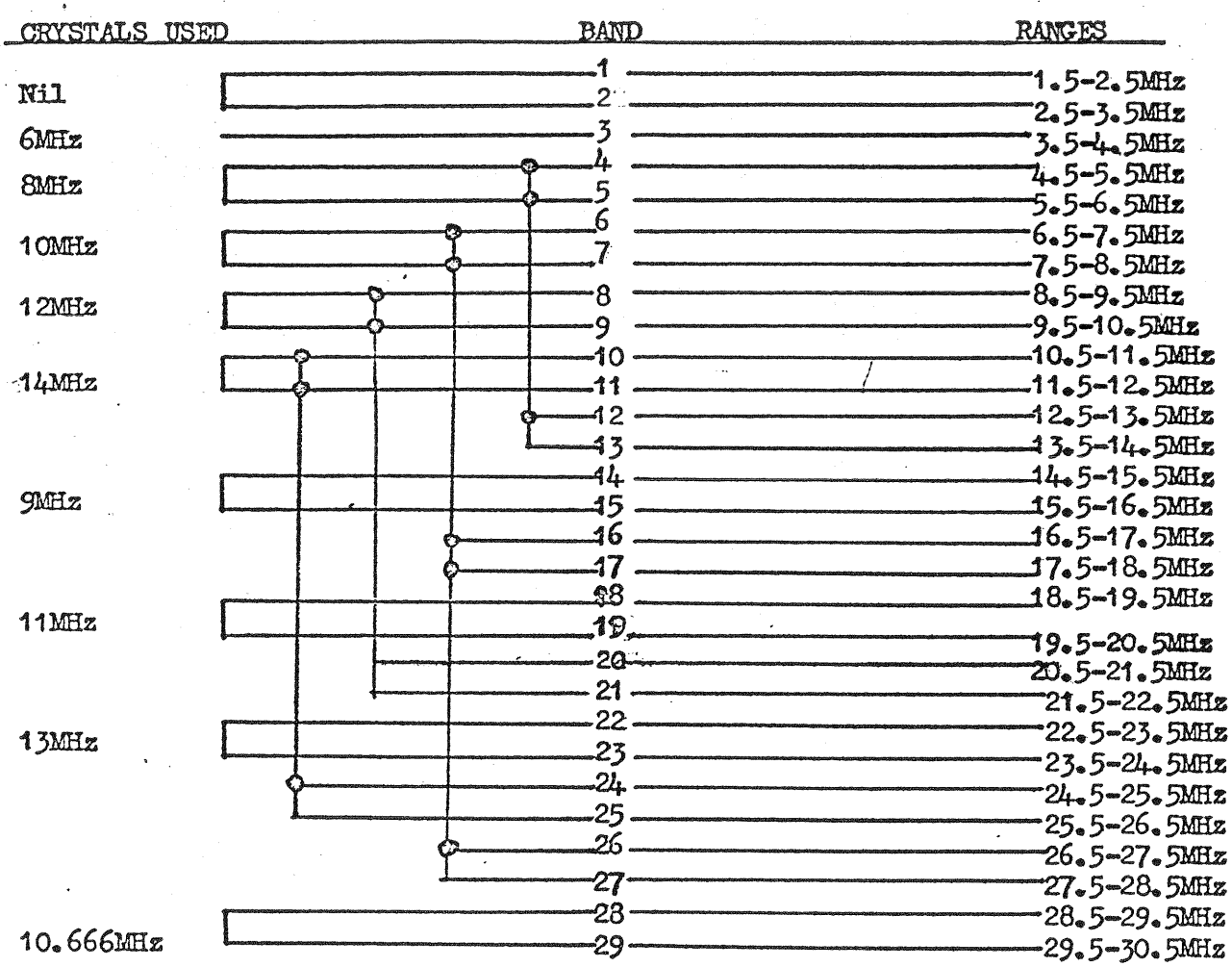

5.0 TECHNICAL DESCRIPTION

The following is a brief technical description of the major units within the receiver.

5.1 Crystal calibrator assembly

The crystal calibrator, which produces calibrating signals spaced 100KHz apart over the whole frequency range of the receiver, is brought into operation by a switch on the front panel.
It anables the setting of the 100KHz cursor to the correct position so that the calibration of the KHz dial is as accurate as possible.

The oscillator uses a 12AT7 valve (V4).
Its output is fed through C93, a 3pf capacitor to the grid of the RF amplifier . When the oscillator is on, a beat note can be heard. The cursor is set to the required position by tuning the knob at the left of the KHz dial.

The calibration switch ON-OFF earths the anode, pin 1 of V4 through an OA95 diode, MR3, so that the valve stops oscillating.

5.2 R.F. Assembly

The aerial [illegible] input circuit is designed to match aerials of 70ohm or 600ohm impedance.

The primary of the aerial coil is inductively coupled to the tuned secondary. The coupling is chosen to give the best signal to noise ratio. An aerial trimmer, which enables peaking of the secondary when detuned by different aerials, is also provided.

All circuits are permeability tuned, i.e. the tuning is performed by the variation of inductance by sliding iron dust cores in and out of the inductors. The cores are moved by cames and the capacitors across the inductors are chosen to give a flat response over the band.

There are five variable inductors tuning the bands,

Band 1:	2.5-1.5MHz
Band 3:	3.5-4.5MHz
Band 5:	5.5-6.5MHz
Band 9:	9.5-10.5MHz
Band 17:	17.5-18.5MHz

Also there are five fixed inductors which are used to pad the variable ones on a number of the remaining bands.
The inductances of all these inductors are determined to give the required L max/L min ratio.

5.4 Variable Frequency Oscillator Assembly

The variable frequency oscillator is of the high stability type. It is thoroughly compensated for drift with temperature and constructed so as to be mechanically rigid.

The permeability tuned inductor is series tuned in the range of 3-2MHz. By using series tuning, high value capacitors can be used so that the frequency is not affected when valves are changed.

The RF developed by the oscillator is taken from the anode of the oscillator valve (6AU6) (V6).

The component values in this circuit are chosen to give maximum possible uniform output over the tuned range so that the conversion conductance of the second mixer should not vary.
The output of the oscillator is fed through a capacitor (C121, 680pf), to the appropriate grid of the second mixer.

5.5 I.F. Amplifier Assembly

the two IF amplifiers both make use of a 6BA6 (V7 and V8).
The screens are fed through series resistors (R48, 220ohm), to improve the control characteristics of the valves.
The interstage coupling transformers are tapped at the secondary to reduce the impedance of the grid circuits.

The IF transformer (L38 and L39) feeding the first amplifier (7) is bottom capacity coupled to the output transformer (L31 and L34) of the variable IF stage (second mixer).

5.6 Detector Assembly

The audio signal which is derived at the detector cathode (V9a) is passed on to the audio box through a noise limiter, consisting of a diode (V9b) in conjunction with an RC network (R58, 1Mohm and C147, 0.01mf).
The limiter is working only in position 2 and 4 of the switch SW10, which also allows single set working in position 1 and 2 and dual diversity working in position 3 and 4.

The detector itself is of the infinite impedance type (valve V9a), the grid signal being obtained from the last IF amplifier, through an IF transformer.

The BFO (V11b) using a Clapp circuit injects its output, obtained across a plate resistor, (R61, 82Kohm), into the grid circuit of the detector by means of a low impedance tap on the secondary of the IF transformer.

The BFO frequency can be controlled over a range of approx.12.5KHz with the (25pf max.) variable capacitor C149.
Switching of the BFO is carried Out on the function swifch SW11.

A.G.C. singal, which is only used in the R.T. position of the function switch is derived from a tap on the primary of the IF transformer. This signal is rectified between one of the diode plates and cathode of V10 (type 6AV6).

This signal is then amplified in the triode section of V10, the cathode of which will go negative increasing signal strength.
The A.G.C. signal for the IF stages is taken from this cathode.
V11a prevents the cathode of V10 from going positive on low input signals.
This arrangement also provides some thresholding of the A.G.C.

A.G.C. for the RF amplifier is obtained from the second diode of V10, which has a -2V bias. Only when the cathode falls lower than -2V will this delayed A.G.C. become operative. When used for diversity reception the switch SW10 allows in positions 3 and 4 reciprecal control of the gain of the two receivers. For this application, the two detector cathodes should be interconnected. The same Outlet (terminal 9 on the detector box) is used to couple the receiver to the F.S. adaptor when required through the coaxial socket on the front panel.

5.7 Audio Amplifier Assembly

The power amplifier uses a pentode type valve 6AM5 (V13) the screen of which is fed through a series resistor, (R83, 47Kohm), which limits the plate current to a low value. Under these conditions, the output power available at the speaker terminals is limited to approx. 200mW at 1000Hz.
The fixed grid bias voltage is derived from the -50V supply through a potentiometer arrangement and the input signal to the power amplifier is controlled in level by potentiometer R70 (500Kohm).
The second half of V12 is used as an audiopre-amplifier.
The signal coming from the detector box passes through an audio filter using a type 12AT7 double triode (V12). For all positions of the function switch is controlled by variable resistor R68, (500Kohm), merely acts as a low pass filter, or tone control. In the last two positions of the function switch, it attenuates all frequencies except a narrow range approx. 250Hz wide. This pass band of the filter can be shifted throughout the audio range.

5.8 Power Supply Assembly

The power transformer is adaptable for following imputs:

Group I: 260V, 240V, 220V, 200V, AC.
Group II: 130V, 120V, 110V, 100V, AC.
Group III: 24V, DC.

Selection of the mains voltage within each group is carried out with the mains selector switch (carousel). Selection of the correct group takes place by inserting the correct power cable into the mains socket on the front panel. These operations are the only operations required to make the set suitable for the required mains supply.

The power transformer carries a tapped HT winding, which provides the positive voltage 190V through the rectifier V14 (type 6X4 and the L.C. filter, L44, C153 and also the negative supply -50V through the selenium rectifier W2 and the R.C. filter C154, R69, and C152.

From the two filament windings one feeds the rectifier V14, whereas the other feeds all other valves and lamps.

The latter winding is balanced with respect to ground.

For 24V D.C. operation, a 100Hz non-synchronous vibrator is used. A special automatic switching circuit has been incorperated to reduce the effect of switching surges on the vibrator.

6.0 OVERALL SPECIFICATION TESTS

6.1 Test Equipment Required

(1) Model 8 AVO meter.
(2) Variac.
(3) 24 volt battery and charger.
(4) Hewlett Packard V.T.V.M.
(5) Millivoltmeter Philips GM6005 or similar.
(6) RF signal generator Marconi type TF867/2.
(7) Audio oscillator.
(8) Beat frequency oscillator Philips.
(9) Distortion and noise meter A.W.A.
(10) Frequency sub standard.
(11) Receiver-Philips BX729A or similar.
(12) Frequency counter.

6.2 Meter Readings

The meter readings in all cases except HT, int. test, 'S' and audio positions should be approx. half scale, and preferably on red portion of scale.

For HT and int. test positions, the meter reading should be 190 ±20V DC.

The meter reading in position 'S' and audio are checked separately.

Control Settings

Voltage tap (carousel) set to 250V.
Function switch- MCW.
Filter tuning- max. C/W.
Audio gain- max.
Noise limiter and diversity switch- single, OFF.
RF gain- max.
Light switch- OFF.
Calibration switch- OFF.

Procedure

Apply A.C. input voltage of 250 volts from variac.
Ensure that meter reads for positions:

H.T.
V1-3
V4-5
V6
V7
V8
V9-11
V12-13
Int, test

} of metering switch.

For internal test position the built in tests prods should be connected to H.T.

The meter reading in all cases except HT and int. test should be approx. half scale and preferably on red portion of scale.

For HT and int. test the reading should be 190 ±20V DC.

The meter readings in position 'S' and audio are checked separately.

6.3 Sensitivity Test

Requirement is for greater than 10mW in 600ohm audio output, with an input of 2 micro volt.
30% modulation at 400Hz on all bands.

S+N/N ratio to be greater than 6dB when the output is 10mW.

6.3.1 Sensitivity Measurments

Connect signal generator, with output impedance set to 75ohm, to aerial terminals output level to be 2 micro volt.
The setting of the receiver controls:

Power	ON.
Audio gain	Max. gain.
Function	MCW.
Tone	Min.
Limiter	OFF.
Tuning, Band change	as required.
Calibrator	OFF.
RF gain	Max. gain.

The aerial trimmer should be adjusted at each measurement for max. sensitivity.

Set the signal generator and the receiver to the centre frequency of each band in turn. The D10 terminals of the receiver should be terminated in 600Ohm.

Measure and record the output level obtainable across the 600ohm resistor. This level should exceed 10mW.

Reduce the output level ~~XXXXXX~~ to 10mW. by means of the audio gain control. Swich the Marconi signal generator to CW.
The output level should now decrease by at least 6dB below 10mW.
Record this reduction in reading as the S + N/N ratio.

6.4 Selectivity Test

6dB bandwidth to not less than ± 2KHz.
60dB bandwidth to be not greater than ±12KHz.

6.4.1 Selectivity Measerments

Set the signal generator and receiver controls as in para 6.3.1, except signal generator output level is set to 50 micro volt and the audio volume control is set to minimum gain.

Set signal generator frequency to 1.75MHz and tune receiver to this frequency , monitor detector output level using H.P. V.T.V.M. and adjust RF gain control to give a level of 15 volts DC.

Increase input from signal generator by 6dB and detune signal generator on either side of centre frequency to again give 15 volts DC.
Do not retune aerial trimmer for off centre frequencies.

Selectivity should not be less than + or - 2KHz.

Increase input level from signal generator to 60dB greater than 50 micro volt and detune signal generator as before.

Selectivity should be not greater than + or-12KHZ.

6.5 Spurious Responses

Image at 24.5MHz

The image frequency of 27.5MHz, when receiver tuned to 24.5MHz, to be 35dB below the response at 24.5MHz.

6.5.1 Test Procedure

The receiver is set to the 23.5-24.5MHz band and tuned to 24.5MHz. The signal generator is set at 24.5MHz, modulated 30% by 1000Hz, and output level is 2 micro volt. All receiver controls are as for para. 6.3.1, except the audio gain control, which is set to give 10mW audio output. (Tune the trimmer for max.).

Leaving the receiver controls set as above, retune the signal generator to 27.5MHz. Increase the output from the signal generator until 10mW audio output is again obtained. The increase in output from the signal generator must be at least 35dB above 2 micro volt.

6.6 Automatic Gain Control

Variation of output level and input

For an input variation of 1 micro volt to 0.1 volt, the output level should not vary by more than 4dB.

6.6.1 Test Procedure

Set the signal generator to a frequency of 3MHz., and set input to 1 micro volt with RF gain set to max.
Adjust audio gain control to give 10mW output, and then increase input level to 0.1 volt.

The output level should not change by more than 4dB.
For this test the function switch of the receiver is in R.T. position. All other controls are as for para. 6.3.1.

6.7 Filter Control Stability

With no input signal and the RF and AF gain controls at max., the receiver shall be stable over the tuning range of the filter control.

6.7.1 Test Procedure

Set the receiver function switch to MCW.
RF control and audio gain control to maximum.
Connect the oscilloscope across the 600ohm load.
Oscillation should not occur when the filter control is adjusted.

6.8 Crystal Calibration Accuracy

The frequency of the 100KHz crystal oscillator, when checked at 5MHz, shall be within 100Hz of this frequency (in an ambient temperature of $20^{o}C \pm 5^{o}C$).

6.8.1 Test Procedure

Remove signal generator from receiver aerial terminals.

Switch on crystal calibrator and couple output of calibrator into an other receiver tuned to 5MHz.
A 5MHz signal from a crystal oscillator is also fed into this receiver and the frequency of the beat note checked using a frequency counter. The frequency difference should be less than 100Hz and if necessary it may be adjusted to within this limit by means of C27 in the crystal calibrator box.

6.9 Resetting Accuracy

At all frequencies, the resetting error of the band switch and tuning control should not be more than 2KHz.

6.9.1 Test Procedure

(a) Errors due to band switch

Set signal generator accurately to 27.5MHz (by means of the internal crystal calibrator).
Set the signal generator output level to 10 micro volt, CW, output impedance 75ohm. Connect to the receiver aerial terminals.

Tune the receiver to this frequency on the 26.5-27.5MHz band and lock. (Approach dial setting from nearest dial extremity to avoid backlash). Measure the IF frequency with the frequency counter.

Without altering the tuning, switch the band to the 30MHz with the band switch, and return.
Repeat IF measurement.
Now switch the band switch to the 24MHz band return, and again repeat the IF measurement.

The error in IF frequency when returned to original setting should be less than 2KHz.

Note:

The frequency of the signal generator must be checked before each measurement is made.

(b) Errors due to tuning (backlash)

With the input as above, note the fine tuning indication and also the IF frequency. Alter the tuning of the receiver to the opposite end of the band, and return to the original fine tuning setting.

Note the change in IF frequency, which should be less than 2KHz.

(c) Repeat (a) and (b) at 26.5MHz on the 26.5-27.5MHz band, and record frequency errors as above.

Note

The frequency of the signal generator must be checked by electronic couter before each measurement.

6.10 B.F.O. Frequency Range

The BFO should be capable of a variation of ±2.5KHz about a frequency of 500KHz.

6.10.1 Test Procedure

Whit the receiver and signal generator set to 6MHz, and output level from signal generator at 1 micro volt, switch on the BFO and ensure that the audio note can be adjusted to at least 2.5KHz on either side of zero beat using the BFO tuning control. The frequency counter is used to measure the best note, and is connected to the 600ohm output terminals.

6.11 B.F.O. Effectiveness

The audio output due to a 5 micro volt signal on CW should be at least 9dB higher than that resulting from the same signal modulated to a depth of 30%.

Modulating signal and BFO note to be approx. 400Hz.

6.11.1 Test PRocedure

With the receiver and signal generator still set up as above and function switch in CW position, adjust signal generator output to 5 micro volt on a CW signal.
Adjust BFO note to 400Hz and adjust audio gain control to max. and RF gain to 20mW output.
Switch off BFO and adjust [redacted] modulation of signal generator to a depth of 30% at 400Hz.
Measure output level, to be at least 9dB down on 20mW.
The position of the function switch on the receiver is CW and MCW for BFO 'ON' and BFO 'OFF' respectively.

6.12 'S' Meter

This meter shall be calibrated in ten arbitrary divisions and shall indicate signals varying from approx. 1 micro volt to 1 volt.

6.12.1 Test Procedure

Using the signal generator set to 6MHz and the receiver tuned to this frequency (function switch in RT position), check operation of the 'S' meter.

With 1 micro volt input 'S' meter should read approx. zero and with 1 volt input reading should be approx. 10 divisions i.e. full scale deflection.

6.13 Calibration Accuracy

The tuning law of the VFO shall be such that, with 2.5MHz as the reference, the oscillator frequency at all 100KHz points shall be within 5KHz of the nominal frequency.
The error at the intermediate 50KHz points shall be within 2KHz, of that error measured at two adjacent 100KHz points.

6.13.1 Check Tracking

(a) Set tuning jig to the low end of its range.

(b) Set tuning jig to 2MHz and check frequency, using frequency measuring device.

(c) Increase frequency setting in steps of 50KHz and check frequency at each step.
Record frequency error at each 50KHz point and record.

Note:

To avoid backlash set scale to frequency by approaching from low frequency side.

6.14 Operation from DC Supply

With a supply voltage of 22V and 26V measured at the battery terminals and a RF input signal of 2 micro volt modulated 30% at 400Hz, the audio output shall not be less than 15mW into 600ohm and signal plus noise to noise ratio shall not be less than 3dB.
This test shall be conducted at 5MHz with the equipment at room temperature.

6.14.1 Sensitivity Measurements at 22V as well as 26V DC

Connect signal generator, with output impedance set to 75ohm, to aerial terminals. Modulation should be 30% at 400Hz, and output level to be 2 micro volt.

The setting of the receiver controls:

Power	ON.
Audio gain	Max. gain.
Function	MCW.
Tone	Min.
Limiter	OFF.
Tuning, Band change	5MHz.
Calibrator	OFF.
RF gain	Max. gain.

The aerial trimmer should be adjusted at each measurement for max. sensitivity. The D10 terminals of the receiver should be terminated in 600ohm.

Measure and record the output level obtainable across the 600ohm resistor. This level should exceed 15mW.

Reduce the output level to 15mW by means of the audio gain control, switch the signal generator to CW.
The output level should now decrease by at least 3dB below 15mW.
Record this reduction in reading as the S + N/N ratio.

6.15 Audio Performance

6.15.1 Audio Output

With an audio input of 1000Hz at a level of 2.5V injected into the IF outlet, the following audio outputs should be obtained simultaneously:

(i) Not less than 150mW into a 9ohm resistor (speaker off position).

(ii) Not less than 30mW into a 600ohm resistor connected across the D10 terminals.

(iii) Not less than 10mW into a 75ohm resistor connected across the phone terminals.

(a) Test Procedure

The output of the audio generator set at 1000Hz is injected into the IF outlet socket and set to 2.5 volts.
A coupling capacitor of 1mF or more must be used in the lead.

The output levels are measured using the GM6005 or similar millivoltmeter.

The outputs of the following measurments should be obtained simultaneously.

Greater than 0.865 volts across the phone terminals terminated by 75ohm, greater than 4.24 volts across the D10 terminals terminated by 600ohm, and greater than 1.16 volts across the 9ohm internal load in the speaker OFF position.

Note:

For this test the speaker should be OFF, and the function switch in RT with the limiter OFF.

Also the filter control must be set to minimum for this test.

6.15.2 Audio Frequency Response

The output between 300Hz and 4000Hz shall not vary by more than 3dB from that obtained at 1000Hz, measured across the 9ohm resistor, and with the tone control at minimum.

(a) Test Procedure

The frequency response is taken using the set up of (a) above and adjusting the audio gain control to 10mW output.
The millivoltmeter is connected across the 600ohm resistor to measure this response which is checked at 300Hz and 400Hz and must be within 3dB of that at 1000Hz.

Note:

The filter control must be set to minimum.

6.15.3 Audio Filter Bandwidth

With an audio input level of 2.5V injected at the IF outlet, the audio filter should have a tuning range of 500Hz to 2.5KHz.
It should also have a 3dB bandwidth of 160-350Hz and a 10dB bandwidth of 450-850Hz at 1000Hz.

(a) Test Procedure

The output of the audio generator set at 1000Hz injected into the IF outlet plug PL2 and the level is set to 2.5 volts.

The function switch on the receiver is set to MCW filter and the filter tuning is adjusted to give a peak output reading on the millivoltmeter connected across the 600ohm load.

The frequency of the audio generator is varied to obtain the frequencies at which the response is 3dB down and 10dB down.

The total frequency bandwidth at 3dB points should be 160-350Hz and at the 10dB points 450-850Hz.

The tuning range of the filter should also be checked and should extend from 500-2500Hz, i.e. the filter control should be capable of giving a peak in the output when the audio generator is tuned to these frequencies.

6.16 Overall Harmonic Distortion

The overall harmonic distortion with an RF input of 1 micro volt modulated 30% at 1000Hz, and the audio output level set to 20mW into a 600ohm, shall not exceed 10%.

6.16.1 Test Procedure

Connect the distortion and noise meter across the D10 terminals of the receiver.

Set the signal generator to 6MHz, output level 1 micro volt, and modulated 30% at 400Hz, and connect to the aerial terminals of the receiver.

Tune the receiver to this frequency, tune the trimmer to a peak.
Set function switch to RT position.
Adjust audio gain control to give 20mW into the 600ohm load across the D10 terminals. (RF gain is at max.).
Noise limiter is switched off.

The distortion as read by the D and N meter across the D10 terminals shall be less than 10%.

6.17 Frequency Stability Characteristic

For any signal input between 60 micro volt and 0.1 volt, the beat frequency output from the receiver shall not change by more than 100Hz.

6.17.1 Test Procedure

Frequency variation with input SINGAL

Set the signal generator to 30MHz CW output level of 10 micro volt, 75ohm output impedance, and connect to the aerial terminals of the receiver under test.
The receiver is tuned to this frequency.
The IF output of the receiver is loosely coupled to an other receiver, which is tuned to 500KHz.

The output from a 500KHz crystal oscillator is also loosely coupled to an other receiver, and the receiver under test is tuned to give a beat note of approx. 3KHz.
This beat note is monitored by the frequency counter.

The output level from the signal generator is now increased to 0.1 volt and the change in frequency of the beat note is recorded.
This change in frequency should be less than 100Hz.

TABLE 2

Summery of paragraphs 6.1 - 6.17

RECEIVER CONTROLS AS BELOW UNLESS OTHERWISE NOTED

Mains 250V AC
Carousel 250V AC
Function switch MCW
Filter tuning fully clockwise
Audio gain fully clockwise
RF gain fully clockwise

Noise limiter and diversity switch OFF
Light switch OFF
Calibration switch OFF

A 600ohm resistor must be connected permonently across the D10 terminals.

PARA	PERFORMANCE CONDITIONS	INPUT CONDITIONS	OUTPUT CONDITIONS
6.2	Meter Readings Red area ±5% 190V ±20V DC	V1-3, V4-5, V6, V7, V8, V9-11, V12-13 H.T.	
6.3	Sensitivity Test 10mW or more across D10 2 micro volt 30% at 400Hz S/N 6dB or more at 10mW	2 micro volt 30% at 400Hz	10mW or more at D10 3dB or more at 10mW
6.4	Selectivity Test 6dB or more ± 2KHz 60dB or less ±12KHz	Ref. 50 micro volt at 1.75MHz 50 micro volt + 6dB 50 micro volt +60dB at 30% at 400Hz	Audio gain min. 15V DC PL2 Ref.
6.5	Spurious Responses 27.5MHz image, band 23 35dB or more of 24.5MHz, band 23	Ref. 2 micro volt 30% at 400Hz 24.5MHz band 23 Shift Gen. to 27.5MHz	10mW - D10 Ref.

TABLE 2
(continued)

PARA	PERFORMANCE CONDITIONS	INPUT CONDITIONS	OUTPUT CONDITIONS
6.6	Automatic Gain Control Input 1 micro volt-0.1V Output less than 4dB	1 micro volt 30% at 400Hz 3.0MHz 0.1V	10mW - D10 less than 4dB change
6.7	Filter Control Stability R.F. and A.F. fully clockwise Stable over filter range.	No signal	C.R.O. across D10 Signal stable over range of filter control.
6.8	Xtal Cal. Accuracy When checked at 5MHz to be less than 100Hz error.	No signal	Calibrator switch ON. Additional receiver. Calibrated 5MHz test osc. Frequency counter. Beat 100Hz or less.
6.9 (a) (b)	Resetting Accuracy Errors due to band switch less than 2KHz. Errors due to tuning less than 2KHz.	10 micro volt CW 27.5MHz band 26. Shift to band 30 & back to 26. 10 micro volt CW 27.5MHz band 26. Shift Rx to 26.5MHz & back to 27.5MHz. Repeat with 26.5MHz Ref.	Frequency counter to PL2. 2KHz or less difference. 2KHz or less difference. 2KHz or less difference.
6.10	B.F.O. Freq. range 500KHz ±2.5KHz.	1 micro volt CW at 6MHz	Function switch to CW. Frequency counter to PL2. Check range.
6.11	B.F.O. Effectiveness 5 micro volt CW more than 9dB above 30% modulation at 400Hz.	5 micro volt CW 3.0MHz 5 micro volt 30% 400Hz 3.0MHz	20mW D10 B.F.O. switch ON-OFF Check 9dB or more.

TABLE 2

(continued)

PARA	PERFORMANCE SPECIFICATIONS	INPUT CONDITIONS	OUTPUT CONDITIONS
6.12	'S' Meter		Function switch R.T.
	1 micro volt is about 0	1 micro volt 6.0MHz	meter about 0
	1.0V is about 0	1.0V 6.0MHz	meter about 10
6.13	V.F.O. Calibration Accuracy		
	2.5MHz Ref. 100KHz points ±5KHz of nominal Intermediate 50KHz points ±2KHz of error at adjacent 100KHz points	From 2.0-3.0MHz Check every 50KHz	50KHz steps 2KHz or less 100KHz steps max. ±5KHz
6.14	Output from DC supply		
	22V and 26V DC O/P 15mW or more D10 S/W 3dB or more at 15mW Input 2 micro volt 30% - 400Hz at 5MHz	2 micro volt 30% 400Hz at 5MHz	15mW or more D10 3dB or more at 15mW
6.15	Audio Performance	2.5V at 1000Hz in at PL2	R.F. gain - OFF
(a)	Output		
	2.5V at 1000Hz in at PL2 150mW or more - 9ohm) 30mW or more - 600ohm) simultaneously 10mW or more - 75ohm)	1mF condenser	9ohm 1.16V or more 600ohm 4.24V or more 75ohm 0.865V or more
	A.F. Response	2.5V at 1000Hz ref.	10mW D10
	Same input voltage 300Hz or less- 4KHz Ref. 1000Hz - 9ohm	2.5V at 300Hz) 2.5V at 4KHz) In at PL2.	3dB or less

TABLE 2

(continued)

PARA	PERFORMANCE SPECIFICATIONS	INPUT CONDITIONS	OUTPUT CONDITIONS
6.15	Audio Performance Some input voltage 500Hz - 2.5KHz 3dB 160 - 350Hz 10dB 450 - 850Hz Ref. 1000Hz.	2.5V in at PL2 Frequencies as required.	Function switch MCW - filter. peak filter at 1000Hz Check bandwidths
6.16	Distortion 1mV 30% 1000Hz 10% or less Output 20mW at D10	1mV 30% 1000Hz at 6MHz	Function switch R.T. 20mW at D10 10% or less.
6.17	Frequency Stability 60 micro volt - 0.1V 100Hz or less	10 micro volt at 30MHz CW. 0.1V at 30MHz CW.	PL2 to additional Rx Cal. 500KHz Osc. to Rx. Frequency couter to check beat.

7.0 FAULT FINDING DATA

7.1 Prior to taking voltage measurements, controls of the receiver must be set as follows:

(a) Set carousel voltage plug to correct main voltage.
(b) Speaker OFF.
(c) Audio gain control at max.
(d) RF gain control at max.
(e) Filter control at max.
(f) Limiter switch to OFF.
(g) Function switch to MCW.
(h) Calibration switch to OFF.

7.2 DC analysis at pins and feed through points.
Refer to fig. TP290-40/41 for locations etc.
All readings taken using multimeter AVO model 8.

TABLE 3

Voltage analysis of feed through pots (F.T.P.) taken with aerial terminals (9) fig. 1 shorted together and earthed.
Receiver band switch (16) fig. 1 in position 3 (3.5-4.5MHz).
Other conditions as per para. 7.1, and using a model 8 AVO.

R.F. BOX

F.T.P.	
1	- 0.25V DC.
2	+200. V DC.
14	+170. V DC.
2 & 3	6.4 V AC.
5, 6, 7, 8, 9, 10, 11, 12, 13, 15, 16, 17	Not applicable

RF voltages only.

XTAL CAL BOX

F.T.P.	
1	+200. V DC.
4	Zero
5	- 43. V DC.
6	+200. V DC.
7	Zero
2 & 3	6.3 V AC.

V.I.F. BOX

F.T.P.	
1	+200. V DC.
4	+200. V DC.
5	+ 0.05 V DC.
6	Zero
7	+170. V DC.
2 & 3	6.35 V AC.

TABLE 3

(continued)

V.F.O. BOX

F.T.P.	
1	Zero
2	+200. V DC.
5	Not applicable RF voltage
3 & 4	6.2 V AC.

FIRST IF BOX

F.T.P.	
1	+160. V DC.
4	+200. V DC.
5	- 0.1 V DC.
6	+200. V DC.
7	+200. V DC.
2 & 3	6.4 V AC.

SECOND IF BOX

F.T.P.	
1	+155. V DC.
4	+200. V DC.
5	- 0.1 V DC.
6	+160. V DC.
7	+160. V DC.
2 & 3	6.4 V AC.

DETECTOR BOX

F.T.P.	Function switch 'MCW'	'CW'
1	+ 5.5 V DC.	+ 10.0 V DC.
4	+200. V DC.	
5	- 43. V DC.	
6	- 0.4 V DC.	
7	- 0.15 V DC.	
8	- 0.4 V DC.	
9	+ 6. V DC.	
10	- 0.15 V DC.	+ 10.0 V DC.
11	- 0.1 V DC.	+200. V DC.
12	- 23. V DC.	
13	+155. V DC.	
2 & 3	6.4 V AC.	

TABLE 3

(continued)

F.T.P.	ADIO BOX
1	+185. V DC.
4	+200. V DC.
5	- 43. V DC.
6	- 0.4 V DC.
7	+ 5.8 V DC.
8	- 0.1 V DC.
9	Zero
10	- 0.15 V DC.
11	- 1.25 V DC.
12	Zero
13	+ 2.4 V DC.
14	+ 2.4 V DC.
15	+200. V DC.
16	+200. V DC.
2 & 3	6.35 V AC.

7.3 DC Analysis at valve bases

All measurements taken with aerial terminals (9) fig.1 shorted together and earthed. Receiver band switch (16) fig.1 in position 3 (3.5-4.5MHz). Other conditions of receiver as per para. 7.1, voltage table compiled using valve extender.
Resistance table compiled with valves cold, and valve concerned removed from receiver.
The negative lead of AVO model 8 was attached to chassis.

TABLE 4

Electronic Tube Base Analysis

V1	6BA6	TUBE ELEMENT	VOLTAGE	RESISTORS	REMARKS
Pin	1	Control Grid	-0.25V DC	3.4Mohm	
	2	Supp.	Zero	Zero	
	3 & 4	Heaters	6.4V AC	Zero	
	5	Anode	+140V DC	110Kohm	
	6	Screen Grid	+ 90V DC	130Kohm	
	7	Cathode	Zero	Zero	

V2	6BE6	TUBE ELEMENT	VOLTAGE	RESISTORS	REMARKS
Pin	1	Control Grid	-0.6V DC	3.4Mohm	
	2	Cathode	Zero	Zero	
	3 & 4	Heaters	6.4V AC	Zero	
	5	Anode	+170V DC	110Kohm	
	6	Screen Grid	+ 48V DC	150Kohm	
	7	Injection Grid	-0.35V DC	1Mohm	

V3	6AU6	TUBE ELEMENT	VOLTAGE	RESISTORS	REMARKS
Pin	1	Control Grid	-0.1V DC	225Kohm	
	2	Supp. Grid	Zero	12ohm	
	3 & 4	Heaters	6.3V AC	Zero	
	5	Anode	+125V DC	130Kohm	
	6	Srceen grid	+ 95V DC	215Kohm	
	7	Cathode	+0.1V DC	12ohm	

V4	12AT7	TUBE ELEMENT	VOLTAGE	RESISTORS	REMARKS
Pin	1	Anode	+130V DC	230Kohm	Cal. box switched ON. Voltages measured with HP model 410B VTVM as AVO 8 disturbs operating conditions.
	2	Contol Grid	+ 56V DC		
	3	Cathode	+ 60V DC		
	4/5 & 9	Heaters	6.3V AC		
	6	Anode	+ 56V DC		
	7	Controle Grid	-0.2V DC	470Kohm	
	8	Cathode	+4.0V DC	115Kohm	

TABLE 4

(continued)

V5	6BE6	TUBE ELEMENT	VOLTAGE	RESISTANCE	REMARKS
Pin	1	Control Grid	Zero	1.25Mohm	
	2	Cathode	+1.9V DC	550ohm	
	3 & 4	Heaters	6.3V AC	Zero	
	5	Anode	+180V DC	108Kohm	
	6	Screen Grid	+ 60V DC	160Kohm	
	7	Injection Grid	Zero	23Kohm	

V6	6AU6	TUBE ELEMENT	VOLTAGE	RESISTANCE	REMARKS
Pin	1	Control Grid	-0.2V DC	112Kohm	voltages
	2	Supp. Grid	Zero	Zero	measured with HP
	3 & 4	Heaters	6.3V Ac.		410B VTVM as AVO
	5	Anode	+170V DC	115Kohm	8 disturbs
	6	Screen grid	+ 90V DC	220Kohm	operating
	7	Cathode	+1.3V DC	400ohm	conditions.

V7	6BA6	TUBE ELEMENT	VOLTAGE	RESISTANCE	REMARKS
Pin	1	Control Grid	-0.02V DC	270Kohm	Stage may
	2	Supp. Grid	Zero	Zero	oscillate
	3 & 4	Heaters	6.3V AC		when extender
	5	Anode	+160V DC	108Kohm	for tube used.
	6	Screen Grid	+ 85V DC	160Kohm	
	7	Cathode	+1.6V DC	240ohm	

V8	6BA6	TUBE ELEMENT	VOLTAGE	RESISTANCE	REMARKS
Pin	1	Control Grid	-0.02V DC	340Kohm	Stage may
	2	Supp. Grid	Zero	Zero	oscillate
	3 & 4	Heaters	6.3V AC		when tube
	5	Anode	+160V DC	110Kohm	extender
	6	Screen Grid	+ 80V DC	155Kohm	used.
	7	Cathode	+1.5V DC	250ohm	

V9	12AT7	TUBE ELEMENT	VOLTAGE	RESISTANCE	REMARKS
Pin	1	Anode	+4.6V DC	1.5Mohm	
	2	Control Grid	+4.6V DC	1.5Mohm	
	3	Cathode	+5.6V DC	230Kohm	
	4/5 & 9	Heaters	6.3V AC		
	6	Anode	+150V DC	110Kohm	
	7	Control Grid	Zero	13ohm	
	8	Cathode	+5.0V DC	230Kohm	

TABLE 4

(continued)

V10	6AV6	TUBE ELEMENT	VOLTAGE	RESISTANCE	REMARKS
Pin	1	Control Grid	-0.2V DC	600Kohm	
	2	Cathode	-0.15V DC	80Kohm	
	3 & 4	Heaters	6.3V AC		
	5	Diode 2	-0.4V DC	1.7Mohm	
	6	Diode 1	-0.4V DC	2.2Mohm	
	7	Anode	+150V DC	110Kohm	

V11	12AT7	TUBE ELEMENT	VOLTAGE	RESISTANCE	REMARKS
Pin	1	Anode	+50V DC	180Kohm	Function switch to CW for both voltage and resistance tables.
	2	Control Grid	-0.3V DC	112Kohm	
	3	Cathode	+0.02V DC	13ohm	
	4/5 & 9	Heaters	6.3V AC		
	6	Anode	-0.15V DC	80Kohm	
	7	Control Grid	-0.15V DC	80Kohm	
	8	Cathode	Zero	Zero	

V12	12AT7	TUBE ELEMENT	VOLTAGE	RESISTANCE	REMARKS
Pin	1	Anode	+110V DC	150Kohm	
	2	Control Grid	+2.2V DC	55Kohm	
	3	Cathode	+3.8V DC	42Kohm	
	4/5 & 9	Heaters	6.3V AC		
	6	Anode	+200V DC	100Kohm	
	7	Control Grid	Zero	2Mohm	
	8	Cathode	+2.5V DC	50Kohm	

V13	6AM5	TUBE ELEMENT	VOLTAGE	RESISTANCE	REMARKS
Pin	1	Control Grid	-0.25V DC	2.2Mohm	
	2	Cathode	Zero	Zero	
	3 & 4	Heaters	6.3V AC		
	5	Anode	+180V DC	100Kohm	
	6	N.C.			
	7	Screen Grid	+120V DC	150Kohm	

TABLE 4

(continued)

V14	6X4	TUBE ELEMENT	VOLTAGE	RESISTANCE	REMARKS
Pin	1	Anode	215V AC	80ohm	Caution
	2	N.C.			The heater is at +240 DC potential above earth.
	3 & 4	Heaters	6.3V AC	100Kohm	
	5	N.C.			
	6	Anode	215V AC	80ohm	
	7	Cathode	+240V DC	100Kohm	
MISCELLANEOUS					
C155) C153)	both ends of L44		+240V DC +200V DC	100Kohm 100Kohm	
Neg. supply (W2)			-51V DC	36Kohm	
C152			-44V DC	35Kohm	

7.4 Stage gain

Stage gains as such, are not nominated .
All boxes were 'jig tested' prior to insertion in receivers.
This was on the basis of a GO - NO GO system, and input / output voltages etc. were never quoted as an absolute quantity but rather as a percentage of a meter scale, against a calibration point on the same scale.

However, as a fault finding aid in the testing of the receivers, a method was evolved which is shown in fig. 'X' and 'Y'.

Assume that a receiver does not meet the S + N/N ratio, or output specification. Adiagnosis must be made as to which stage is at fault.

Referring to fig. 'X' 2.5 V.A.C. 1000Hz is applied to PL2 and an output of more than 30mW across D10 terminals, terminated with 600ohm must be obtained. This indicates acceptability of the audio box.
If this output can not be obtained the box is suspect and should be removed for bench checking.

Referring to fig. 'Y' - If the acceptability of the audio box is established, the V.I.F. through to the detector stages can be checked as follows:

A 500KHz signal is applied to pin 6 of the V.I.F. box.
The input level of the signal is adjusted until 15 V.D.C. output is obtained at PL2.
This input voltage should be less than 70 micro volt.
If more, a box in the sequence is suspect.
Less than 60 micro volt at 500KHz at pin 6 of No.1 I.F. box should produce 15 V.D.C. at PL2.

Approx. 5mV at 500KHz at pin 6 No.2 I.F. box should also produce 15 V.D.C. at PL2.

If acceptability of the boxes in the V.I.F. - Detector chain is established, the R.F. box becomes suspect.

FIGURE X

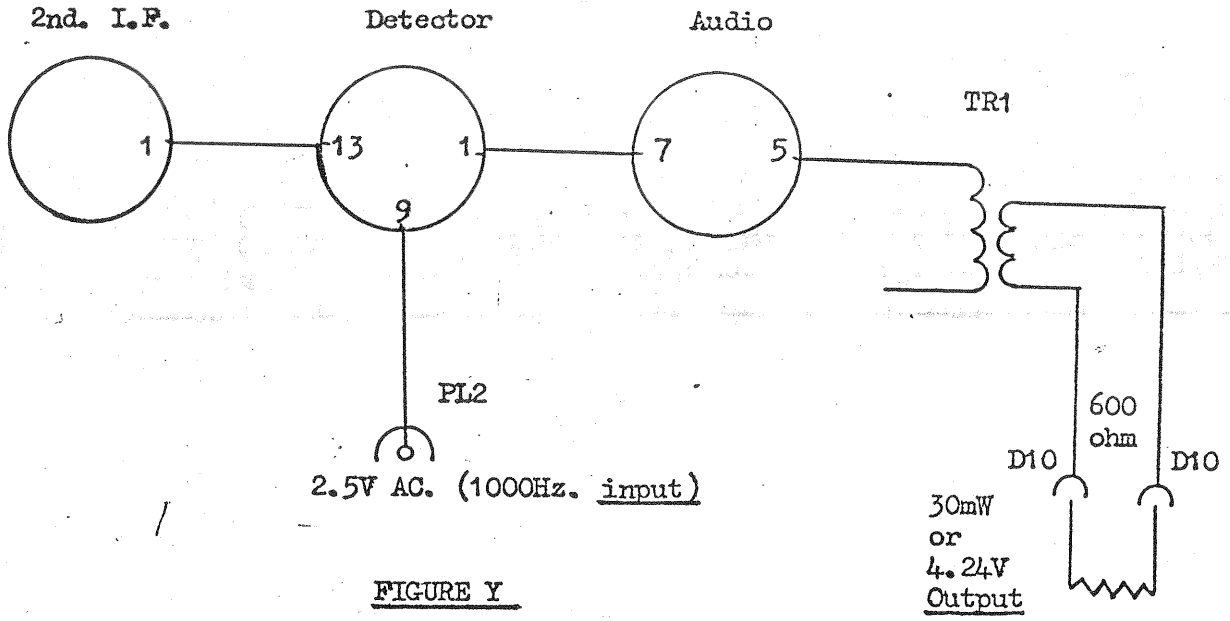

FIGURE Y

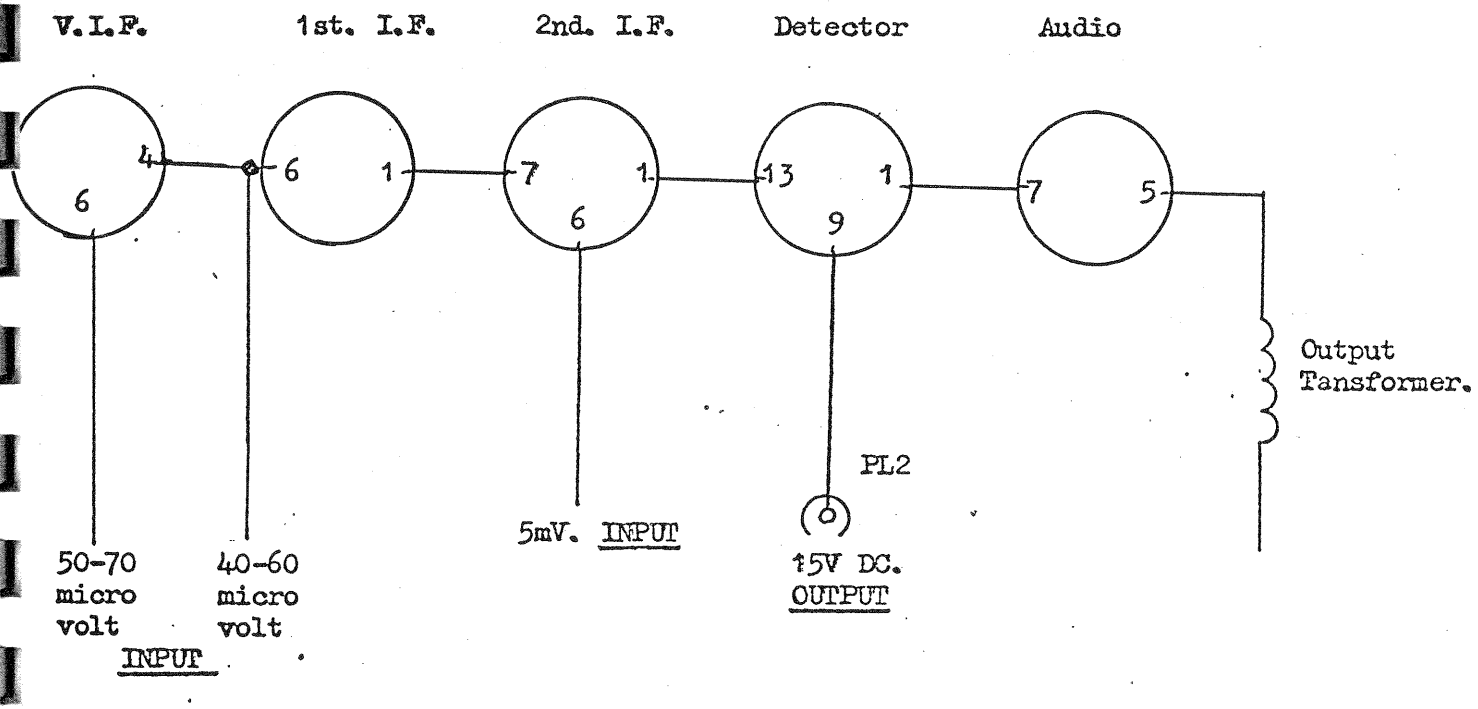

8.0 ALIGNMENT AND ADJUSTMENTS

Refer to drawing TP290/40 and TP290/41

8.1 IF alignment

Using signal generator set to 75ohm output impedance and adjusted to 500KHz, begin alignment by connecting the signal generator to pin 6 on the V.I.F. box. The setting of the receiver controls should be:

Power	ON
Function	MCW
Limiter	Single OFF
RF gain	Max.
Calibrator	OFF

The settings of other controls not mentioned is not critical.
Note:

The signal generator adjusted to 500KHz ±200Hz using a crystal oscillator or by frequency measurement.
This will ensure compatibility between receivers and F/S adaptors.

Meter the DC of the detector level at the IF output plug PL2 using the HP. VTVM. and working at a detector level of 15V by adjusting the signal generator input level. Trim each of the 500KHz tuned circuits for max. reading i.e. (L31 and L34 is V.I.F. box) (L38 and L39 is 1st. I.F. box) (L38 and L39 is 2nd. I.F. box) (L41 and L40 is Det. box).

The signal generator is set to produce 15V at this point.
Each IF will vary in sensitivity therefore no set level can be given.

8.2 Alignment of B.F.O.

Set the signal generator to 500KHz CW. using a crystal calibrator.
Connect the 75ohm output of the signal generator to pin 6 on the V.I.F. box.

Set function switch control to CW., limiter single OFF, calibrator OFF, RF gain and AF gain controls to maximum.

The tuning of the BFO is adjusted by means of L43 to give a zero beat note when the BFO trimmer is set to the centre of its range. (L43 is Det. box).

8.3 Adjustment of V.F.O. box

(While situated in the receiver)

This has not been issued as it has been found in practice that this adjustment is not necessary.

8.4 V.I.F. Aligment

(a) Connect signal generator to the aerial input terminal. Switch the receiver to band position 1 and monitor the detector level at the IF output plug PL2.

(b) The tuning of the low range (1.5 to 2.5MHz) of the V.I.F. is adjusted first, this adjustment is made at 1.55MHz and 2.45MHz.

(c) Set signal generator to 1.55MHz and tune the receiver to same frequency and adjust position of main tuning cores L30 and L32 V.I.F. to give max. detector level, refer to fig. TP290/40.

(d) Set signal generator to 2.45MHz and tune receiver to same frequency and adjust position of the cores of the series windings L30 and L32 to give max. detector level. (Ref. fig. TP290/41)

(e) Repeat adjustments (c) and (d) until correct.

(f) The tuning of the high range 2.5 to 3.5MHz is next adjusted. This is adjusted at 2.6MHz only.

(g) The signal generator is set to 2.6MHz and the receiver switched to band 2 and tuned to this frequency where the auxiliary coils L27 and L36 are adjusted for max. detector level. (Ref. fig. TP290/41)

(h) The tracking at the high end of the band can be checked by setting the signal generator to 3.4MHz and tuning the receiver to this frequency. No adjustment is provided at the high end of this V.I.F. band and adjustment can only be made by compromising the tracking of the low band.

8.4.1 If RX does not appear to be tracking correctly, the following procedure should be adopted.

(a) Set signal generator to 2 micro volt at 1.5MHz to aerial input.

(b) Switch RX to band 1 and set to 1.5MHz.

(c) Adjust L30 and L32, ref. fig. TP290/40 to max. level measured at output plug PL2.

(d) Set signal generator to 2.5MHz and tune to 2.5MHz on receiver band 1 and peak series cores L30 and L32 for max. level at PL2. (Ref. fig. TP290/41).

(e) Switch to band 2 and tune RX to 2.5MHz and peak L27 and L36 for max. output at PL2. (Ref. fig. TP290/41)

If tracking is still poor, slacken off grub screws at coupling 'A' and move coupling until tracking improves as indicated by more level response at PL2.

8.5 Crystal Oscillator Alignment

No further alignment of this unit is required, provided that satisfactory alignment was carried out during the preliminary alignment of this box. (See test spec. Appendix A).

8.6 RF and Antenna Circuit Alignment

(1) For this test the signal generator is set to give 2 micro volt of signal, modulated 30% at 400Hz. The 2 micro volt is the open-circuit signal generator voltage with a generator impedance of 75ohm which is used throughout this test. Using the Marconi TF867 generators a 20dB pad external to the generator is required to give 2 micro volt.

(2) A millivoltmeter GM6005 or similar is connected across the 600ohm audio output terminals.

(3) The HP. VTVM. is switched to DC 30V and the DC prod is connected to the IF output socket PL2 and used to measure the DC at the detector cathode. This DC level is not required for acceptance tests but does provide a valuable guide to the operator of the gain of the RF box.

(4) Each band should be checked in turn for gain and S/N ratio. (Ref. fig. TP290/40 for adjustment points).

Note:

The specification requirements are for a signal of 2 micro volt to provide a S and N/N ratio of at least 6dB and an audio output level of at least 10mW.

As a guide to what has been obtained on previous receivers the appropriate results are listed later in the text (table 6).

(5) A definite sequence must be used in checking or realigning any of the bands as the alignment of one band may affect others and should it be necessary to make any realignment, the table 5 at the end of this section gives the procedure for checking, tracking or alignment and also details the adjustment point i.e. L or C for alignment purposes.
It should be noted that when alignment in the separate test jig, a compromise is made between gain at centre of band and gain at extremes of each band before should any adjustment be made to the alignment of a band then it will be necessary to check the band, not only at the centre, but also at the extremities.

(6) The tsting procedure will be as follows:

(a) Switch RF box to the appropriate band commencing with the band listed at the top of table 5 which follows.

(b) Tune signal generator to centre frequency of band and tune RF box to this frequency.

(c) Note DC at detector level and audio at 600ohm output terminals. Switch off modulation and note noise level on meter connected to 600ohm output terminals and obtain S + N/N.

(d) Repeat at extremities of band.

(e) Repeat for other bands in table 5 in sequence.

(f) Realign any band that gives a poor performance, observing procedures detailed in table 5.

8.6.1 RF box

When adjusting the RF box it is necessary to know the position of mesh of the aerial trimmer plates. Remove coupling 'C' from trimmer shaft and move shaft until the slot in the shaft is vertical (trimmer is now at half mesh). Position the knob on the front panel so that the screw hole is either vertical or horizontal. Reconnect coupling 'C', with trimmer set thus, its position is known at all times.

TABLE 5

Procedure For Checking Tracking or Alignment

(See diagram TP290/40 and 41)

BAND	FREQ. RANGE MHz.	AERIAL CIRCUIT	RF CIRCUIT
22	22.5-23.5	trimmer C3 only	L23 and C71
29	29.5-30.5	trimmer C3 only	C9
24	24.5-25.5	trimmer C3 only	C73
17	17.5-18.5	trimmer C3 and L9	C177
18	18.5-19.5	trimmer C3 only	C67
19	19.5-20.5	trimmer C3 only	C68
20	20.5-21.5	trimmer C3 only	C69
21	21.5-22.5	trimmer C3 only	C70
23	23.5-24.5	trimmer C3 only	C72
25	25.5-26.5	trimmer C3 only	C74
26	26.5-27.5	trimmer C3 only	C75
27	27.5-28.5	trimmer C3 only	C76
28	28.5-29.5	trimmer C3 only	C58

BAND	FREQ. RANGE MHz.	AERIAL CIRCUIT	RF CIRCUIT
10	10.5-11.5	trimmer C3 only	L21 and C63
16	16.5-17.5	trimmer C3 only	L22 and C176
15	15.5-16.5	trimmer C3 only	C56
9	9.5-10.5	trimmer C3 and L7	C174
11	11.5-12.5	trimmer C3 only	C64
12	12.5-13.5	trimmer C3 only	C175
13	13.5-14.5	trimmer C3 only	C65
14	14.5-15.5	trimmer C3 only	C66
5	5.5-6.5	trimmer C3 and L5	L18 and C173
6	6.5-7.5	trimmer C3 and L12	L19
7	7.5-8.5	trimmer C3 and L13	L20
8	8.5-9.5	trimmer C3 only	C62
3	3.5-4.5	trimmer C3 and L3	L16 and C172
4	4.5-5.5	trimmer C3 and L11	L17
1	2.5-1.5	trimmer C3 and L1	No adjustment
2	3.5-2.5	trimmer C3 and L15	No adjustment

TABLE 6

Nominal Sensitivity and S + N/N Measurements(2 micro volt input)

BAND	FREQUENCY	INPUT	DC LEVEL	AUDIO OUTPUT	S + N/N
1	2.5MHz	2 micro-	27.5V	17.0dBm	9.0dB
	2.0MHz	volt	28.5V	17.5dBm	12.0dB
	1.5MHz		43.0V	17.5dBm	13.0dB
2	3.5MHz	2 micro-	24.0V	16.5dBm	11.5dB
	3.0MHz	volt	19.0V	15.5dBm	11.0dB
	2.5MHz		28.5V	17.0dBm	12.5dB
3	4.5MHz	2 micro-	10.5V	11.5dBm	7.5dB
	4.0 MHz	volt	19.0V	15.5dBm	9.0dB
	3.5MHz		40.0V	14.0dBm	9.0dB
4	5.5MHz	2 micro-	14.5V	13.0dBm	10.0dB
	5.0MHz	volt	18.0V	15.5dBm	11.0dB
	4.5MHz		36.0V	18.0dBm	9.5dB
5	6.5MHz	2 micro-	26.5V	17.0dBm	10.5dB
	6.0MHz	volt	29.0V	17.5dBm	10.5dB
	5.5MHz		26.5V	17.0dBm	10.0dB
6	7.5MHz	2 micro-	42.0V	18.0dBm	11.0dB
	7.0MHz	volt	39.0V	18.0dBm	10.5dB
	6.5MHz		38.0V	18.0dBm	11.0dB

TABLE 6

(continued)

BAND	FREQUENCY IN MHz.	INPUT IN micro volt	LEVEL IN DC VOLTS	AUDIO OUTPUT IN dBm.	S + N/N IN dB.
7	8.5	2	49.0	17.5	12.0
	8.0	2	44.0	17.5	12.0
	7.5	2	45.0	17.5	12.0
8	9.5	2	50.0	17.0	11.0
	9.0	2	48.0	17.5	12.5
	8.5	2	44.0	18.0	12.0
9	10.5	2	27.0	17.0	7.5
	10.0	2	26.5	17.0	8.0
	9.5	2	22.5	16.5	8.0
10	11.5	2	25.0	17.5	8.5
	11.0	2	25.0	17.5	8.5
	10.5	2	19.0	15.5	7.0
11	12.5	2	16.0	15.0	8.0
	12.0	2	21.5	16.5	8.5
	11.5	2	23.5	17.0	8.5
12	13.5	2	36.0	18.0	6.25
	13.0	2	32.0	18.0	7.0
	12.5	2	32.0	18.0	6.0
13	14.5	2	39.0	18.0	6.25
	14.0	2	36.0	18.0	6.25
	13.5	2	23.0	17.0	6.5
14	15.5	2	38.0	18.0	6.0
	15.0	2	36.0	18.0	6.25
	14.5	2	24.0	17.0	6.0
15	16.5	2	29.5	17.0	5.0
	16.0	2	36.0	17.5	5.0
	15.5	2	25.5	17.0	6.0
16	17.5	2	40.0	17.5	5.0
	17.0	2	23.0	16.5	5.25
	16.5	2	13.0	13.0	5.0
17	18.5	2	10.5	11.0	7.0
	18.0	2	10.5	10.5	6.5
	17.5	2	10.5	11.0	7.0

TABLE 6

(continued)

BAND	FREQUENCY IN MHz.	INPUT IN micro volt	LEVEL IN DC VOLTS	AUDIO OUTPUT IN dBm.	S + N/N IN dB.
18	19.5	2	15.0	14.0	7.5
	19.0	2	12.0	12.5	8.0
	18.5	2	12.5	12.5	7.5
19	20.5	2	16.0	15.0	8.0
	20.0	2	12.5	13.0	7.5
	19.5	2	11.5	12.0	7.5
20	21.5	2	14.5	13.0	8.5
	21.0	2	11.0	12.5	8.0
	20.5	2	12.0	13.0	8.0
21	22.5	2	12.5	14.0	8.0
	22.0	2	9.0	10.0	7.5
	21.5	2	10.5	12.0	8.0
22	23.5	2	15.0	15.5	8.5
	23.0	2	12.0	13.5	8.5
	22.5	2	11.5	13.5	8.0
23	24.5	2	17.5	16.5	8.5
	24.0	2	10.5	13.0	8.5
	23.5	2	8.0	10.0	8.0
24	25.5	2	17.0	16.0	8.5
	25.0	2	11.5	13.5	8.5
	24.5	2	10.5	13.0	8.5
25	26.5	2	15.5	15.0	7.5
	26.0	2	15.0	15.0	8.0
	25.5	2	11.5	13.5	8.0
26	27.5	2	15.5	15.0	7.5
	27.0	2	12.0	13.0	7.5
	26.5	2	10.0	11.5	7.0
27	28.5	2	13.5	14.0	7.0
	28.0	2	15.0	15.0	7.0
	27.5	2	11.5	13.0	7.0

TABLE 6

(continued)

BAND	FREQUENCY IN MHz.	INPUT IN micro volts	LEVEL IN DC VOLTS	AUDIO OUTPUT IN dBm.	S + N/N IN dB.
28	29.5	2	10.0	11.5	6.25
	29.0	2	11.5	13.0	6.5
	28.5	2	13.5	14.0	6.5
29	30.5	2	11.5	12.5	5.0
	30.0	2	13.5	14.0	6.0
	29.5	2	12.5	13.5	6.25

8.7 Dial Accuracy

With output of Calibrator at 100KHz. tune the RX to the beat at 2MHz. with fine tune at zero.
Slacken off grub screws on coupling 'B'and move coupling until zero beat is obtained.
Check for all calibration beats.

9.0 MECHANICAL REPAIR

9.1.1 Removal of the bottom plate

Remove 4 countersunk screws and cup washers from the front edge of the plate. Now unscrew two roundheaded screws from the centre and three from the back edge.
Now remove the cover plate.

9.1.2 Removal of the support bracket for chassis

Unscrew the two 2BA screws which pass through the flange of the support bracket into the two inch hexagonal pillars.

Now remove two 4BA and four 2BA screws from the bracket and remove it from the receiver.

The two hexagonal pillars can now be taken out with the aid of a 3/16 of an inch wide spanner.

Remove the 2BA screw which passes through the gear plate about half an inch above the filter potentiometer and one inch below the speaker.

9.1.3 RF Unit (5820-66-013-4179)

Unsolder the blue white aerial leads(white 16, blue 17).
Unsolder the blue lead (15) and blue lead (14).
Loosen the 2 grub screws on the aerial trimmer and push the shaft out with a screwdriver. Remove the 2 6BA screws from the shaft couplings.
Note the position for re-assembly.
Turn the receiver upsidedown.
Remove 2 hexagon 2BA screws from the front and 2 from the back.
Unscrew the crystal cover plate loca ted next to the RF unit.
Unsolder the green leads (5 to 13) and mark accordingly so as on re-assemmbly the same one is resoldered to its lug.
Dont overheat the ceramic feedthroughs.
Unsolder black shielded lead (1), red lead with blue marker (2), 0.1mF. capacitor lead and 2 brown leads (4).
The RF unit can now be lifted out from the top of the receiver.

9.1.4 Crystal Calibrator (5820-66-012-4171)

Remove the 5BA screw passing through the chassis frame.
Remove the blue lead which is coupled to the RF unit.
Tip upside down and using a 4BA spintight to remove 2 nuts, the leads can be removed.

(1) 2 red leads + white markers.
(2) 2 brown leads + red markers.
(3) 2 brown leads + red markers.
(4) 1 violet + red marker.
(5) 1 violet.
(6) Coaxial lead.

Turn the receiver back and pull the unit out.

9.1.5 I.F. Amplifier (5820-012-4170) 1st.

Remove the crystal cover by removing two 6BA screws.
Unscrew two 4BA hexagon pillars, removal of the end crystals will make this operation simpler.
The complete crystal assembly can be lifted out and placed on the RF box.
Remove the leads in order from the back beginning with the one nearest the RF unit.

(1) 1 blue lead.
(2) 2 brown leads + red markers.
(3) 2 brown leads.
(4) Red lead + brown marker.
(5) 2 grey leads + yellow marker on one only.
(6) Coaxial lead.
(7) Not used.

Then arrange leads as necessary to allow spintight to fit over the nuts and remove, be careful not to damage the lug on the back screw.
The unit will now fall out.

9.1.6 I.F. Amplifier - 2nd.

Remove the leads in order from the back as follows:

(7) Blue lead.
(6) Not used.
(5) Two grey leads.
(4) Red lead with green marker.
(3) Two brown leads.
(2) Two brown leads.
(1) Blue lead.

9.1.7 V.I.F. Unit (5820-66-012-4178)

Remove 6BA screws from half-shaft.
Take screw out from the tank, push away from the unit letting it remain on the arm.

Remove the two 4BA round headed screws.
One screw secures the solder lug earthing the two 4700pf heater bypass capacitors.

Unsolder leads marked:

(1) Red with a white marker.
(2) Two browns with red marker + capacitor lead.
(3) Two browns + capacitor lead.
(4) Two coaxial leads.
(5) Grey and yellow marker.

The braids of the two coax cables are joined and earthed on a pin on the unit.

(6) Shielded lead - remove the screw on the V.F.O. mounting.

This removes the cable clamp.
Unsolder the lead and then the braid.

(7) Remove the blue lead from the RF unit which is soldered to pin 7 of the V.I.F. unit. Now pull unit out from the bottom of the receiver. Be careful that the mounting feet do not foul on other wires etc.

9.1.8 Detector (5820-66-012-3452)

Loosen the two grub screws (not to far) from the top of the receiver. Now turn upside down, unsolder the leads.

(1) Black wire shielded (short lead).
(2) Brown wire + one capacitor lead (green).
(3) Brown wire + one capacitor.
(4) Red wire + yellow marker.
(5) Two violets.
(6) One resistor 4.7Kohm.
(7) One resistor 4.7Kohm.
(8) Orange.
(9) Black shielded lead (long lead).
(10) Red lead + white marker + 0.05mF capacitor.
(11) White lead.
(12) Blue + red marker.
(13) Blue lead on the side of the unit.

Remove 4BA nuts one secures the 0.05mF capacitor, the other a small tag strip, the unit will now drop out.

9.1.9 Audio unit (5820-66-012-4177)

Remove the screw from the half shaft from the top of receiver.
Turn upside down and remove the two 4BA round headed screws.
One secures the soldering earthing two leads, the other secures the two 0.01mF. heater bypass capacitors.

(1) 1 blue lead.
(2) 2 browns + red markers + .01mF. capacitor.
(3) 2 browns + .01mF. capacitor.
(4) 1 red lead.
(5) 2 violets leads.
(6) 1 whit lead.
(7) 2 black leads shielded.
(8) 2 whit leads.
(9) 1 green lead.
(10) 1 red + white marker.
(11) 1 grey lead.
(12) 1 green + red marker.
(13) 1 orange + red marker.
(14) 1 orange + green marker.
(15) 1 red + brown marker.
(16) 2 red + blue markers.

Turn over, remove 2 covers and valves.
With a long thin bladed screwdriver remove the round headed screw in the anodised aluminium plate opposite and between the valves.
Pull the unit out from the top of the receiver.

9.1.10 Power Transformer

Remove the two 5BA screws clamping the 2 micro farad 200V capacitor in place and move unit out of the way.
Remove nut supporting the globe holder bracket and move out of the way.
Undo the clip securing the 24mF. 300VW capacitor.
Remove the four 2BA screws and shakeproof washers, flat washers and bakelite insulating washers.

Unsolder the leads and remove the transformer from the top of the receiver.

9.1.11 Hash Filter

This in vibrator circuit can be removed by undoing the two 6BA screws and unsoldering the appropriate wiring.

The HT. filter choke, immediately beneath the crystal calibrator unit, is removed by undoing two 4BA screws and unsoldering a red lead and a red lead with a violet marker.

9.1.12 The Bias Rectifier (Selenium)

This is removed by undoing the nut on the mounting bolt and unsoldering the two pink and one violet leads.

9.1.13 V.F.O. Unit (5820-66-012-9040)

Remove flexible control from detector and pull out as far as it will go.
Remove round head 4BA screws from the mounting plate.
One holds a cable clamp.

Undo the 6BA screw from the half shaft coupling.
Unsolder the following leads:

(1) Black shielded lead.
(2) 1 red lead + yellow marker + mica capacitor.
(3) 1 brown lead.
(4) 1 brown lead.
(5) 2 black leads.

Undo the two 6BA nuts from the filter assembly.
The filter assembly can be taken away and also take away the bakelite insulator from underneath.
Remove the cover and valve to allow more manoeuvrability.
The unit will pull out from the bottom.
The unit will fall or pulled out and the two mounting feet may foul on the dial lamp securing nut.
This may be overcome by twisting with a screwdriver.

The V.F.O. unit can be separated by unsoldering the green and black earth leads and loosening the nut.

9.2 REMOVAL OF THE FRONT PANEL AND CONTROLS

9.2.1 Removal of the case

Unscrew the two nuts holding the handle-support stand and remove the two 2BA screws. The left hand screw is two inches long, the right one is $1\frac{3}{4}$ inch long. When re-assembling, make sure these screws are replaced in their correct positions.

Unscew all other 2BA screws from around the front panel.
Note that all are identical except for one which is $\frac{3}{4}$ inch long and must be replaced correctly.
This screw is immediatly on yhe right of the $1\frac{1}{4}$ inch support bracket screw, the case can now be removed.

The two rack mounting plates, secured by $\frac{1}{4}$ inch B.S.F. cheesehead screws may be removed for easier handling of the receiver.
No other useful purpose can be gained by their removal.

9.2.2 Removal of the controls (fig. 1)

Refer to the control and connecting point diagram for the R5223 receiver.

(a) Filter Control Knob - 1

Unscrew the 6BA steel screw which secures the knob to the shaft and push out the screw with the bent wire tool.
(see fig. 9-1). The knob can now be removed.

(b) Dial Lamp - 5

Unscrew the dial lamp plug with a coin and remove the globe.
The plug can now be screwed back into position.

(c) Metering Control Knob - 7

Repeat as in 9.2(a).
This knob is marked with a white spot and must be repleased accordingly.

(d) Calibration OFF-ONN Knob Control - 12

Repeat as in 9.2(a).

(e) Lighting OFF-ONN Control Knob-13

Repeat as in 9.2(a).

(f) Aerial Trimmer Control Knob-14

Repeat as in 9.2(a).

(g) Band Switch Control Knob-16

Slacken the domed headed nut with a wide bladed screwdriver and tap the nut firmly with the handle of the screwdriver.
The knob, complete with the domed nut can now be pulled off the shaft.

(h) R.F. Gain Control Knob-17

Repeat as in 9.2(a).

(i) Tuning Control Knob-19

Repeat as in 9.2(a).

Remove the spring washer.
Turn the lock knob to the unlock position, and remove the slot headed stud. Now remove the chromium plated locking fork, unscrew the flanged bush and take it from the shaft.

(j) B.F.O. - L.T.R. Control Knobs-22 & 21

Remove the B.F.O. knob as in 9.2(a).

The winged L.T.R. knob remains on the front panel.

(k) Audio Gain - Function Control - 24 & 23

Repeat as in (j).

(l) Power ON-OFF Control Knob - 26

Repeat as in 9.2 (a).

9.2.3 Removal of Miscellaneous Components

(a) Unscrew three 2BA screws (nearest the front panel) from each side of the chassis frame.
When re-assembling, be sure to connect the earth leads secured by the screws.

(b) Unsolder the 1000pf. mica capacitor on the AC fuse, 20, from the earth lug and the wires connected to the fuse holders (18, 20).
Unsolder the cable from the IF socket, 15 and the wires from the meter (10).

9.2.4 Separation of front panel from chassis

Slacken the bush nuts on the front panel.
Do not remove these nuts (fig.4 Nos. 26, 23, 24, 1, 3, 21, 22, 19, 11, 17, 13, 16, 15, 14, 12, 7, and 8.

Now lift the front panel squarely from the chassis.
It cannot be removed completely because of the wires on the power connector (25), the carousel (28), the phone DIV. mute plug (29) and the loudspeaker.
Unsolder the speaker wires to allow the front panel to swing out.

9.2.5 Complete Removal of the Front Panel

Complete removal is only necessary if the gear plate has to be removed.
Unsolder the wires on the power connector (25), the carousel (28) and the phone DIV. mute plug (29).
Front panel is now free.

9.2.6 Removal of the Gear Plate (Drawing No.TP290/42)

Remove the ceramic wafer switch and the meter rectifier by unscrewing the three nuts. Unsolder the two position wafer dial light switch leads.

Top - brown + yellow marker.
Centre - brown + white marker.
Bottom - brown.

Push the globe holder from behind to enable the globe to be unscrewed.
Now push the empty globe holder out from the front to the back.
Unsolder the wires from the power ON, speaker OFF switch (26).

Top - White.
Centre- Black.
Bottom- Grey.

Unsolder the wires from the toggle switch beginning from the outer lug.

Black + Red marker.
Black + Whit marker.
Red.
Red + Green marker.

Unscrew three 2BA screws from each side of the gear plate.
Remove the V.F.O., V.I.F. and audio units (see section 9).
Remove the wires from the function switch as shown in the diagram.
(ceramic wafer)

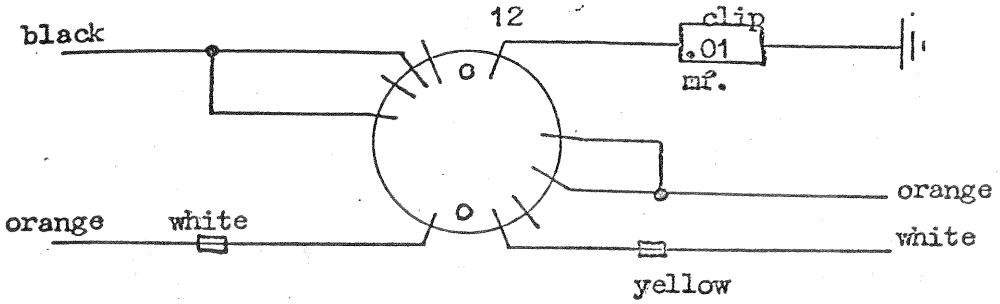

FUNCTION SWITCH Fig. 9.2.

Unsolder the two orange leads from the filter potentiometer.

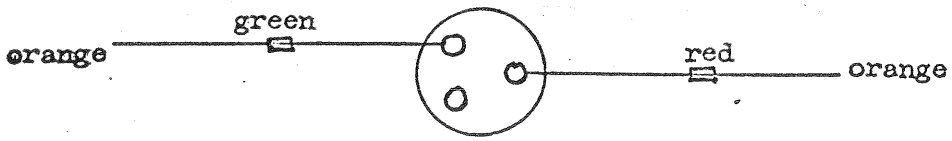

FILTER POTENTIOMETER (BACK VIEW) Fig. 9.3.

Unsolder the leads from the audio gain potentiometer.

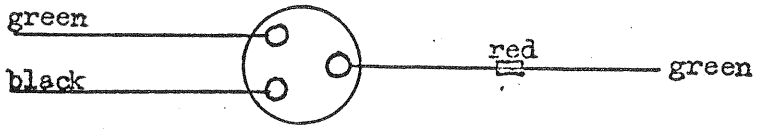

AUDIO GAIN POTENTIOMETER (BACK VIEW) Fig. 9.4.

Unsolder the leads from thr RF gain potentiometer.

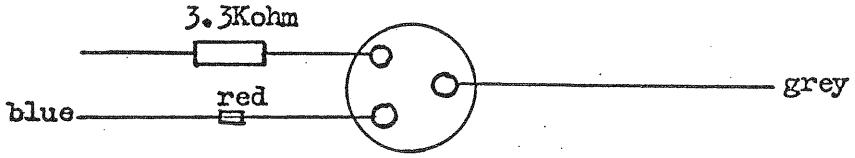

RF. GAIN POTENTIOMETER (BACK VIEW) Fig. 9.5.

Unsolder the wire from the calibrate ONN-OFF switch.

Unsolder the wires from the matching transformer as shown in the diagram. (Fig. 9.6.).

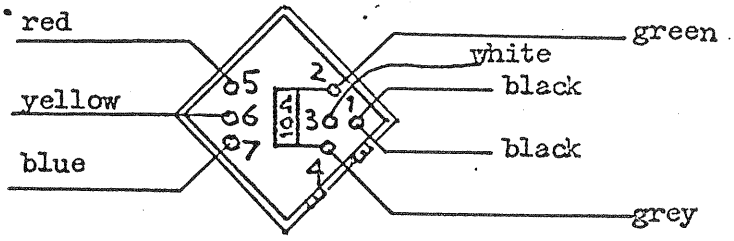

MATCHING TRANSFORMER (TOP VIEW Fig. 9.6.)

Remove the dial lamp assembly, the gear plate is now free.

9.2.7 Gear Plate Assembly (Ref. Diagram TP290/42)

(a) Remove circular vernier dial (6625-66-012-6553) by removing 3, 8BA screws.

(b) Remove dial cam (5820-66-012-6168) by unscrewing the securing 8BA screw. When re-assembling, position the cam as shown in diagram with the dial fully anti-clockwise.

(c) Remove finger cam (5820-66-012-4164) by unscrewing the 6BA screw and pulling from the shaft.

(d) Now remove the spring.

(e) Unscrew the screw from the dial stop bracket and remove.

(f) Unscrew the 2 supporting screws and remove the wafer switch.

(g) Undo the dial wire from the spring.

(h) Remove the dial escutcheon bracket by undoing the 2 screws.

(i) Now push the dial runner against its spring and remove. The dial curser and dial wire can now be taken off the dial runner.

(j) Remove the cog from the ceramic wafer switch and then remove the switch.

(k) Remove the dial drum by undoing the securing screw.

(BACK VIEW FACING UP)

(l) Remove the 'T' shaped pressure plate by undoing the screw and remove it and the spacer.

(m) Remove the small dial drum from underneath.

(n) Remove bush (5820-66-012-4134) by removing its 6BA screw.

(o) Now take of the metal bracket (5820-66-012-4152) and spring washer.

(p) Unscrew and lift off the cog (5820-66-012-4127).

(q) Unsrew and remove cog wheel (5820-66-013-2035). Undo the nut at (a) and push the arm away from the large cogged wheel. Now remove the 5 support screws from the large bracket and pull the bracket with cog wheels attached away from the main plate.

(s) Loosen the grub screws on cog wheel (5305-66-012-5954) and (5820-66-012-6167) and remove, the shaft will slip out in the opposite direction.

(t) The large cogged wheel (5820-66-012-4124) will now come out. Pull out the small cog (5820-66-012-4166).

(u) Cog wheel (5820-66-012-5165) can be pulled out from the double cog wheel.

(v) Loosen the grub screws on the central two inch shaft bracket (5820-66-012-4142) and remove.
Loosen the grub screws between the two wheels on the double cog wheel (5305-66-012-5954) (5820-66-012-6166) and pull it away from the shaft, tap if necessary, now remove the shaft.

(w) Remove the half shaft (5820-66-012-4142) by loosening two grub screws. Now loosen the grub screws on the cog wheel (5305-66-012-5954), (5820-66-012-6167) and remove by pulling away from the shaft. Now remove the shaft.

(x) The 50Kohm potentiometer is removed by unscrewing the potentiometer nut.

(y) The dial lamp socket is removed by undoing the two nuts.

(z) The plate is now completely stripped, all remaining components are rivetted.

From the main gear plate.

(1) Remove cog wheel (5820-66-012-5165).

(2) To remove cog (AA) firstly unscrew from the chassis and then remove circlip from hexagon spacer.

(3) Remove cog (BB) by unscrewing half shaft, now pull the cog out from the top, undo the screw and the cog will pull away from the shaft.

(4) To remove ON-OFF toggle switch central shaft, undo spring remove circlip from under the chassis and pull out the shaft.

(5) The toggle switch can be taken out by unscrewing the nut from the bracket.

(6) The 500Kohm potentiometer is removed by unscrewing the potentiometer nut.

(7) Remove cog (CC) by unscrewing from the under-chassis and then removing the circlip from the hexagon spacer.

(8) Remove the dial control shaft (5820-66-012-4163) by loosening the grub screws in the cog (5820-66-013-0136) and pulling apart.

(9) Remove shaft (5820-66-012-4126).

(10) Remove spring lever by unscrewing nut from top of the chassis and releasing spring.

(11) Remove 2nd spring lever as in (10) above (lighter spring, lower lever).

(12) undo screw from shaft (5820-66-012-4128) and pull away the clover shaped bracket and pull out shaft from the other side.

9.3 Soldering Technique

When removing and replacing sub-assemblies, the interconnecting leads should be soldered with 60% tin alloy solder with 3% silver content. Very hot soldering irons should not be used, particularly on the assembly feed through posts as the internal connectors may lift off creating an open circuit or dry joint.

To open sub- assemblies, first scrape away paint from surface areas to be unsoldered, then using a 300W soldering iron with a wedged shaped bit apply heat to the joint area of the side panel to be removed.
When solder has softened insert a thin bladed knife between the two sweated surfaces and work both the iron and the knife gradually along the joining seams until the panel to be removed is free from adhesion, then remove panel.
Wipe away any solder globules formed with a dry cloth whilst solder is still in the plastic state. To resolder panels, clean both surfaces of excess solder; apply soldering iron to the joining surfaces, exert light pressure at the same time, move iron gradually along the seams so as to provide a uniform sweated joint between the two surfaces.
Wipe away any excess solder whilst in the plastic state.
Clean, prime and paint the assembly as appropriate.

9.4 Sub-Assembly Panel Removal

9.4.1 IF Unit

Both side panels can be unsoldered to reveal components.

9.4.2 Audio Unit

Unsolder panel on rear of unit, remove brackets and pot. nuts.

9.4.3 V.F.O. Unit (small)

Unsolder side panel furthest away from alignment screws.

9.4.4 V.F.O. Unit (large)

Unsolder front and back panels of the unit, remove brackets and pot. nuts.

9.4.5 V.I.F. Unit

Unsolder front and back panels of the unit, remove brackets and pot. nuts.

9.4.6 Crystal Calibrator Unit

Unsolder the small panel by the feed through terminals and the large side panel opposite, which contains a threaded projection for a mounting screw.

9.4.7 Detector Unit

Unsolder the small front panel and larger back panel.

9.4.8 RF Unit

Unscrew both side panels and top panel, unsolder the bottom panel.

R5223 RECEIVER.

The following points are to assist repair personnel in the event of low output or complete failure of the receiver.

(I) Check the alignment of the 500 Kc/s I.F. tuned circuits.

This should be done in accordance with SPA 12073 Sheet 10, and when carried out, the following sensitivities should apply to obtain 15V D.C. at plug PL. 2.

60mV at pin 6 of the VIF unit
60-80μV at pin 6 of the 1st IF unit
5mV at pin 6 of the 2nd IF unit - V7 removed
44V at pin 13 of the detector box - V7 removed.

These figures must be obtained before proceeding to the VIF stage. If these figures cannot be obtained the box to which the lack of sensitivity is traced must be regarded as suspect, and should be either repaired or replaced.

(II) Check the VIF unit performance.

In this check only the non-converting bands are used i.e. band 1 & 2.
Set the band switch to BAND 1 and apply a 2mV signal to the aerial terminals at 1.5, 2.0 and 2.5 Mc/s in turn and check that 26-30V DC is obtained at PL 2 for each of these frequencies. Adjust C3, the aerial trimmer, at each frequency for maximum voltage.
Band 2 should be checked in a similar manner. If the tracking is satisfactory, the DC voltage at PL 2 will agree fairly closely for the width of each band.
It should be noted that although the V.I.F. is prealigned in the factory, when installed in a receiver adjustments as outlined in appendix SPA 12073 are often necessary to achieve correct tracking and output. This has proved to be an important stage and there is no point in proceeding to the converting bands until both bands 1 and 2 are providing sufficient output and correct tracking. Failure to achieve the 26-30V DC at PL 2 at this stage of testing can usually be attributed to

(a) The aerial stage (L1, L2, C5, C11, L15 or switching)
(b) R.F. Valve section
(c) Mixer valve section
(d) VIF Band Pass switching, component failure etc.
(e) Poor VIF alignment - See Appendix C SPA 12073
(f) Poor VFO alignment - See below.

(III) Faults in the VFO Unit.

Faults likely here are (a) low output and (b) incorrect tracking.

(a) Rarely occurs, and cannot be expected, but a valve check will eliminate doubts.
(b) During production the VFO is aligned in a special jig, and practice has shown that no adjustment of coils L28, L29 and L33 of this unit is necessary when installed in a receiver. Tracking and output have always been satisfactory.

However, it is always necessary to check the mechanical alignment of the VFO with respect to the gear train. This can be done by setting the dial accurately on, say, 2.5 Mc/s, switching on the crystal calibrator, and after loosening the VFO coupling screws, adjusting the VFO shaft in relation to the gear train until the speaker indicates zero beat. Retighten the screws.

The Converting Bands can now be tested for audio output and S/N ratio.

(IV) R.F. Unit failures.

(a) Low Oscillator Output.
- Check oscillator alignment as described in SPA 11771 Sheet 3.

(b) Incorrect alignment of Aerial and RF Stages.
- Follow procedure outlined in SPA 11771.

(c) Switch breakdown.
- When all the previously mentioned items appear to be in good order and the trouble still exists, due consideration must be given to the switch. The achieving of good S/N ratios and output figures is very dependent upon all the switch contacts being in good order and clean.

(d) General Note.

It should be noted that several bands have common coils and crystals etc, and a study of the performance of a group of bands, together with a process of elimination, can sometimes pinpoint a faulty coil, capacitor, or crystal in the R.F. unit.

10.0 SEAL TEST AND DRYING PROCEDURE

10.1 Seal Test

A suitable seal test can be carried out by using a hand pump (with suitable connecting adaptor).

Pressurise to 5 lbs. Leakage rate should be no greater than 10% after one hour.

Note:

The air used for the above test should be passed through a drying machine if possible.

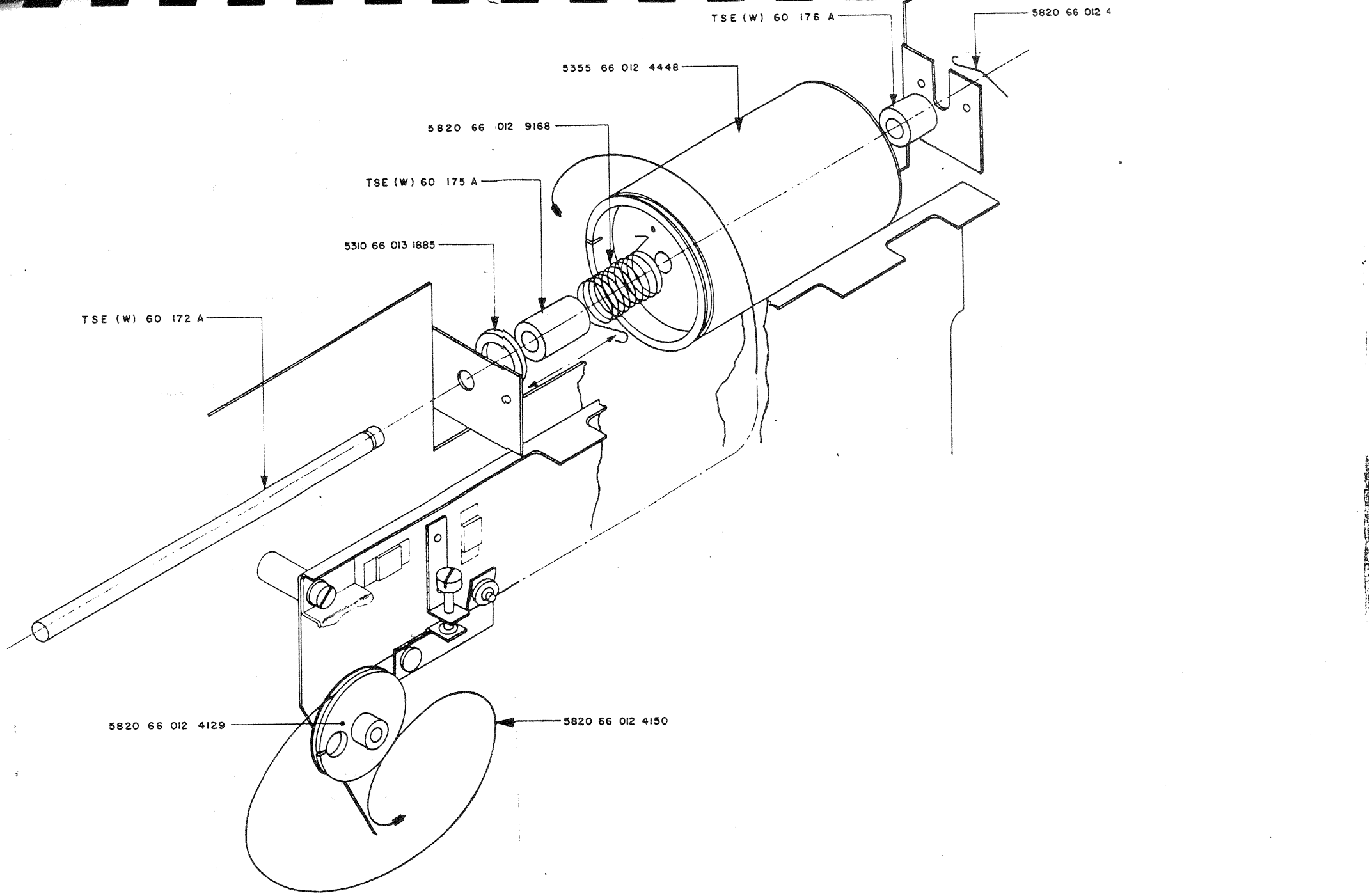
TSE (W) 60 176 A
5820 66 012 4
5355 66 012 4448
5820 66 012 9168
TSE (W) 60 175 A
5310 66 013 1885
TSE (W) 60 172 A
5820 66 012 4129
5820 66 012 4150

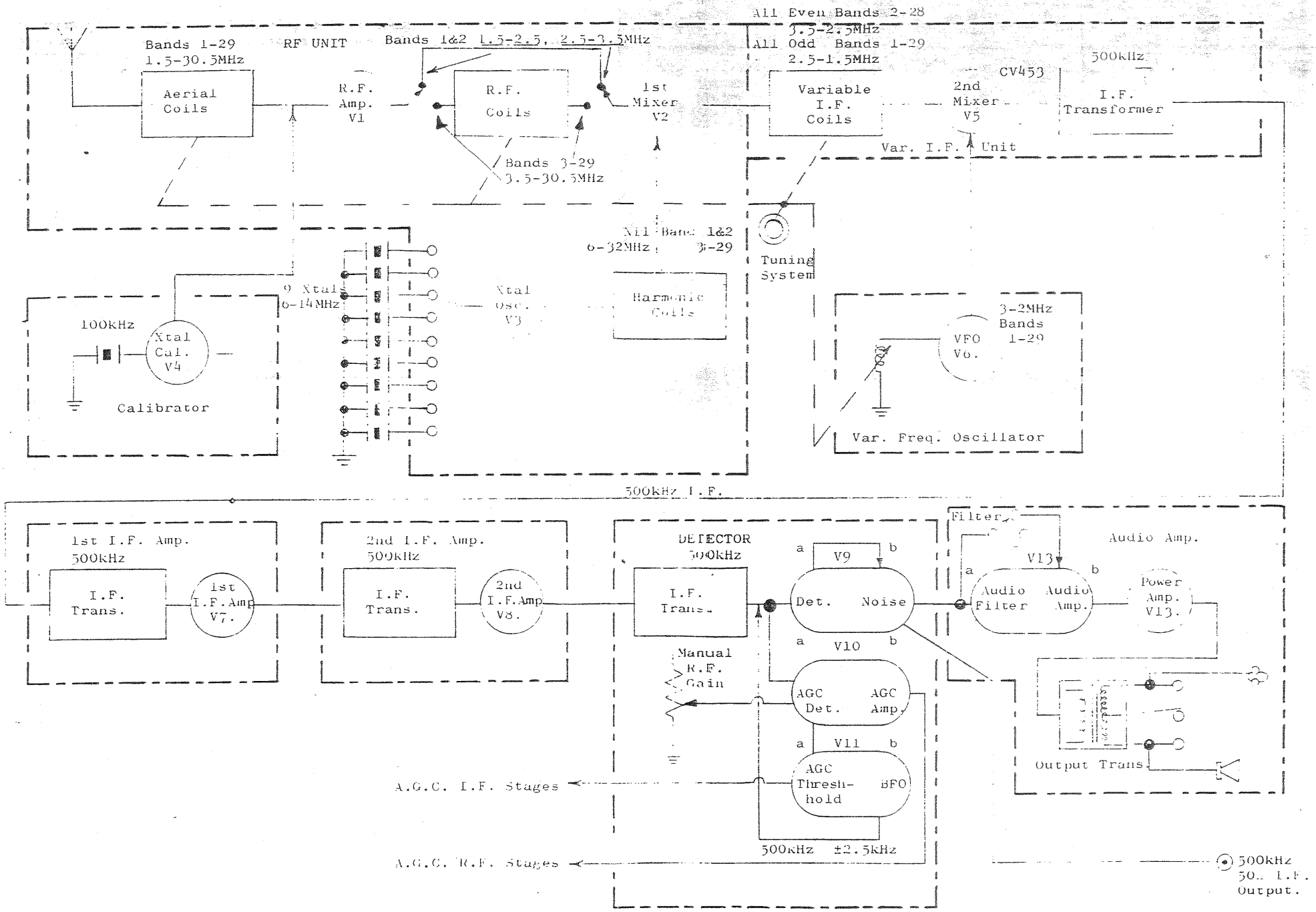

FIG. 4b RECEIVER R5223 SIGNAL PATH BLOCK DIAGRAM

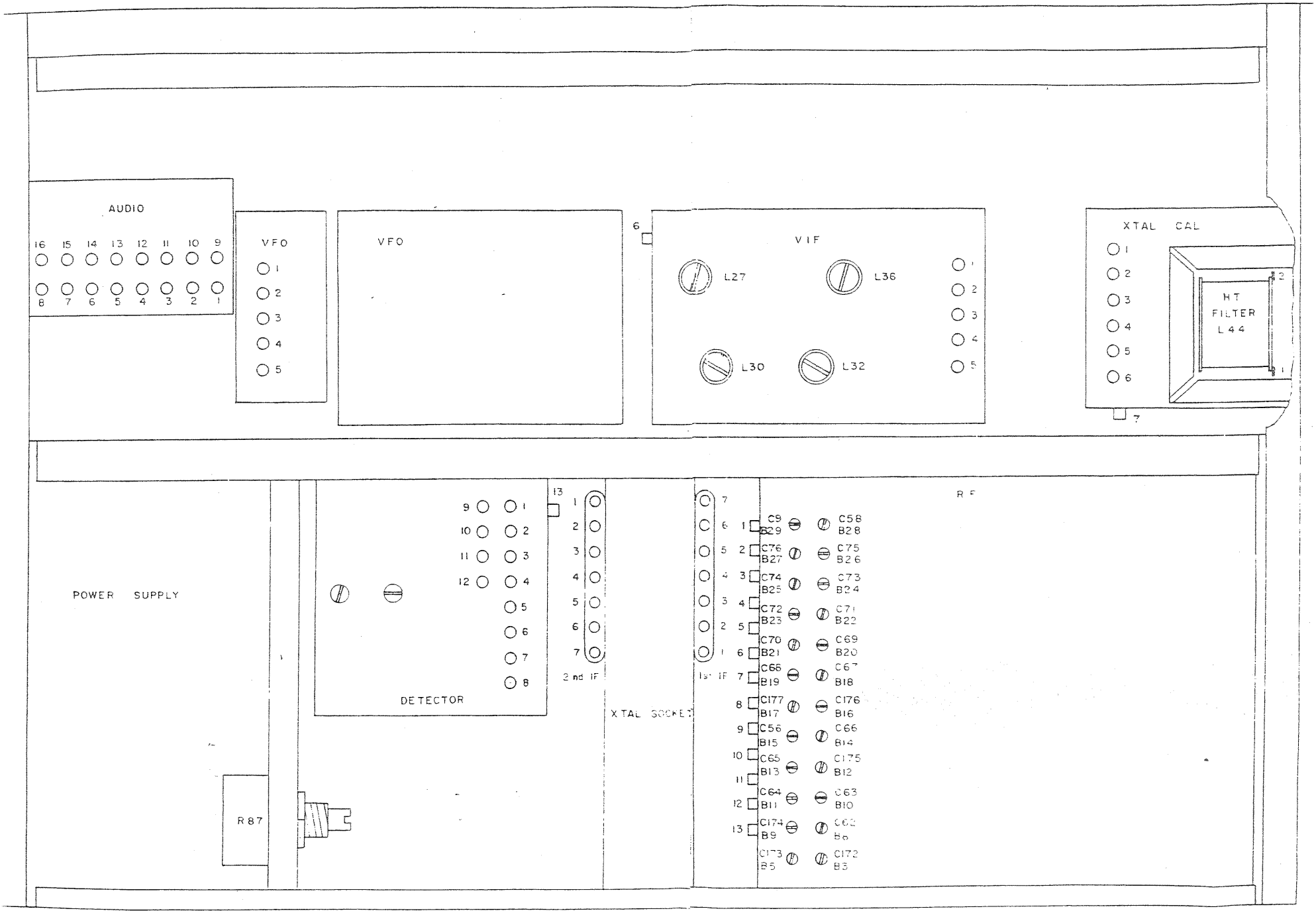
AUDIO
16 15 14 13 12 11 10 9
8 7 6 5 4 3 2 1
VFO
1
2
3
4
5
VFO
6
VIF
L27
L36
L30
L32
1
2
3
4
5
XTAL CAL
1
2
3
4
5
6
2
HT
FILTER
L44
1
7
POWER SUPPLY
R87
9 1
10 2
11 3
12 4
5
6
7
8
DETECTOR
13
1
2
3
4
5
6
7
2 nd IF
XTAL SOCKET
7
6 1
5 2
4 3
3 4
2 5
1 6
1st IF 7
8
9
10
11
12
13
C9 B29
C58 B28
C76 B27
C75 B26
C74 B25
C73 B24
C72 B23
C71 B22
C70 B21
C69 B20
C66 B19
C67 B18
C177 B17
C176 B16
C56 B15
C66 B14
C65 B13
C175 B12
C64 B11
C63 B10
C174 B9
C62 B8
C173 B5
C172 B3
R F

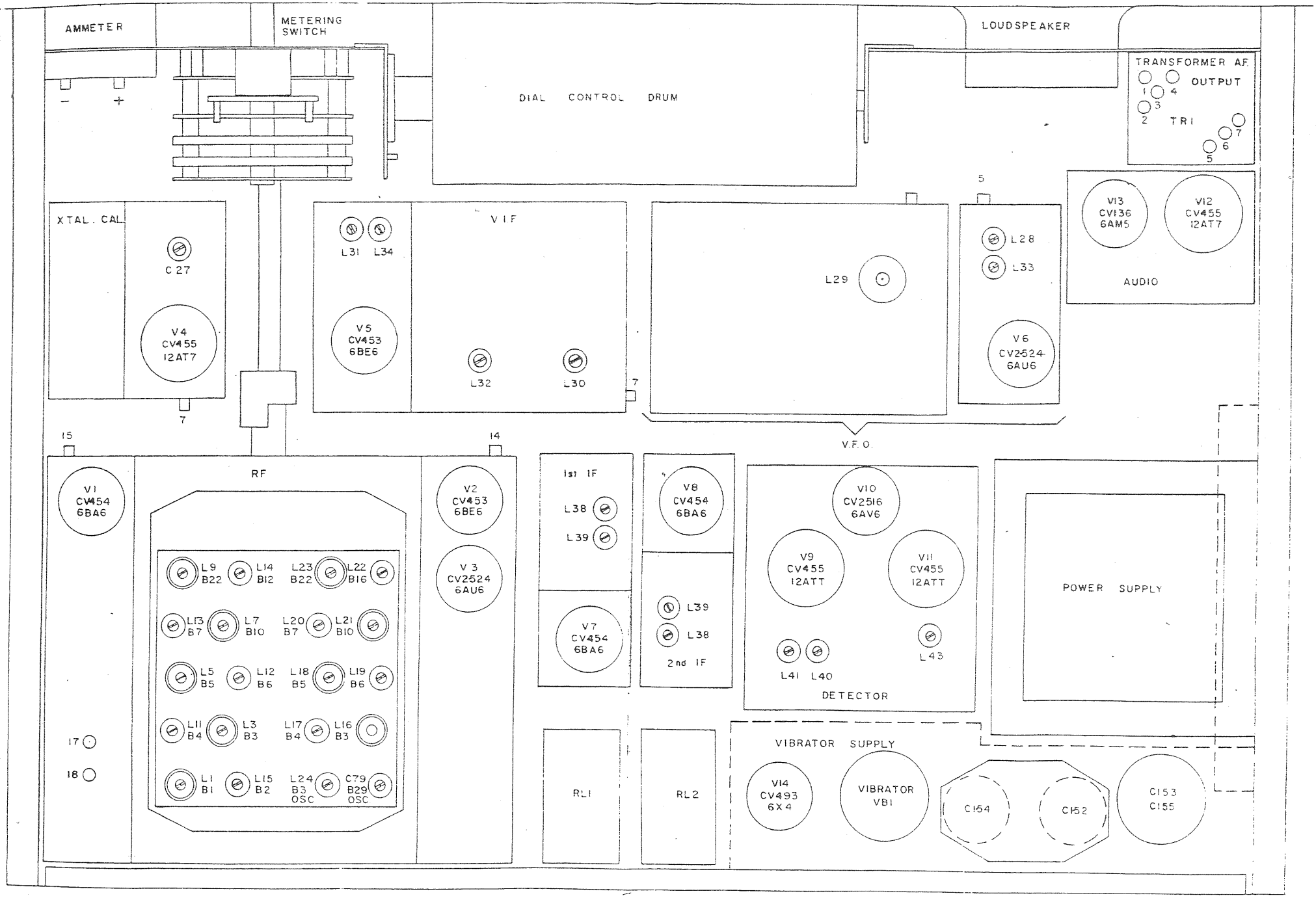
AMMETER
METERING SWITCH
DIAL CONTROL DRUM
LOUDSPEAKER
TRANSFORMER AF
OUTPUT
TRI
XTAL. CAL
C 27
V4 CV455 12AT7
V I F
L31 L34
V5 CV453 6BE6
L32
L30
L29
L28
L33
V6 CV2524 6AU6
V13 CV136 6AM5
V12 CV455 12AT7
AUDIO
V.F.O.
RF
V1 CV454 6BA6
V2 CV453 6BE6
V3 CV2524 6AU6
L9 B22
L14 B12
L23 B22
L22 B16
L13 B7
L7 B10
L20 B7
L21 B10
L5 B5
L12 B6
L18 B5
L19 B6
L11 B4
L3 B3
L17 B4
L16 B3
L1 B1
L15 B2
L24 B3 OSC
C79 B29 OSC
1st IF
L38
L39
V7 CV454 6BA6
V8 CV454 6BA6
L39
L38
2nd IF
V10 CV2516 6AV6
V9 CV455 12ATT
V11 CV455 12ATT
L43
L41 L40
DETECTOR
POWER SUPPLY
VIBRATOR SUPPLY
V14 CV493 6X4
VIBRATOR VB1
C154
C152
C153 C155
RL1
RL2

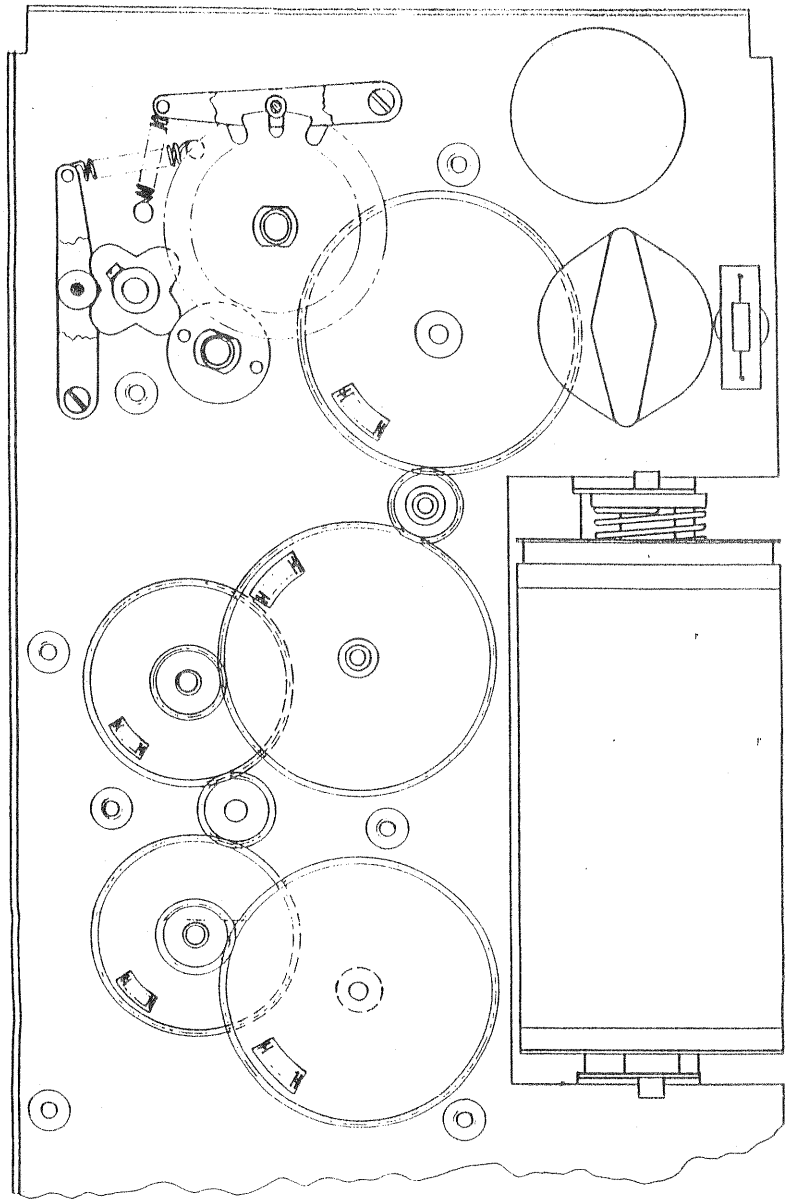

REAR VIEW WITH REAR PLATE REMOVED

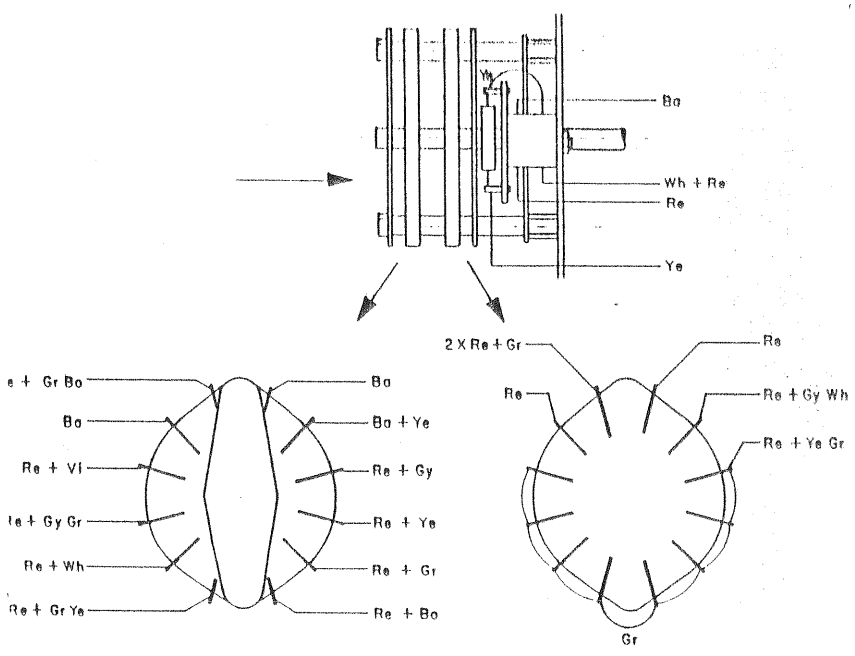

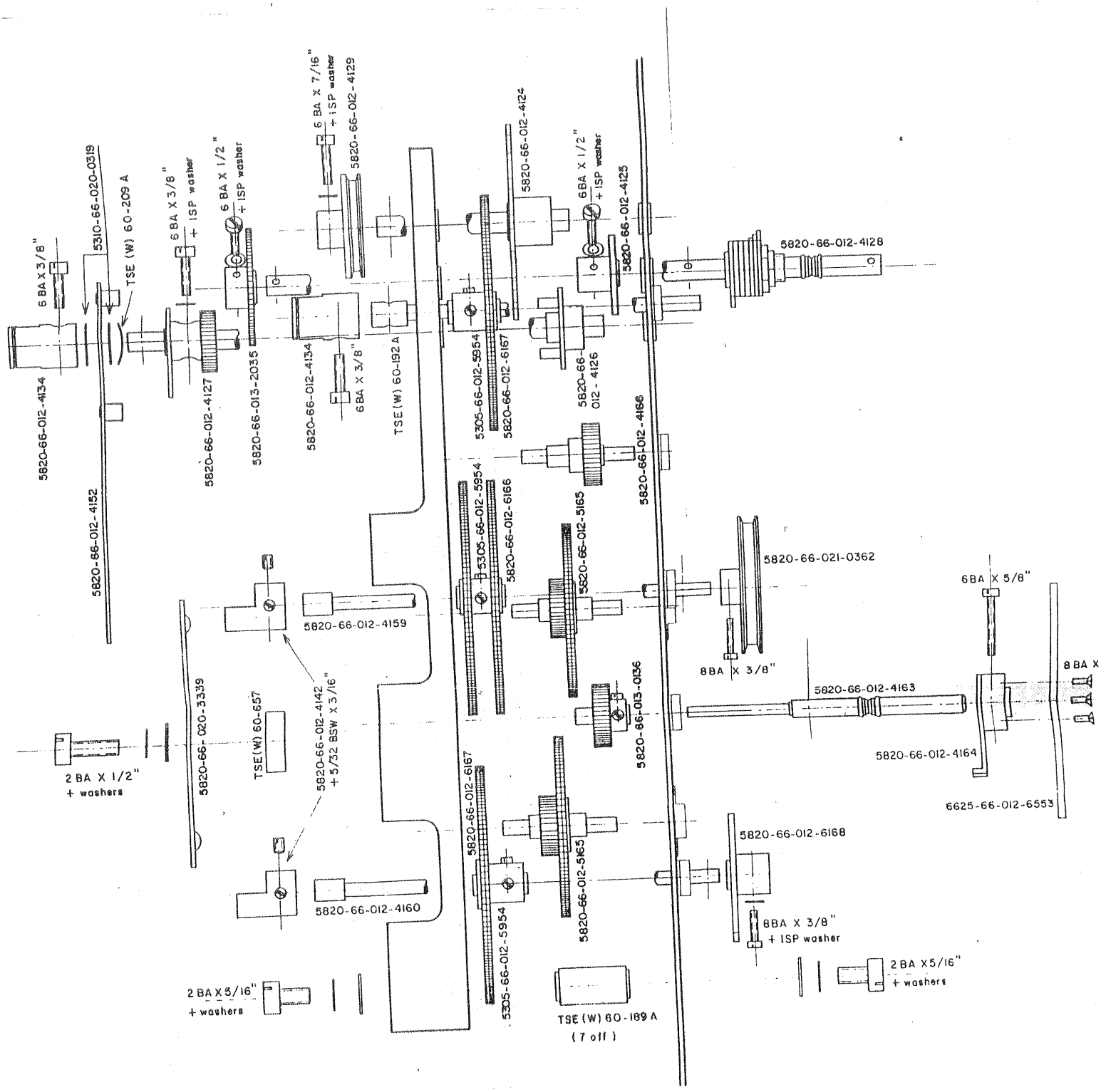

EXPLODED TOP VIEW

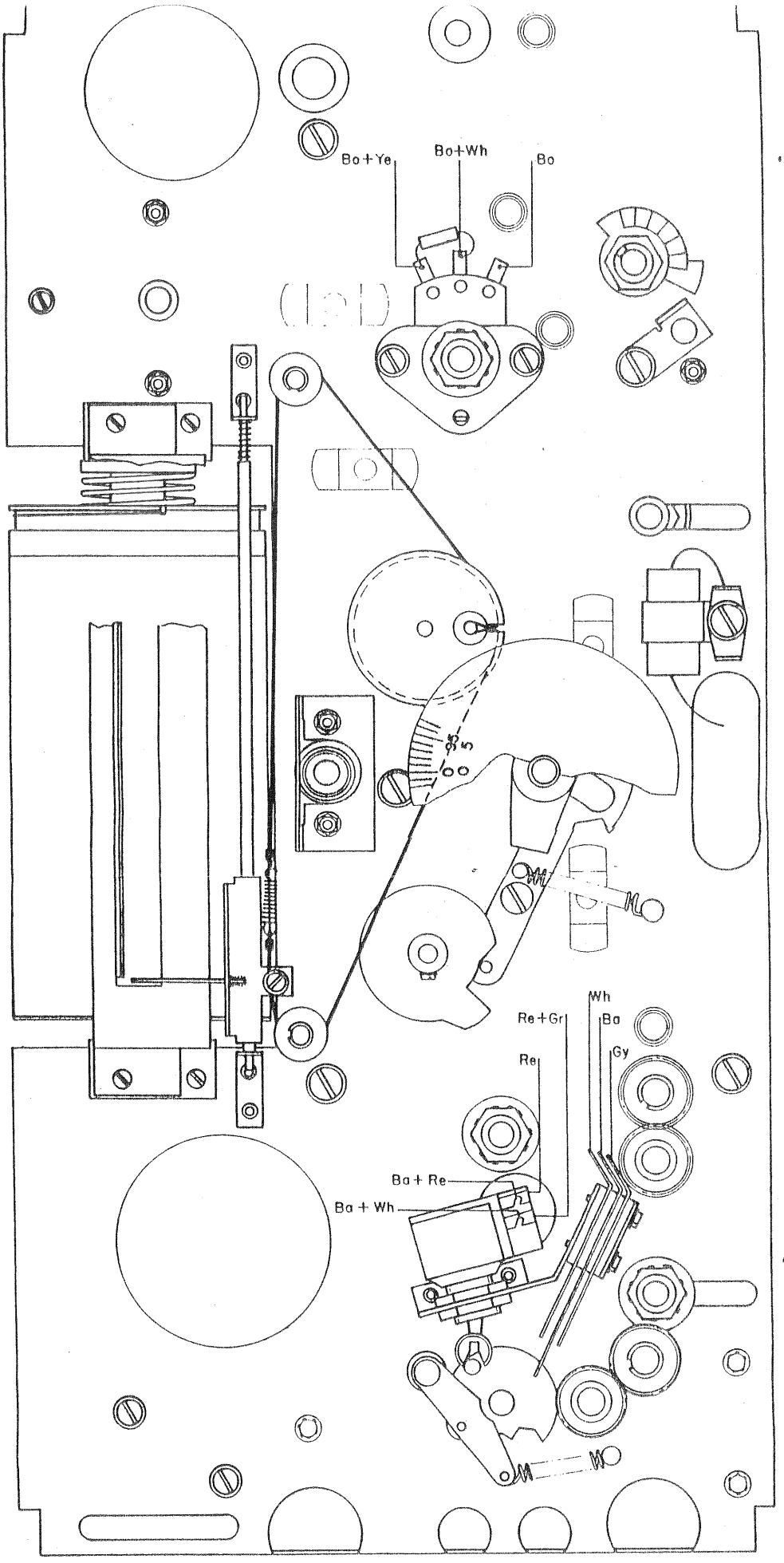

FRONT VIEW

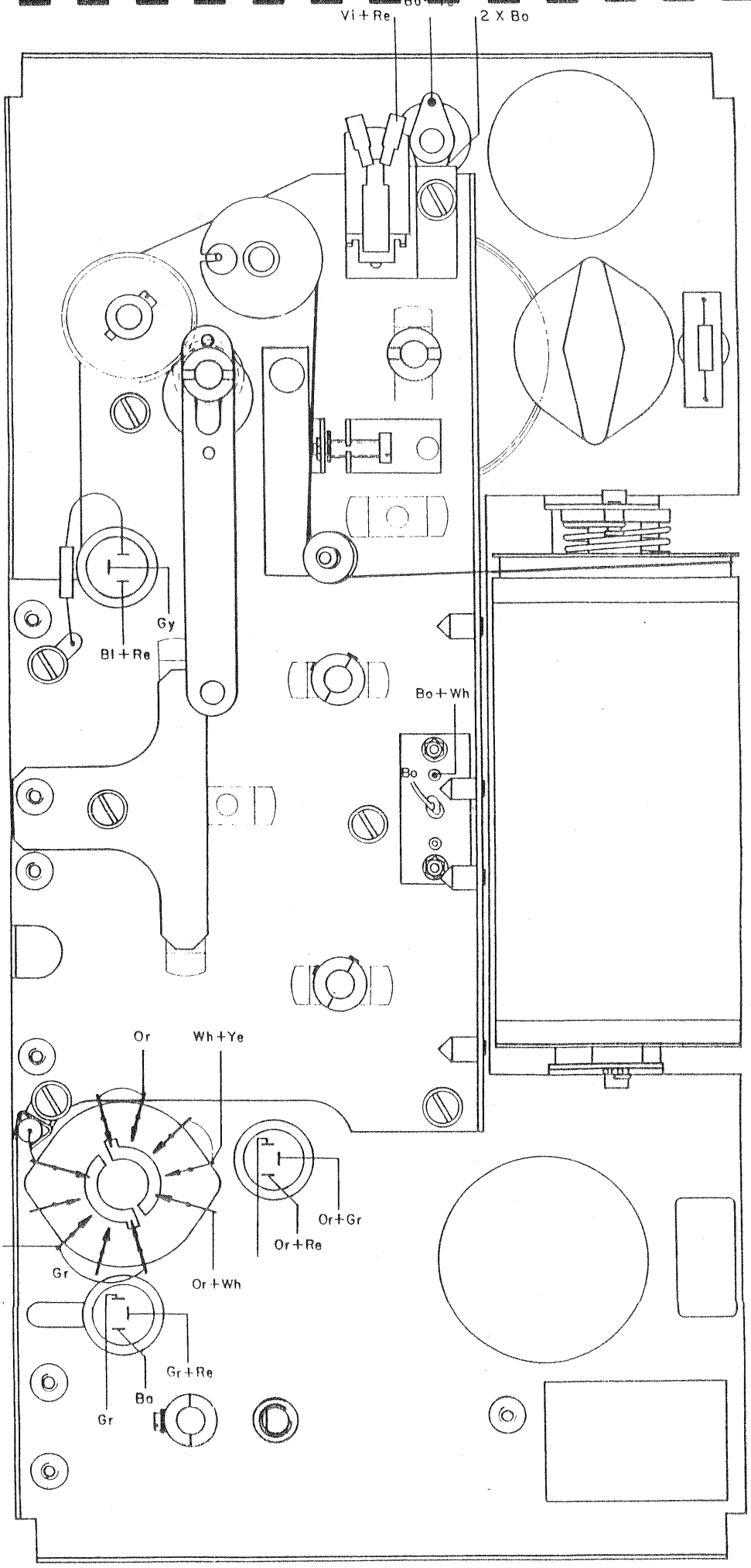
Vi + Re
Bo
2 X Bo
Gy
Bl + Re
Bo + Wh
Bo
Or
Wh + Ye
Or + Gr
Or + Re
Gr
Or + Wh
Gr + Re
Bo
Gr

REAR VIEW

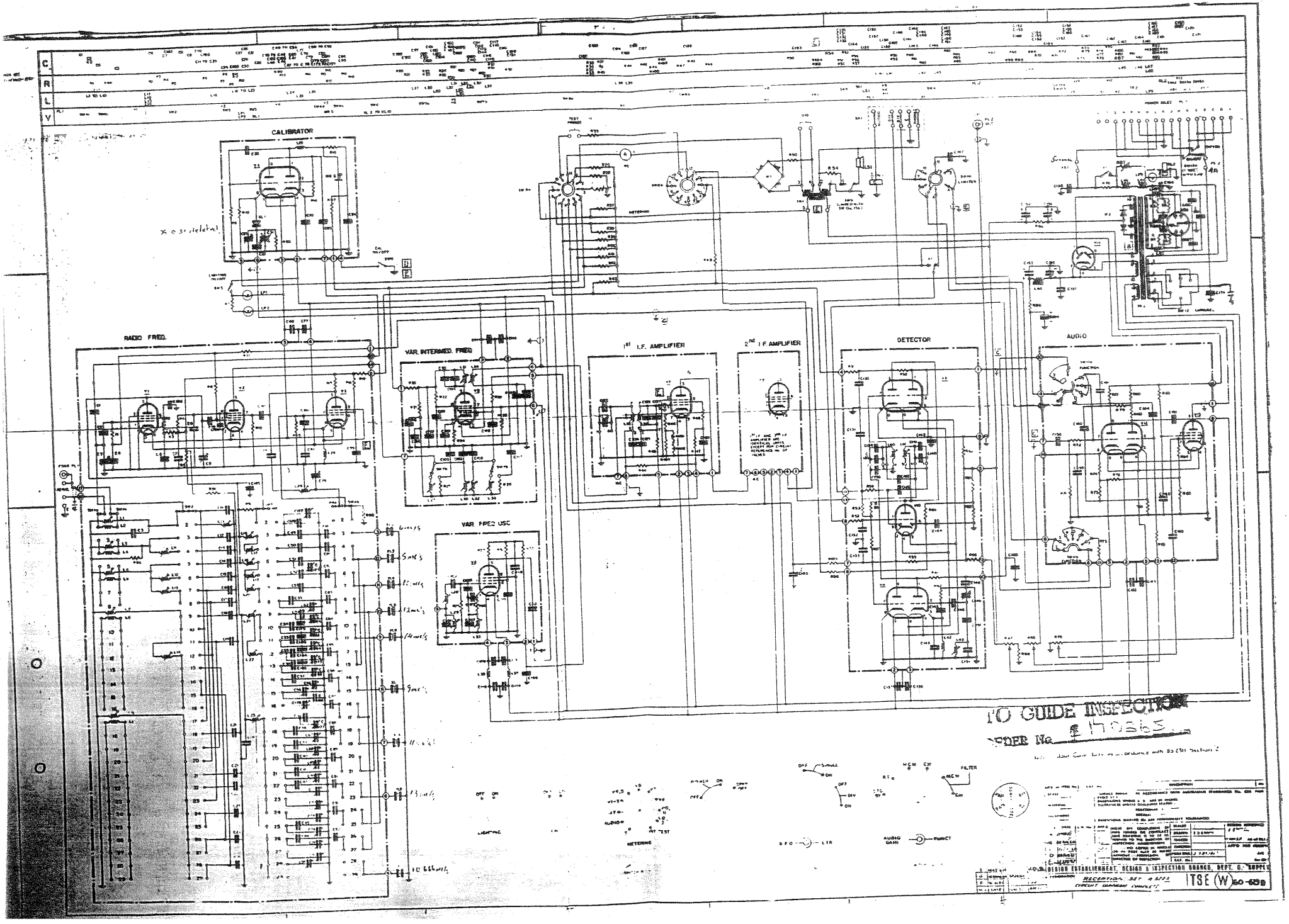
CALIBRATOR
RADIO FREQ.
VAR. INTERMED. FREQ
VAR. FREQ OSC
1st I.F. AMPLIFIER
2nd I.F. AMPLIFIER
DETECTOR
AUDIO
METERING
TO GUIDE INSPECTION
ORDER No. 170365
DESIGN ESTABLISHMENT, DESIGN & INSPECTION BRANCH, DEPT. O. SUPPLY
RECEPTION SET
CIRCUIT DIAGRAM COMPLETE
ITSE (W) 60-639

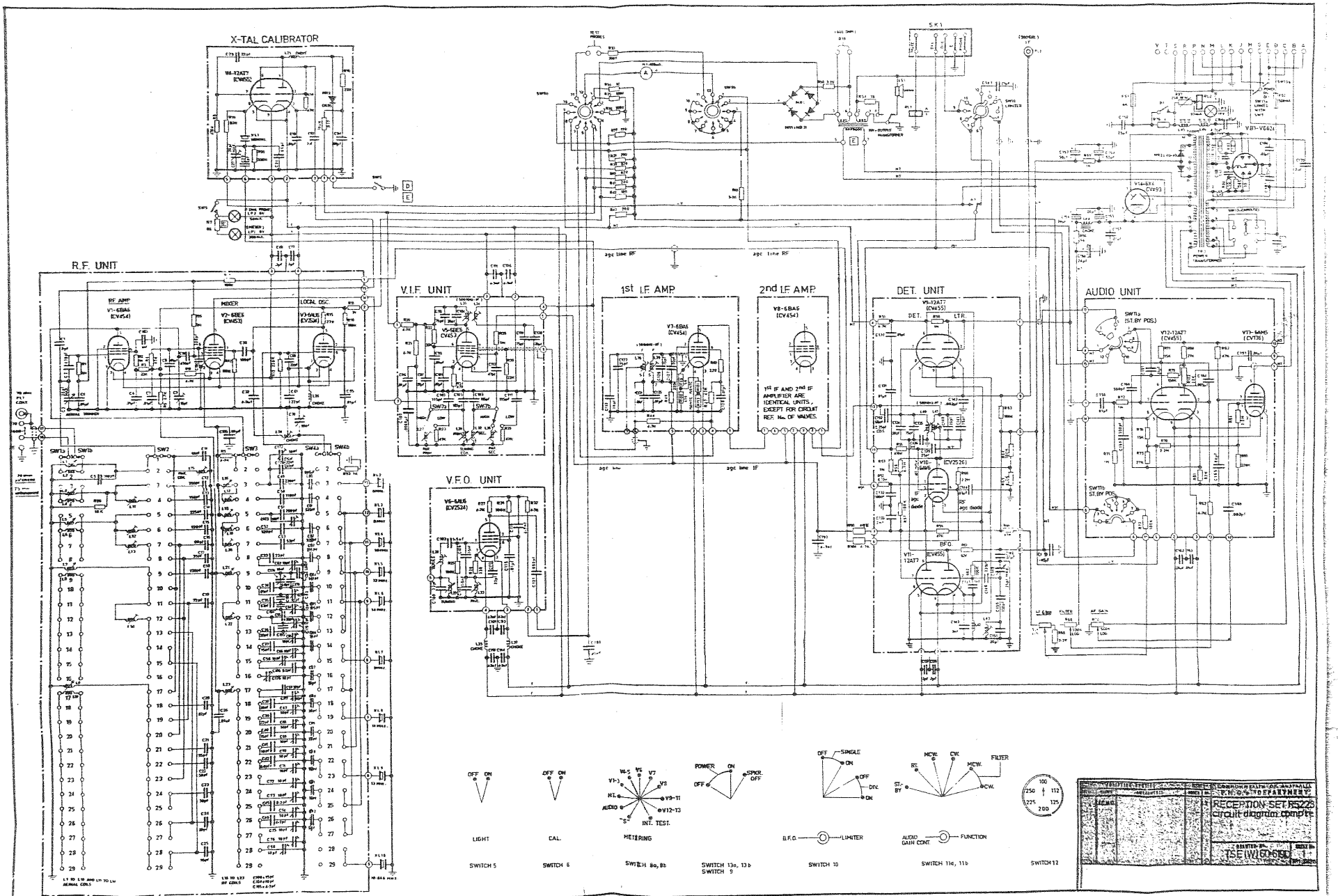
X-TAL CALIBRATOR
R.F. UNIT
V.I.F. UNIT
1st I.F. AMP
2nd I.F. AMP
DET. UNIT
AUDIO UNIT
V.F.O. UNIT
1st IF AND 2nd IF AMPLIFIER ARE IDENTICAL UNITS, EXCEPT FOR CIRCUIT REF. No. OF VALVES.
agc line RF
agc line IF
LIGHT
SWITCH 5
CAL.
SWITCH 6
METERING
SWITCH 8a, 8b
SWITCH 13a, 13b
SWITCH 9
SWITCH 10
SWITCH 11a, 11b
SWITCH 12
RECEPTION SET R5223
circuit diagram compte
TSE (W) 60-6190

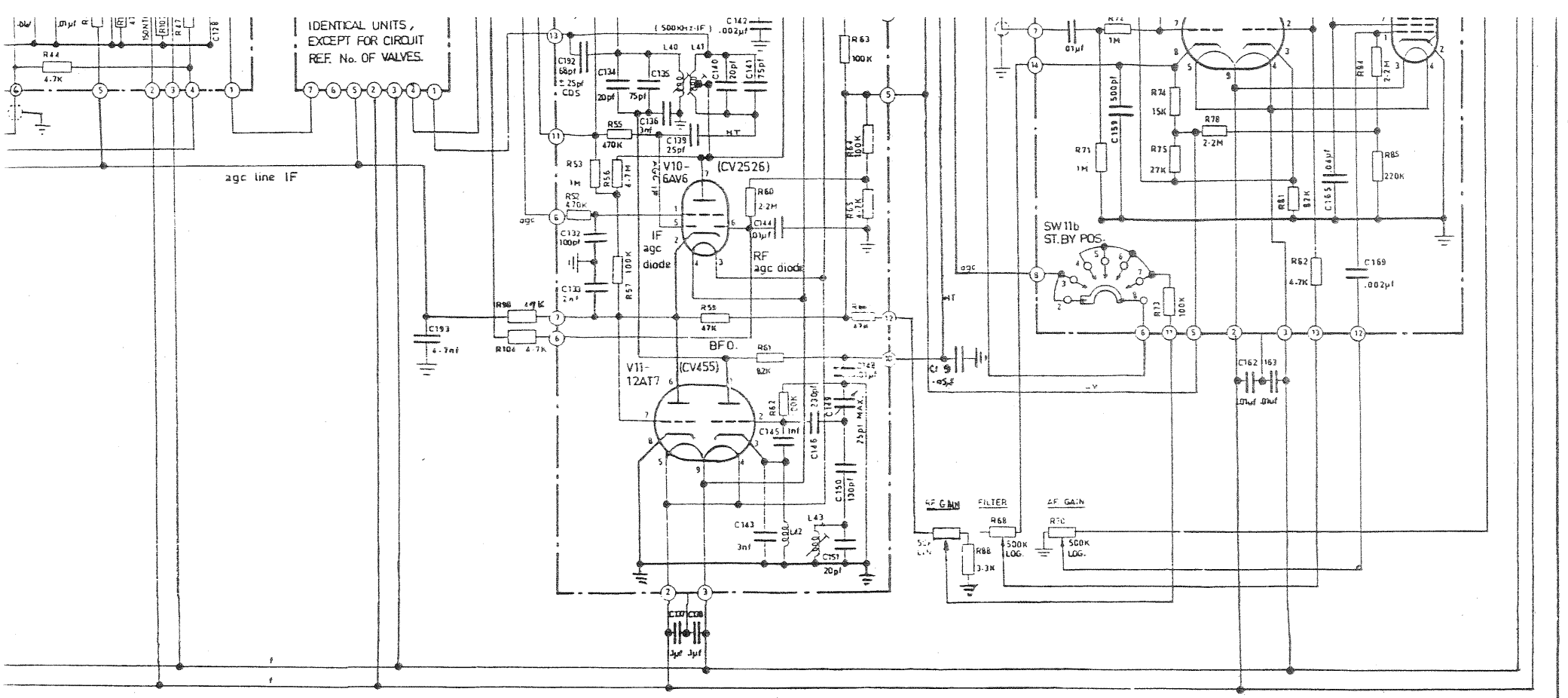

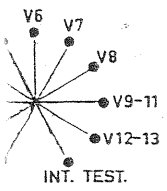

TERING

WITCH 8a, 8b

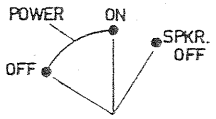

SWITCH 13a, 13b
SWITCH 9

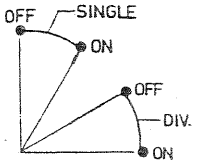

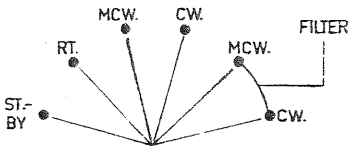

B.F.O. — LIMITER

SWITCH 10

AUDIO GAIN CONT. — FUNCTION

SWITCH 11a, 11b

SWITCH 12

DRAFTING SECTION			ISSUE	COMMONWEALTH OF AUSTRALIA
		AMENDMENTS		P.M.G.'s DEPARTMENT
				RECEPTION SET R5223 circuit diagram comp'te
				DRAWING No. TSE (W) 60-619D — SHEET No. 1 of 1 SHEETS

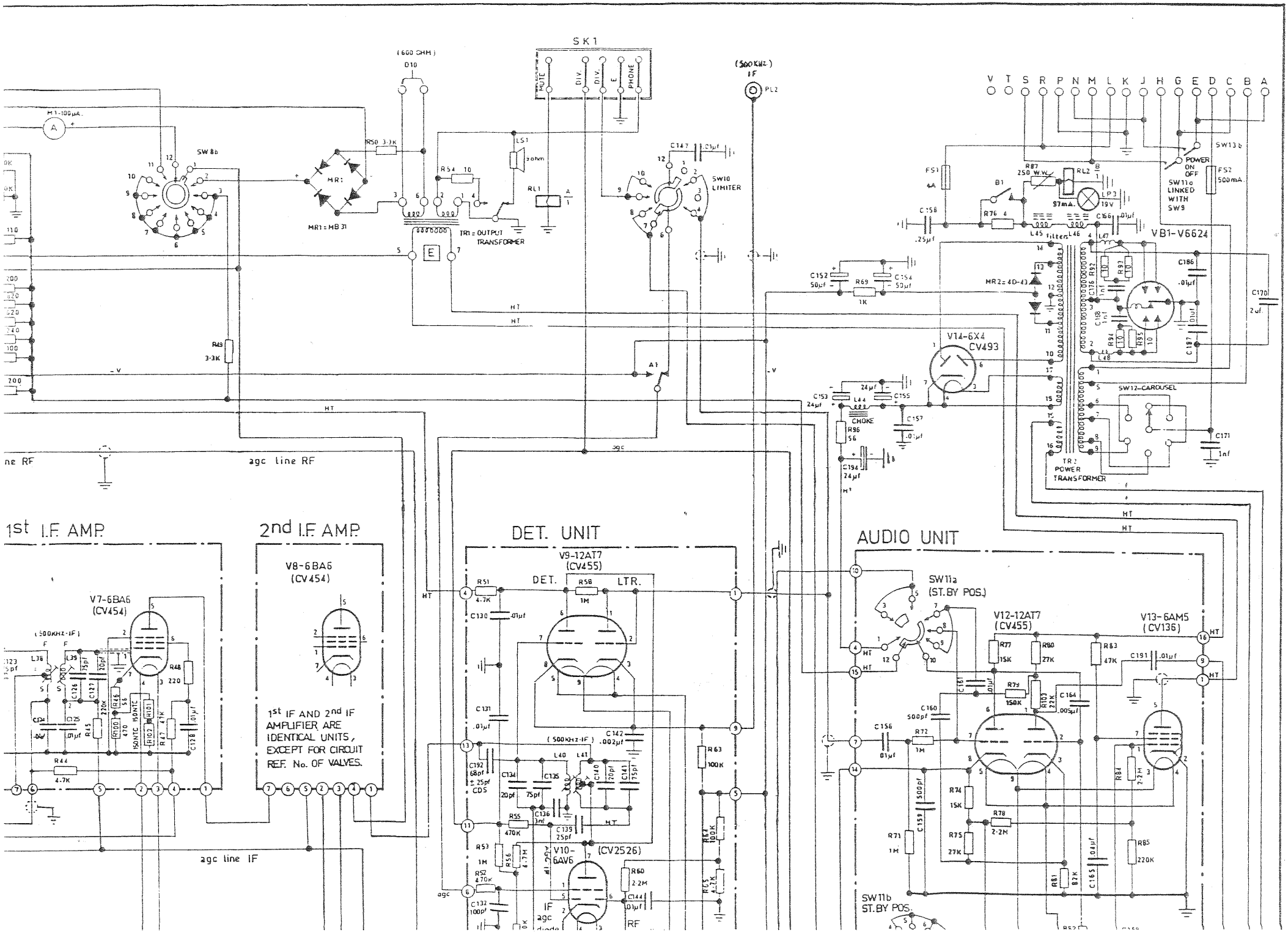
SK1
(600 OHM)
D10
MUTE
DIV.
DIV.
E
PHONE
(460KHz) IF
PL2
M1-100μA.
SW8b
MR1
MR1 = HB31
RS0 3·3K
R54 10
LS1 3 ohm
RL1
TR1 = OUTPUT TRANSFORMER
C147 .01μf
SW10 LIMITER
V T S R P N M L K J H G E D C B A
SW13b
POWER ON OFF
SW11c LINKED WITH SW9
FS1 4A
FS2 500mA.
B1
R87 250 W.W.
RL2
LP3 19V 97mA.
C158 .25μf
R76 4
L45 filters L46
C166 .01μf
VB1-V6624
MR2 = 4D-43
C152 50μf
R69 1K
C154 50μf
C186 .01μf
C170 2 uf.
V14-6X4 CV493
C153 24μf
L44 CHOKE
C155 24μf
C157 .01μf
R96 56
C194 24μf
SW12-CAROUSEL
C171 1nf
TR2 POWER TRANSFORMER
R49 3·3K
A1
-V
HT
agc line RF
agc line IF
1st I.F. AMP.
2nd I.F. AMP.
V7-6BA6 (CV454)
V8-6BA6 (CV454)
1st IF AND 2nd IF AMPLIFIER ARE IDENTICAL UNITS, EXCEPT FOR CIRCUIT REF. No. OF VALVES.
DET. UNIT
V9-12AT7 (CV455)
DET.
LTR.
R51 4·7K
R58 1M
C130 .01μf
C131 .01μf
C142 .002μf
C192 68pf ± 25pf CDS
C134 20pf
C135 75pf
C140 20pf
C141 75pf
L40
L41
R55 470K
C136 1mf
C139 25pf
R53 1M
R56 4·7M
R52 470K
C132 100pf
V10-6AV6 (CV2526)
R60 2·2M
C144 .01μf
R63 100K
R64 100K
R65 4·7M
IF agc diode
RF
AUDIO UNIT
SW11a (ST.BY POS.)
V12-12AT7 (CV455)
V13-6AM5 (CV136)
R77 15K
R80 27K
R83 47K
C191 .01μf
C161 .01μf
R73 150K
R103 22K
C164 .005μf
C160 500pf
C156 .01μf
R72 1M
C159 500pf
R74 15K
R78 2·2M
R75 27K
R71 1M
R84 2·7M
R85 220K
C165 .04μf
R81 82K
SW11b ST.BY POS.

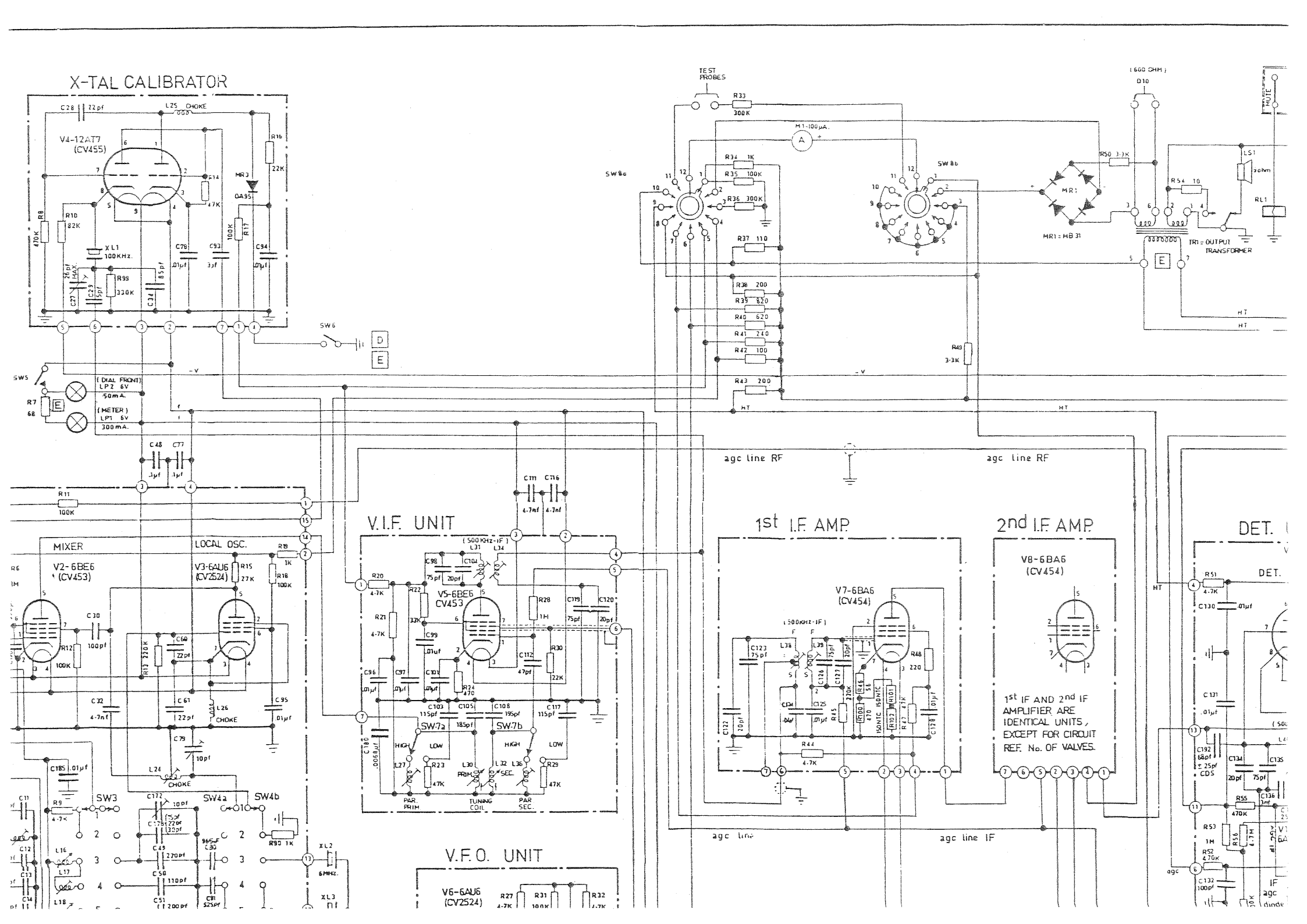
X-TAL CALIBRATOR
V4-12AT7 (CV455)
TEST PROBES
M1-100μA
SW8a
SW8b
MR1 = HB 31
TR1 = OUTPUT TRANSFORMER
(600 OHM)
MUTE
SW6
SW5
(DIAL FRONT) LP2 6V 50mA
(METER) LP1 6V 300mA
agc line RF
agc line RF
MIXER
LOCAL OSC.
V2-6BE6 (CV453)
V3-6AU6 (CV2524)
V.I.F. UNIT
V5-6BE6 CV453
(500KHz-IF)
SW-7a
SW-7b
HIGH
LOW
PAR. PRIM
TUNING COIL
PAR SEC.
1st I.F. AMP.
V7-6BA6 (CV454)
2nd I.F. AMP.
V8-6BA6 (CV454)
1st IF AND 2nd IF AMPLIFIER ARE IDENTICAL UNITS, EXCEPT FOR CIRCUIT REF. No. OF VALVES.
DET.
agc line
agc line IF
SW3
SW4a
SW4b
V.F.O. UNIT
V6-6AU6 (CV2524)
HT

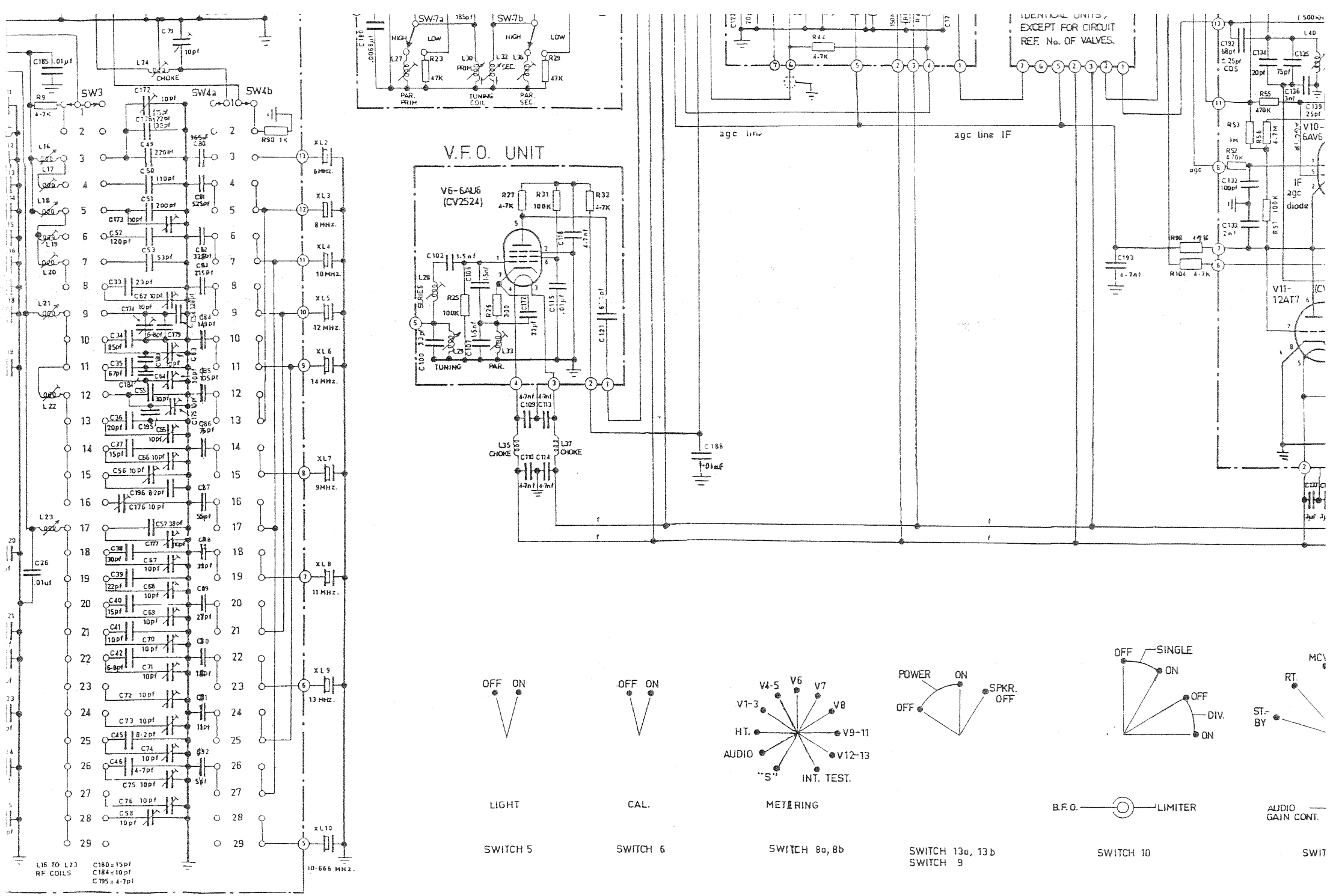

SW3
SW4a
SW4b
SW-7a
SW-7b
HIGH
LOW
PAR. PRIM
TUNING COIL
PAR. SEC.
V.F.O. UNIT
V6-6AU6 (CV2524)
TUNING
PAR.
agc line
agc line IF
IDENTICAL UNITS, EXCEPT FOR CIRCUIT REF. No. OF VALVES.
V10-6AV6
V11-12AT7
IF agc diode
L16 TO L23 RF COILS
C180 = 15pf
C184 = 10pf
C195 = 4·7pf
10·666 MHz.
OFF ON
LIGHT
SWITCH 5
CAL.
SWITCH 6
V4-5
V6
V7
V1-3
V8
HT.
V9-11
AUDIO
V12-13
"S"
INT. TEST.
METERING
SWITCH 8a, 8b
POWER
ON
OFF
SPKR. OFF
SWITCH 13a, 13b
SWITCH 9
SINGLE
DIV.
B.F.O.
LIMITER
SWITCH 10
RT.
ST.-BY
AUDIO GAIN CONT.

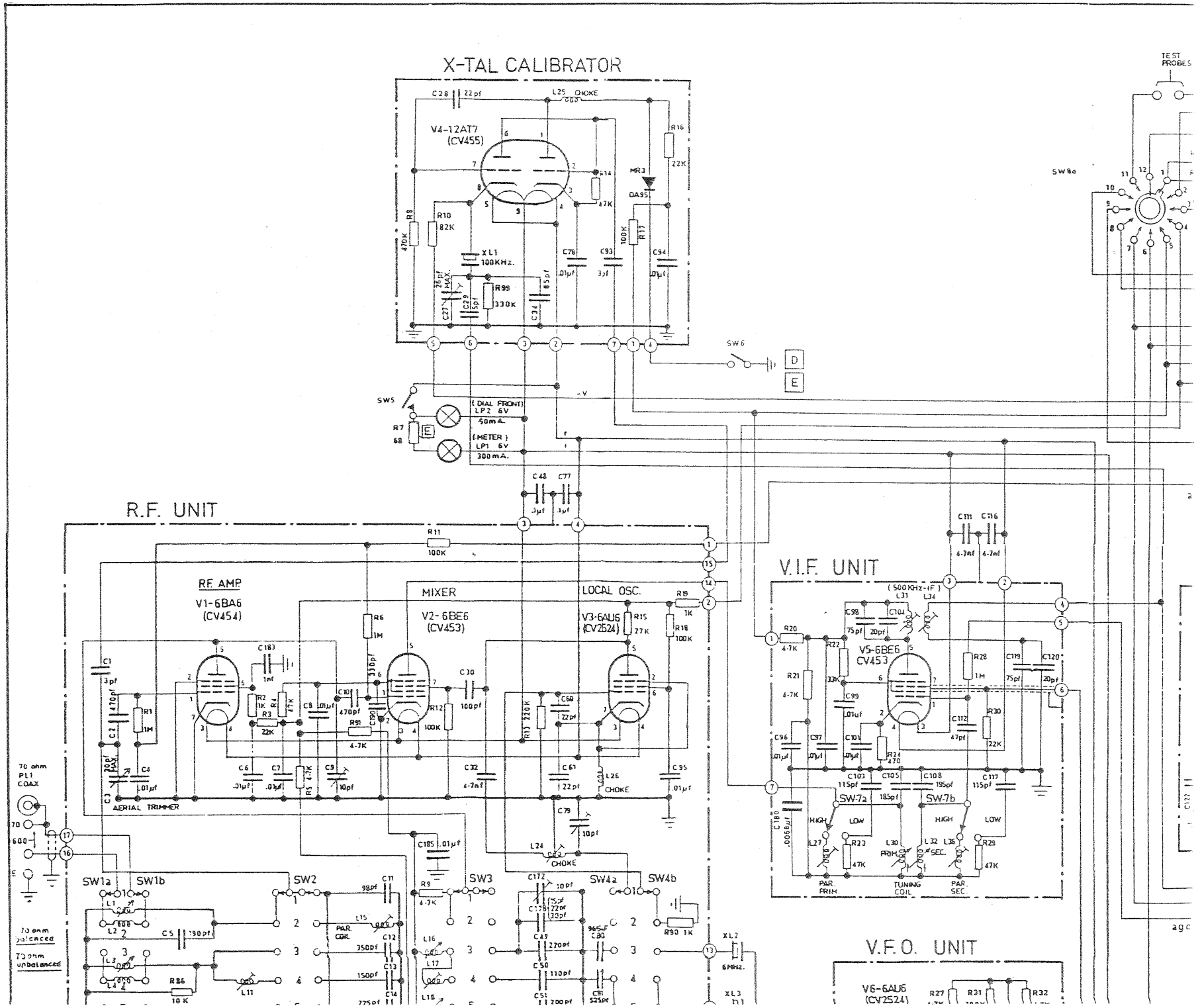
X-TAL CALIBRATOR
V4-12AT7
(CV455)
R.F. UNIT
RF AMP
V1-6BA6
(CV454)
MIXER
V2-6BE6
(CV453)
LOCAL OSC.
V3-6AU6
(CV2524)
V.I.F. UNIT
V5-6BE6
CV453
V.F.O. UNIT
V6-6AU6
(CV2524)
TEST PROBES
SW1a
SW1b
SW2
SW3
SW4a
SW4b
SW5
SW6
SW7a
SW7b
AERIAL TRIMMER
70 ohm PL1 COAX
70 ohm balanced
70 ohm unbalanced
(DIAL FRONT) LP2 6V 50mA.
(METER) LP1 6V 300mA.
PAR. COIL
PAR. PRIM
TUNING COIL
PAR. SEC.
HIGH
LOW
CHOKE
XL1 100KHz.
XL2 6MHz.
XL3

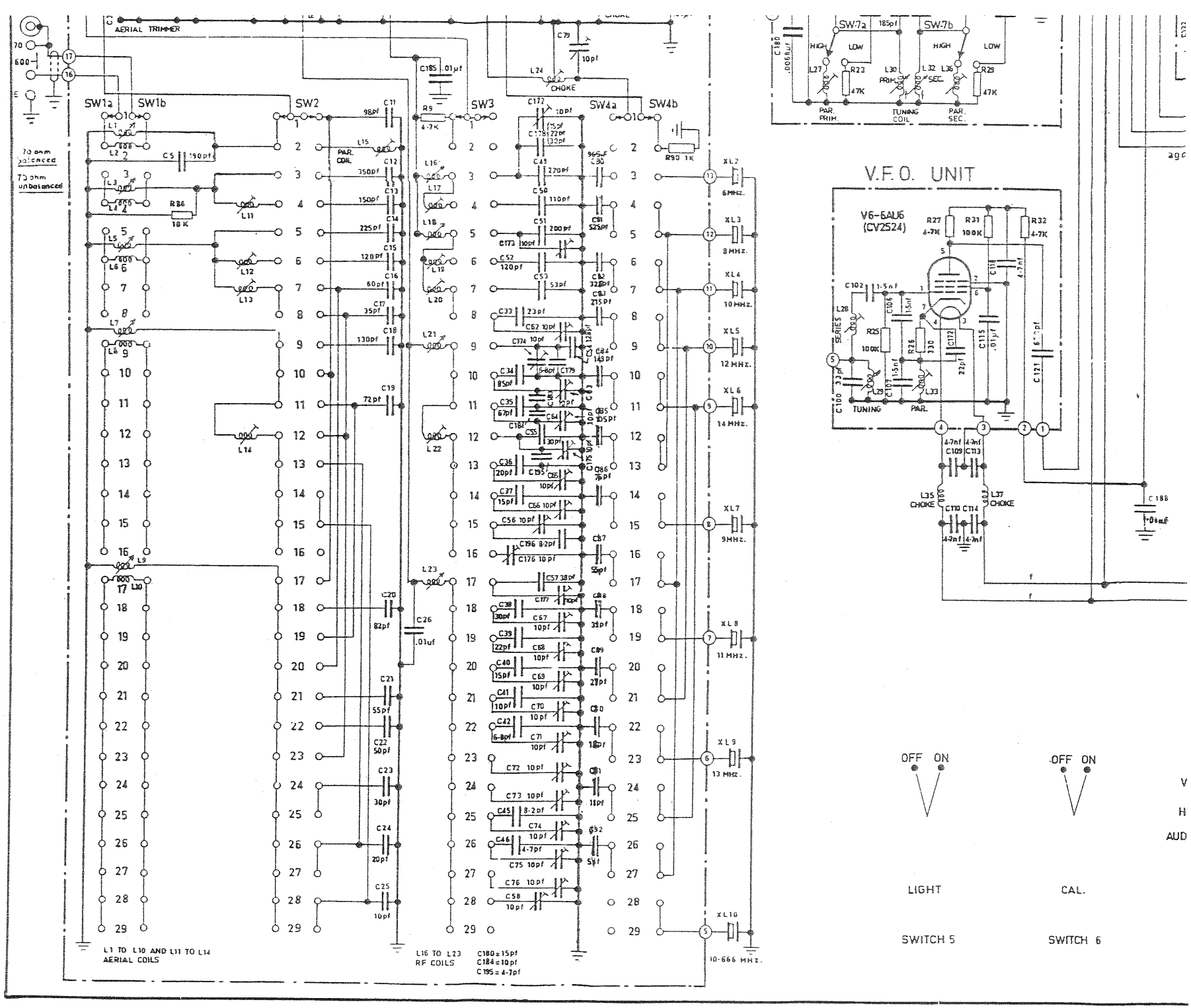
AERIAL TRIMMER
70 ohm balanced
75 ohm unbalanced
SW1a
SW1b
SW2
SW3
SW4a
SW4b
L1 TO L10 AND L11 TO L14
AERIAL COILS
L16 TO L23
RF COILS
C180 = 15pf
C184 = 10pf
C195 = 4-7pf
SW.7a
SW.7b
HIGH
LOW
PAR. PRIM
TUNING COIL
PAR. SEC.
V.F.O. UNIT
V6-6AU6
(CV2524)
TUNING
PAR.
SERIES
L35 CHOKE
L37 CHOKE
XL1
XL2
XL3
XL4
XL5
XL6
XL7
XL8
XL9
XL10
6 MHz.
8 MHz.
10 MHz.
12 MHz.
14 MHz.
9 MHz.
11 MHz.
13 MHz.
10-666 MHz.
OFF ON
LIGHT
SWITCH 5
CAL.
SWITCH 6