SCHE

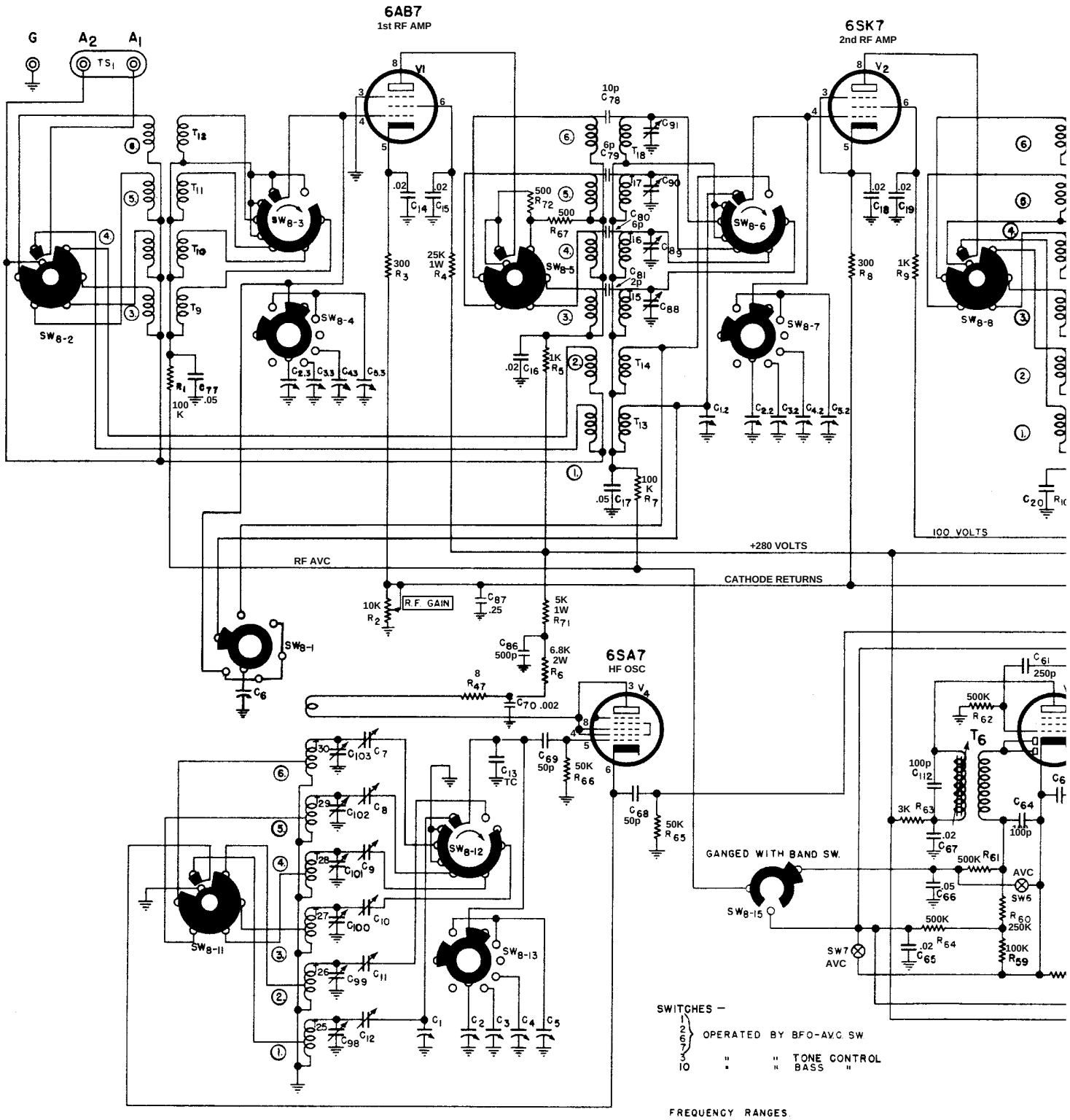

FREQUENCY RANGES.

1.	0.55 MC.	TO	1.6 MC.
2.	1.6 MC.	TO	3.0 MC.
3.	3.0 MC.	TO	5.8 MC.
4.	5.8 MC.	TO	11.0 MC.
5.	11.0 MC.	TO	21.0 MC.
6.	21.0 MC.	TO	43.0 MC.

AVC - BFO SWITCH

	LEFT	CENTER	RIGHT
SW1	OPEN	CLOSED	CLOSED
SW6	OPEN	CLOSED	CLOSED
SW7	OPEN	CLOSED	CLOSED
SW2	OPEN	OPEN	CLOSED
	AVC ON	AVC OFF	BFO ON