Amalgamated Wireless (Australasia) Ltd

INSTRUCTION BOOK NO. 1-6940R

6 VALVE M.F. MARINE RECEIVER

A.W.A. TYPES 1C6940 & 5C6940

47 York Street, Sydney

INSTRUCTION BOOK NO. 1-6940R

6 VALVE M.F. MARINE RECEIVER

A.W.A. TYPES 1C6940 & 5C6940

Amalgamated Wireless (A'sia) Limited

47 York Street

SYDNEY

071146

I N D E X

I N D E X

1. BRIEF SPECIFICATION

1.1 Application

The A.W.A. Receivers type 1C6940 and 5C6940 are manually-tuned, four-band, 6-valve superheterodynes designed for Marine communication on medium frequencies.

1.2 Frequency Coverage

Overall Range	100 Kc/s	-	3 Mc/s
	(3000 metres	-	100 metres)
RANGE A	1.5 Mc/s	-	3 Mc/s
	(200 metres	-	100 metres)
RANGE B	600 Kc/s	-	1700 Kc/s
	(500 metres	-	175 metres)
RANGE C	230 Kc/s	-	660 Kc/s
	(1300 metres	-	450 metres)
RANGE D	100 Kc/s	-	260 Kc/s
	(3000 metres	-	1150 metres)
I.F. Frequency	95 Kc/s		
Emergency Frequency	500 Kc/s	(600 metres)	

1.3 Circuit Arrangement

The circuit arrangement consists of an R.F. amplifier type 6U7-G feeding from the aerial to the heptode section of a 6J8-G mixer. The triode section of this valve acts as the local oscillator. The mixer is followed by one stage of I.F. amplification employing a type 6U7-G. For C.W. reception, a type 6U7-G operates as the "beat oscillator". The I.F. Amplifier is followed by a type 6G8-G which functions as second detector, A.V.C. rectifier and first A.F. amplifier. The final stage is a type 6U7-G (for the 1C6940 receiver) or a type 6V6-G (for the 5C6940 receiver) operated as a power amplifier, and feeding into a multi-range output transformer.

Two gain controls are provided. The R.F. gain control varies the bias on all valves prior to the second detector. The A.F. gain control operates in the load circuit of the second detector and varies the input voltage applied to the A.F. amplifier.

SECTION 1 (Contd.)

1.4 Emergency Facility

A self-contained Crystal Receiver type 2C1562 is embodied in this Marine equipment for emergency operation. It functions when the aerial and phones are connected in circuit and is designed for use at 500 Kc/s (600 metres) only. Adjustments for 500 Kc/s operation should be preset by the installation engineer and marked on Drawing No. 1562D1 at the back of this Instruction Book. The positions of aerials and detector taps should be shown and also an arrow head drawn on the tuning control to indicate its position.

The crystal is a "Perikon" type and is semi-permanent in operation. Adjustment should be made by withdrawing the plunger, slightly rotating it and allowing it to return gently, until loudest signals are heard. Do not grind the crystal surfaces together.

1.5 Characteristics

1.5.1 Sensitivity

(a) Overall

For 6 mW output across 600 ohms

4 to 5 µV on all ranges.

(b) I.F.

For 6 mW output across 600 ohms:-

95 µV measured on RANGE D.

1.5.2 A.V.C.

With the aerial input varied from 100 µV to 100 mV, the audio output does not change more than ± 10 db from that produced by an aerial input of 1 mV.

1.6 Power Input

H.T.:- 120 Volts D.C.

L.T.:- 6 Volts D.C.

The H.T. input may be obtained from suitable dry batteries or accumulators.

SECTION 1 (Contd.)

Alternatively, both H.T. and L.T. may be obtained from a 6V accumulator, using the A.W.A. Vibrator Power Unit type H50741, which is specially designed for this receiver.

H.T. and L.T. supplies connect to the receiver via terminals at the rear of the chassis.

1.7 Output Impedances

Outputs obtainable across transformer T16:-

2000 ohms winding	-	high resistance phones
600 ohms winding	-	low resistance phones or line feeder
13.5 ohms winding) 1.5 ohms winding)	-	Direct connection to voice coil of per-mag speaker.

1.8 Mechanical Construction

The receiver is built on a steel chassis, enclosed in a steel case, with controls at the front. The case has removable covers which provide access to the components for servicing and alignment.

1.9 Weights and Dimensions

Overall Height	10¼"
Length	18"
Depth	11.7/8
Weight	35 lbs. approx.

1.10 Valve Complement

R.F. Amplifier	Type 6U7-G
Oscillator-Mixer	Type 6J8-G
I.F. Amplifier	Type 6U7-G
2nd Detector, A.V.C., and 1st A.F. Amplifier	Type 6G8-G

SECTION 1 (Contd.)

Output Valve (1C6940)	Type 6U7-G
Output Valve (5C6940)	Type 6V6-G
Heterodyne Oscillator	Type 6U7-G

Total Complement

Type 6G8-G	1 off
Type 6J8-G	1 off
Type 6U7-G	4 off (1C6940) 3 off (5C6940)
Type 6V6-G	1 off (5C6940 only)

2. INSTALLATION

The receiver may be mounted in any convenient position on the operator's table, due consideration being given to the position of the aerial and R.F. earth leads and to ease of operation.

Valves should be fitted in their respective sockets according to the stencilled markings on the chassis and should be pushed firmly home. Valve shields should be fitted where required and the grid clips attached to the correct valves as shown in the accompanying chassis layout diagrams.

The aerial (A) and R.F. earth (R.E.) connections should be made to the spring terminals as indicated in the above drawing, the R.F. earth lead being as short and direct as possible.

For improved performance a separate aerial of about 50 ft. should be used instead of the normal ship's aerial. This will give adequate reception range, while broadcast interference, if any, will be reduced.

3. OPERATING INSTRUCTIONS

3.1 Controls

(a)	A.F. VOL.	Audio volume control. Clockwise rotation increases volume.
(b)	OFF, STAND-BY, M.C.W.-SPH., C.W.	4-position switch. Combined battery switch and facility selector. In STAND-BY position valve heaters are connected but H.T. is removed. In M.C.W.-SPH. position the A.V.C. is on and the heterodyne ("beat") oscillator off. In C.W. position the A.V.C. is inoperative and the heterodyne oscillator is on.
(c)	TONE	Attenuates the higher audio frequencies. Can be used to reduce the effects of noise and high-pitched interfering beat notes.
(d)	PHONES	Phone jack, frame earthed.
(e)	RANGE A, B, C, D	4-position switch, selecting the required frequency range as shown on the dial scale.
(f)	R.F. VOL.	Radio frequency volume control. Clockwise rotation increases volume.
(g)	TUNING	3-gang variable capacitor, operated through a single control giving direct drive and 54:1 vernier. Dial calibrated on semi-circular scale in metres and kilocycles.

3.2 Switching "On" receiver for C.W. reception

(i) Turn the battery switch to C.W. and wait about 30 seconds for the valves to warm up. Signals or receiver noise should now be heard unless both volume controls are at a low setting.

(ii) Set the RANGE switch to the appropriate range.

(iii) Set the tuning control as close as possible to the frequency to be received.

(iv) Turn A.F. VOL. control to a maximum.

(v) Adjust the tuning control about the setting in (iii), using the vernier knob, until the "beat" note is satisfactory. At the same time adjust the R.F. VOL. control for the desired output level.

SECTION 3 (Contd.)

3.3 Switching "On" receiver for M.C.W. or Speech reception

(i) Turn the battery switch to M.C.W.-SPH. and wait about 30 seconds for the valves to warm up. Signals or receiver noise should now be heard unless both volume controls are at a low setting.

(ii) Set the RANGE switch to the appropriate range.

(iii) Set the tuning control as close as possible to the frequency to be received.

(iv) Turn R.F. VOL. control to a maximum.

(v) Adjust the tuning control to the centre of the signal where the background noise should be at a minimum. At the same time adjust the A.F. VOL. control to the desired output level.

The R.F. VOL. control may be used to reduce noise when tuning between stations. Adjust the control, while not tuned to a station, to a point at which excessive noise disappears. Phone stations above this level may now be tuned in the normal manner, while noise between stations will remain at a reasonable level.

3.4 STD. BY Position

When the receiver is temporarily not required, but must be kept ready for immediate use, the battery switch may be turned to the STD.BY Position. The receiver is thus silenced, and battery current is conserved.

4. MAINTENANCE

4.1 General

4.1.1 Inspection of Components

(i) The lid of the receiver case may be removed by opening the two clips at the back of the case, and lifting the lid clear of the two locating pins at the front.

(ii) The base may be removed, on turning the receiver upside down, by taking out six screws. It may first be necessary to unscrew the receiver from the table on which it is mounted, before the rear screws can be reached.

4.1.2 Preliminary Checking

Should the receiver fail to operate, first remove the lid and check that all valves are alight. Replace with spares any which do not reveal a glow at the centre filament. However, if none are alight, check the L.T. voltage at the rear terminal, and if this is normal, remove the valves and test them for continuity of heater. Replace with spares where necessary.

If no fault is found with the L.T. circuit, check the H.T. voltage at the rear terminal, and if this is normal, substitute good spares for each working valve, one at a time.

For further testing of the receiver, the H.T. and L.T. leads should be disconnected, and the base removed as in 4.1.1 above. The various components can be identified by reference to the circuit and layout diagrams.

Re-connect the H.T. and L.T. leads, and when the receiver is switched on, voltage measurements may be made.

4.1.3 Valve Voltages (approximate)

		Plate to Chassis	Screen to Chassis	Cathode to Chassis
6U7-G	R.F. Amp.	120 V	35 V	1.5 V
6J8-G	1st Det. Heptode	120 V	110 V	5.0 V
6J8-G	Triode	120 V	---	---
6U7-G	I.F. Amp.	120 V	35 V	2.0 V
6U7-G	Het. Osc.	30 V *	---	---
6G8-G	2nd Det., 1st A.F.	15 V *	20 V *	2.0 V
6U7-G	Output (1C6940)	112 V	---	6.5 V
6V6-G	Output (5C6940)	100 V	100 V	5.0 V

SECTION 4 (Contd.)

Receiver set at RANGE A, tuning at 2.0 Mc/s.

Volume controls at maximum position.

Plate and Screen voltages measured on 250 V. range, 1000 ohms/V. meter.

Cathode voltages measured on 10 V. range, 1000 ohms/V. meter.

X Cannot be read accurately on ordinary voltmeter.

4.1.4 Colour Code

As far as possible, different coloured wires are used for connecting the components on the receiver, the general scheme being as follows:-

Red	B +
White	Cathode wiring
Orange	Plate connection
Yellow	Heater wiring
Blue	B + screens
Green	Grid connection
Black	A.V.C. and earth wiring

This will be of assistance in tracing connections but should not be entirely relied upon as it may be necessary to make some variations from these colours.

4.2 Alignment Procedure

Unless it is felt certain that the alignment of the receiver is incorrect, it is not desirable to alter the adjustments from the factory setting. However, when repairs have been made to R.F. or I.F. circuits, or tampering with circuits is suspected, complete re-alignment becomes necessary.

In aligning the tuned circuits, it is important to apply a definite procedure as described below and to use adequate and reliable test equipment. The A.W.A. Modulated Oscillator Type J6726 is suitable for the purpose. Visual indications of output are also desirable and any output meter of conventional design is suitable.

SECTION 4 (Contd.)

4.2.1 I.F. Alignment

The I.F. adjustment screws are at opposite ends of the transformers, and control movable powdered-iron cores within the windings.

To align, proceed as follows:-

(i) Remove the grid clip from the control grid of the type 6J8-G and connect in its place the output of the modulated oscillator, the ground connection being made to the receiver chassis. See that a 250,000 ohm resistor is connected between the output terminals of the oscillator.

(ii) Connect an output meter across the 'phone terminals.

(iii) Switch the receiver on for M.C.W.-SPH. reception.

(iv) Turn the tuning gang full in and turn the volume controls to maximum. Set RANGE switch to RANGE A.

(v) Set the modulated oscillator to 95 Kc/s. and switch it on.

(vi) Adjust the output of the modulated oscillator so that a slight indication is apparent on the output meter.

NOTE: The output of the modulated oscillator should be maintained at the lowest level consistent with a good output indication. This will avoid A.V.C. action which will give apparent broad tuning.

(vii) Adjust the last I.F. transformer secondary (top screw), for maximum output. Reduce output from the modulated oscillator if necessary. Next adjust the last I.F. transformer primary (bottom screw), and the first I.F. transformer primary (bottom screw), for maximum output. Finally, set the top screw (secondary) of the first I.F. transformer fully out. This completes the I.F. alignment. The I.F. sensitivity measured with the range-switch set to RANGE A and the tuning dial adjusted to 2.0 Mc/s. should not be greater than 100 microvolts for an output of 6 milliwatts into a 600 ohm load.

4.2.2 R.F. Alignment

The coils are mounted on the RANGE switch assembly and

SECTION 4 (Contd.)

on the chassis. RANGES A and B are mounted on the switch shields while RANGES C and D are on common formers in shield cans on the chassis. RANGES A and D are provided with iron cores for fine adjustment of inductance while the minimum capacitance adjustments of the various circuits are made by plunger trimmers in the case of RANGES B, C and D and by screw trimmers mounted on the RANGE switch shields in RANGE A. The padding capacitor is fixed in each case, though a fine adjustment is available by means of the iron core in RANGES A and D.

Alignment should be done with the receiver set for M.C.W.-SPH. reception.

To align, proceed as follows:-

(a) RANGE A, 3,000-1,500 Kc/s

(i) Connect the output of the modulated oscillator to the aerial terminal marked "A", the ground connection being made to the radio earth terminal marked "R.E." Turn the tuning gang fully in, then adjust the pointer to the line marked S immediately above the "C" on the dial scale, moving the dial on the shaft if necessary.

(ii) Now set the dial to 3 Mc/s. See that the A.F. VOL. and R.F. VOL. controls are in maximum clockwise position.

(iii) Set the Modulated Oscillator to 3 Mc/s.

(iv) Adjust the oscillator trimmer (C31) to a point where maximum reading is obtained on the output meter.

(v) Adjust the R.F. (C17) and aerial (C6) trimmers in the same manner for maximum output.

(vi) Check for the image signal which should be at 2,810 Kc/s. Should this signal be received at some other frequency, this will indicate that the wrong peak on the oscillator trimmer has been used. If so, repeat step (iv) to select the other peak.

(vii) Set the modulated oscillator to 1.6 Mc/s.

(viii) Set tuning dial to 1.6 Mc/s.

SECTION 4 (Contd.)

(ix) Adjust the magnetite cores on the oscillator coil (T12), the aerial coil (T4) and the R.F. coil (T8) for maximum response on the output meter.

(x) Check calibration and alignment at 2.3 Mc/s.

(b) Alignment for RANGE B

(i) Set the pointer to 1,600 Kc/s.

(ii) Set the modulated oscillator to the same frequency.

(iii) Reduce or increase the oscillator trimmer (C28) until the signal from the modulated oscillator is indicated on the output meter.

(iv) Adjust the aerial and R.F. trimmers (C5) and (C16) for maximum reading on the output meter while tuning the receiver continuously backwards and forwards around the signal.

Check for the image signal by tuning the receiver to approximately 1,410 Kc/s. It will be necessary to increase the output of the modulated oscillator for this check.

There is no adjustment at the low frequency end of the band, the fixed padder in this case having a comparatively large capacitance. The calibration and alignment should be checked at 1,100 Kc/s. and 700Kc/s.

For the alignment of RANGE C, the procedure is the same as for RANGE B, the tuning point being, in this case, 750 Kc/s. Check the alignment and calibration 440 Kc/s. and 260 Kc/s. The image point will be at 560 Kc/s. The oscillator trimmer is C26 and aerial and R.F. trimmers are C4 and C15.

RANGE D is aligned in a similar manner to RANGE A, trimmers being peaked at 250 Kc/s. An iron-core adjustment at the low frequency end of the band (110 Kc/s.) is available. Calibration should be checked at 180 Kc/s. The oscillator trimmer is C25 and aerial and R.F. trimmers are C3 and C14.

4.3 Heterodyne Oscillator Adjustment

To adjust the heterodyne oscillator during the receiver alignment, proceed in the following manner:-

SECTION 4 (Contd.)

(i) Follow the instructions for I.F. alignment up to step (vi).

(ii) Switch off the modulation from the Modulated Oscillator and switch on the heterodyne oscillator by turning the battery switch to C.W.

(iii) Adjust the iron slug by means of the slotted screw to the position which gives a beat note of about 1,000 cycles. The adjustment may be on either side of zero beat.

This adjustment may be done by using an incoming signal, proceeding as follows:-

(iv) Tune in a weak modulated signal with the battery switch in the M.C.W.-SPH. position, taking great care to adjust to the exact centre of the signal.

(v) Now turn the battery switch to the C.W. position and adjust the slug as indicated in (iii) above.

If bad interference is encountered with the heterodyne oscillator set to one side of zero beat, the interference will probably disappear if the setting on the other side of zero beat is used.

5. COMPONENT SCHEDULE

Circ.Ref. No.	Description	Purpose	A.W.A. Type N (unless otherwise
(a) Capacitors			
C1	500 μμF, 750V.W., mica	D.C. blocking	22487
C2	500 μμF, 750V.W., mica	D.C. blocking	22487
C3	2-20 μμF, piston trimmer	trimmer adjust.	3661
C4	2-20 μμF, piston trimmer	trimmer adjust.	3661
C5	2-20 μμF, piston trimmer	trimmer adjust.	3661
C6	2.5-30 μμF trimmer	trimmer adjust.	18710
C7	70 μμF, 750V.W., mica	trimmer adjust.	13211
C8	Variable capacitor (3 gang)	tuning	12713
C9	200 μμF, 500V.W., mica	grid coupling	22426
C10	0.1 μF, 350V.W., paper	V1 cathode by-pass	22812
C11	0.1 μF, 350V.W., paper	V1 screen by-pass	22812
C12	9 μμF, 750V.W., mica	gain compensation	13211
C13	50 μμF, 750V.W., mica	primary tuning (T5)	22485
C14	2-20 μμF, piston trimmer	trimmer adjust.	3661
C15	2-20 μμF, piston trimmer	trimmer adjust.	3661
C16	2-20 μμF, piston trimmer	trimmer adjust.	3661
C17	2.5-30 μμF, trimmer	trimmer adjust.	18710
C18	70 μμF, 750V.W., mica	trimmer adjust.	13211
C19	Variable capacitor (3 gang)	tuning	12713
C20	200 μμF, 500V.W., mica	grid coupling	22426
C21	0.1 μF, 350V.W., paper	V3 cathode by-pass	22812
C22	115 μμF, 750V.W., mica	osc. grid coupling	13214

INSTRUCTION BOOK NO. 1-6940R

AMENDMENT 140447

The following changes have been made to the components listed below:-

(i) **Resistors:-**

R1 and R12 become - 0.1 Megohm, 1/4 watt, carbon, Code No. 600119

(ii) **Capacitors:-**

C1 and C2 become - 5,000 μμF, 500V.W., mica, Code No. 224,295

C27 becomes - 630 μμF, 500V.W., mica, Code No. 224,277.

INSTRUCTION BOOK NO. 1-6940R

AMENDMENT 110647

The following corrections and addition to the Component Schedule should be noted.

Capacitor C24 is now 290 μμF., ± 2½%, 500V.W., mica, Code No. 13212.

Capacitor C61 was added and is 9 μμF., 500V.W., mica, Code No.13211.

Resistor R5 is deleted.

Transformer T10 is type 4874A8/96.

SECTION 5 (Contd.)

Circ.Ref. No.	Description	Purpose	A.W.A. Type No. (unless otherwise stated)
C23	14 μμF, 500V.W., mica	trimmer adjust.	13211 X
C24	394 μμF ± 2½%, 500V.W., mica	RANGE D padder	13212 X
C25	2-20 μμF, piston trimmer	trimmer adjust.	3661
C26	2-20 μμF, piston trimmer	trimmer adjust.	3661
C27	730 μμF, 500V.W., mica	RANGE C padder	13212 X
C28	2-20 μμF, piston trimmer	trimmer adjust.	3661
C29	2075 μμF, 500V.W., mica	RANGE B padder	13213 X
C30	7000 μμF, 750V.W., mica	RANGE A padder	X
C31	2.5-30 μμF, air trimmer	trimmer adjust.	1S7105
C32	70 μμF, 750V.W., mica	trimmer adjust.	13211 X
C33	0.1 μF, 350V.W., paper	V2 screen by-pass	228121
C34	8 μF, 450V.W., electro.	B + smoothing	222522
C35	0.1 μF, 350V.W., paper	V3 cathode by-pass	228121
C36	180 μμF, 500V.W., S.M.	Primary tuning (T13)	3S7948 X
C37	180 μμF, 500V.W., S.M.	Secondary tuning (T13)	3S7948 X
C38	180 μμF, 500V.W., S.M.	Primary tuning (T14)	3S7948 X
C39	180 μμF, 500V.W., S.M.	Secondary tuning (T14)	3S7948 X
C40	200 μμF, 500V.W., mica	A.V.C. diode coupling	224267
C41	200 μμF, 500V.W., mica	Diode load by-pass	224267
C42	200 μμF, 500V.W., mica	Diode load by-pass	224267
C43	0.05 μF, 350V.W., paper	V4 grid coupling	228115
C44	25 μF, 40V.P., electro.	V4 cathode by-pass	222912
C45	0.1 μF, 350V.W., paper	R.F. by-pass	228121

SECTION 5 (Contd.)

Circ.Ref. No.	Description	Purpose	A.W.A. Type No. (unless otherwise st
C46	0.1 µF, 350V.W., paper	V4 screen by-pass	22812
C47	0.5 µF, 350V.W., paper	V4 plate decoupling	22813
C48	0.05 µF, 350V.W., paper	V5 grid coupling	22811
C49	200 µµF, 500V.W., mica	Het. Osc. tuning	22426
C50	200 µµF, 500V.W., mica	Het. Osc. grid coupling	22426
C51	0.1 µF, 350V.W., paper	Het. Osc. plate by-pass	22812
C52	0.005 µF, 700V.W., paper	V5 plate by-pass	22829
C53	0.05 µF, 350V.W., paper	Tone control	22811
C54	25 µF, 40V.P., electro.	V5 cathode by-pass	22291
C55	0.1 µF, 350V.W., paper	A.V.C. decoupling	22812
C56	200 µµF, 500V.W., mica	V3 grid coupling	22426
C57	Variable capacitor (3 gang)	tuning	12713
C58	4 µµF, 750V.W., mica	Het. Osc. coupling	13211
C59	0.1 µF, 350V.W., paper	V5 Screen by-pass (5C6940 only)	22812

(b) Resistors

R1	100,000 Ω, 1/3W, carbon	Static leak	60012
R2	0.5 MΩ, 1/2W, carbon	V1 grid leak	60033
R3	500 Ω, 1/2W, carbon	V1 bias	60027
R4	100,000 Ω, 1W, carbon	Screen feed V1 & V3	60072
R5	200 Ω, 1/3W, carbon	gain control	60006
R6	150 Ω, 1/3W, carbon	gain control	X

SECTION 5 (Contd.)

Circ.Ref. No.	Description	Purpose	A.W.A. Type No. (unless otherwise stated)
R7	200 Ω, 1/3W, carbon	gain control	600067
R8	3,000 Ω, variable	R.F. gain control	6940A7/114
R9	0.5 MΩ, 1/2W, carbon	V2 grid leak	600335
R10	500 Ω, 1/2W, carbon	V2 bias	600275
R11	50,000 Ω, 1/4W, carbon	Osc. grid leak	600115
R12	100,000 Ω, 1/2W, carbon	I.F. Damping	600321
R13	2,000 Ω, 1W, carbon) in series with) 5,000 Ω, 1W, carbon)	V2 screen feed	600487 600495
R14	1,000 Ω, 1W, carbon	V3 bias	600681
R15	Not used.		
R16	1.7 MΩ, 1/4W, carbon	A.V.C. decoupling	X
R17	1.7 MΩ, 1/4W, carbon	A.V.C. diode leak	X
R18	500,000 Ω, variable	Audio Vol. Control	620135
R19	50,000 Ω, 1/4W, carbon	Diode load decoupling	600115
R20	1.0 MΩ, 1W, carbon	V4 grid leak	600741
R21	3,000 Ω, 1/3W, carbon	V4 bias	X
R22	1.0 MΩ, 1W, carbon	V4 screen feed	600741
R23	50,000 Ω, 1W, carbon	V4 plate decoupling	600715
R24	0.5 MΩ, 1/2W, carbon	V5 grid leak	600335
R25	200,000 Ω, 1W, carbon	V4 plate load	600727
R26	50,000 Ω, 2W, carbon	V6 plate decoupling	600915
R27	100,000 Ω, 1/2W, carbon	V6 grid leak	600321
R28	1,000 Ω, 1W, carbon	V5 bias (1C6940 only)	600681

SECTION 5 (Contd.)

Circ.Ref. No.	Description	Purpose	A.W.A. Type No. (unless otherwise st
R28	320 Ω, 1W, carbon	V5 bias (5C6940 only)	600471
R29	100,000 Ω, variable	Tone control	620,121
R30	16,000 Ω, 1W, carbon	V5 screen feed (5C6940 only)	600,505

(c) Sockets

V1 to V6	Octal socket	S4216

(d) Switches

S1	Wavechange switch	6940E1/75
S2	Oak switch	6940E2/122

(e) Transformers and Coils

T1	Aerial coil 100-250 Kc/s.	4874A8/98
T2	Aerial coil 240-700 Kc/s.	4874A8/98
T3	Aerial coil 600-1700 Kc/s.	4874A8/95
T4	Aerial coil, 1.5-3.1 Mc/s.	6770A3/92
T5	R.F. coil, 100-250 Kc/s.	4874A8/97
T6	R.F. coil, 240-700 Kc/s.	4874A8/97
T7	R.F. coil, 600-1,700 Kc/s.	4874A8/94
T8	R.F. coil, 1.5-3.1 Mc/s.	6770A3/93
T9	Oscillator coil, 100-250 Kc/s.	4874A8/96
T10	Oscillator coil, 240-700 Kc/s.	5874A8/96
T11	Oscillator coil, 600-1700 Kc/s.	4874A8/93

SECTION 5 (Contd.)

Circ.Ref. No.	Description	Purpose	A.W.A. Type No. (unless otherwise stated)
T12	Oscillator coil, 1.5-3.1 Mc/s.		6940A2/168
T13	I.F. Transformer		4874A9/100
T14	I.F. Transformer		4874A9/100
T15	Heterodyne Oscillator coil		4874A9/102
T16	Output Transformer		1TX14121

(f) NOTE: A pilot lamp (6.3V 0.25A, M.E.S., code 428105) may be supplied if so specified.

Crystal Receiver type 2C51562

C1	100 μμF, variable	2U8315
C2	2,000 μμF, 500V.W., mica	13213 ✱
L1	Tuning coil	1826
X1	Crystal detector	"Ebro"

✱ Quote details under "Description" as well as type number, when ordering.

6. EQUIPMENT SCHEDULE

Item 1. One A.W.A. 6 Valve Superheterodyne Receiver type 1C6940 or 5C6940 (with Crystal Receiver type 2C1562) complete in metal case.

Item 2. Valves required for Item 1 as follows:-

1 Radiotron Type 6G8-G

1 Radiotron Type 6J8-G

4 Radiotrons Type 6U7-G (1C6940)
or
3 Radiotrons Type 6U7-G (5C6940)

1 Radiotron Type 6V6-G (5C6940 only)

Item 3. One pair Headphones.

Item 4. One Plug (for headphones).

Item 5. Instruction Book No. 1-6940R

NOTE:- This list is a guide to items which compris a normal equipment, but may be varied to su the requirements of each installation.

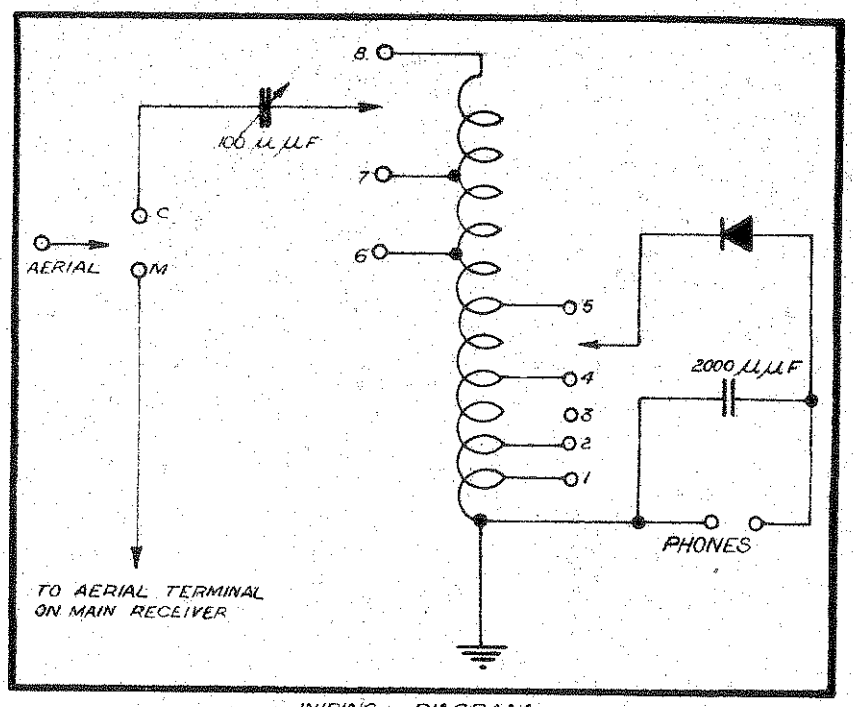

WIRING DIAGRAM

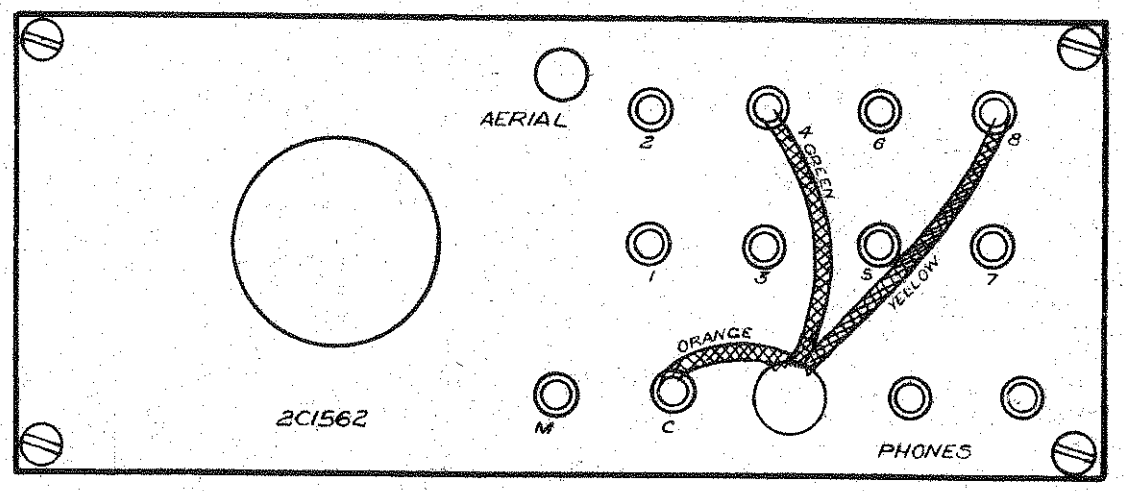

LAYOUT OF PANEL

ADJUSTMENTS	
LEAD	TAP
YELLOW	
GREEN	

EMERGENCY
CRYSTAL RECEIVER C, 2C1562
DRG Nº 1562C1

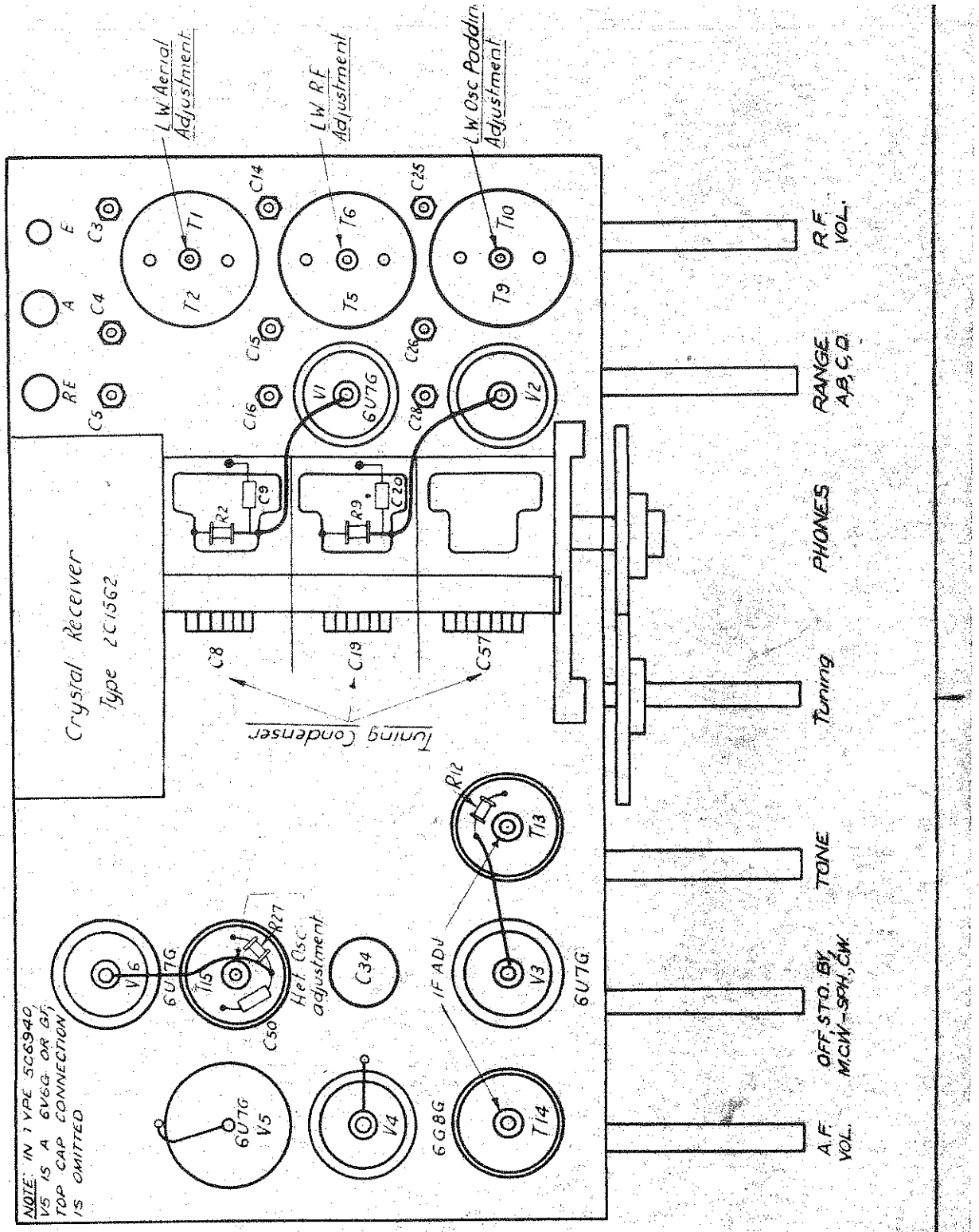

AMALGAMATED WIRELESS (AUSTRALASIA) LTD. — SYDNEY	REF.		1st SHEET REF.
	ARGT.		
LAYOUT OF COMPONENTS. PLAN VIEW	DRN.		TYPE 1,5C6940
	TRCD.	D. I. Wright 18.9.40	
6 VALVE SUPERHETERODYNE MARINE RECEIVER	CKD.		DWG. 6940D4
	APP.		

FORM 109

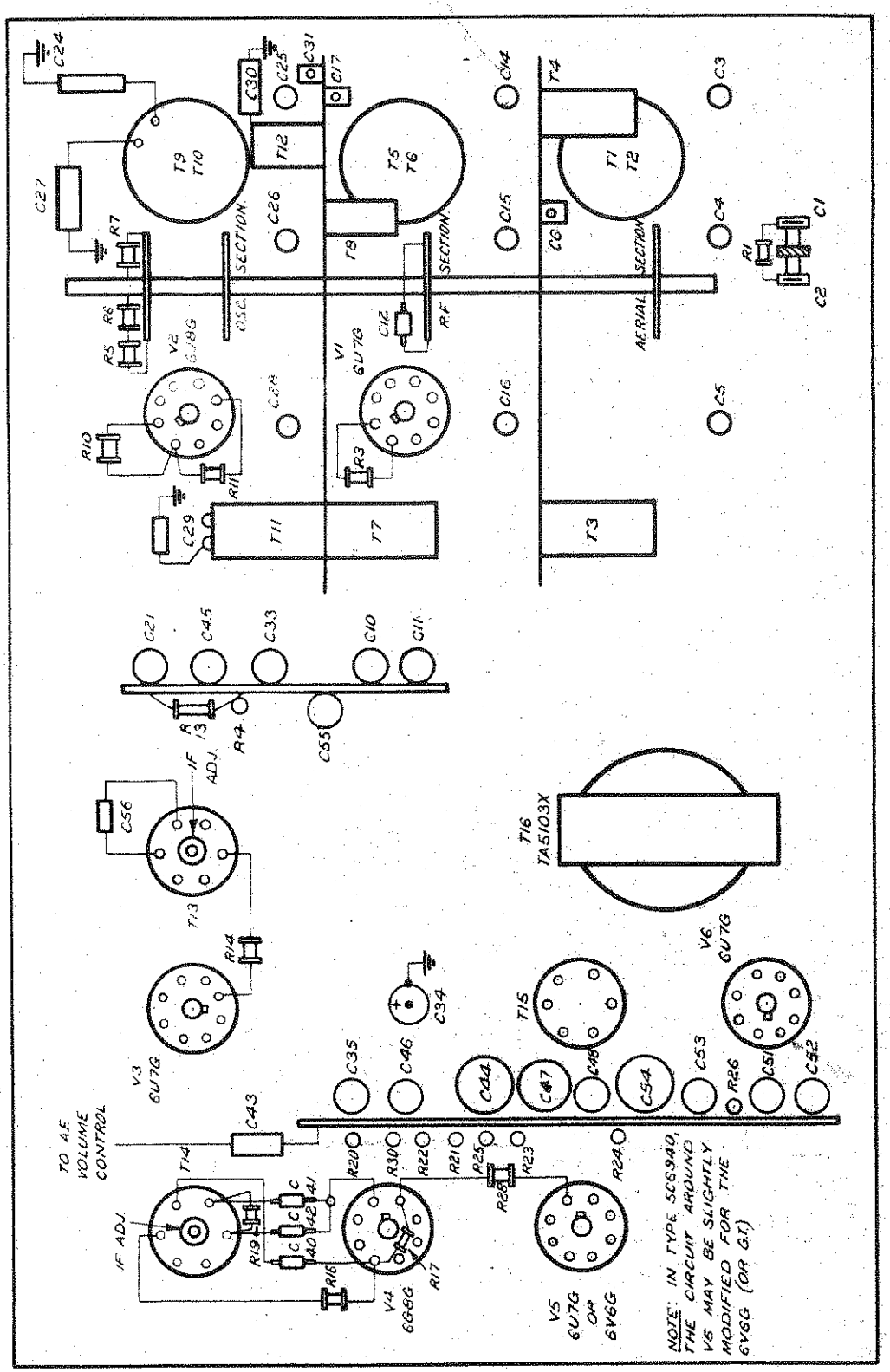

AMALGAMATED WIRELESS (AUSTRALASIA) LTD. - SYDNEY	REF.		1ST SHEET REF.
	ARGT.		
LAYOUT OF COMPONENTS UNDERSIDE VIEW 6 VALVE SUPERHETERODYNE MARINE RECEIVER.	DRN.		TYPE 16,46 & 5C, 6940.
	TRCD.	D.I.Wright	
	CKD.	J.B.Stacy	3-3-40
	APP.	R.R.D.	DRG. 6940D2

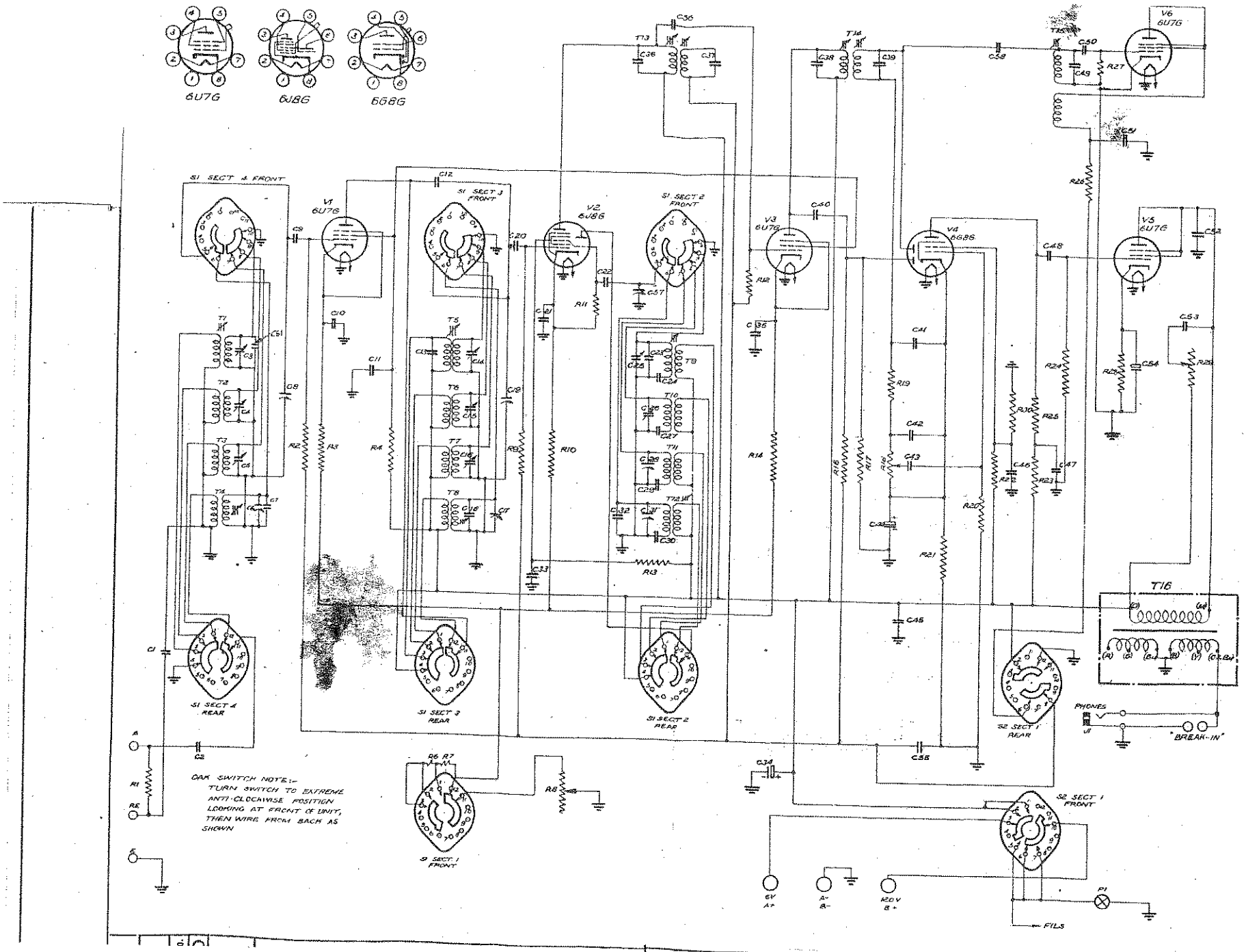

MALGAMATED WIRELESS
USTRALASIA) LTD. - SYDNEY

DIUM WAVE RECEIVER
100K C – 3·1 M C

REF.		1ST SHEET REF.	
ARGT.	J.STABB		
DRN.	W M^cCARTHY 18.10.40		TYPE IG6940
TRCD.	O. WRIGHT 10.10.40		

AMALGAMATED WIRELESS (AUSTRALASIA) LTD. - SYDNEY

SIMPLIFIED SCHEMATIC DIAGRAM.
MEDIUM WAVE RECEIVER.
100 K.C.-3.1M.C.

REF.		
ARGT.	J. STABB.	
DRN.	W. McCARTHY.	2-10-40
TRCD.	D. I. WRIGHT.	2-10-40
CKD.	J. STACY	2-10-40

1ST. SHEET REF.

TYPE IC6940.

DRG. 6940C5.

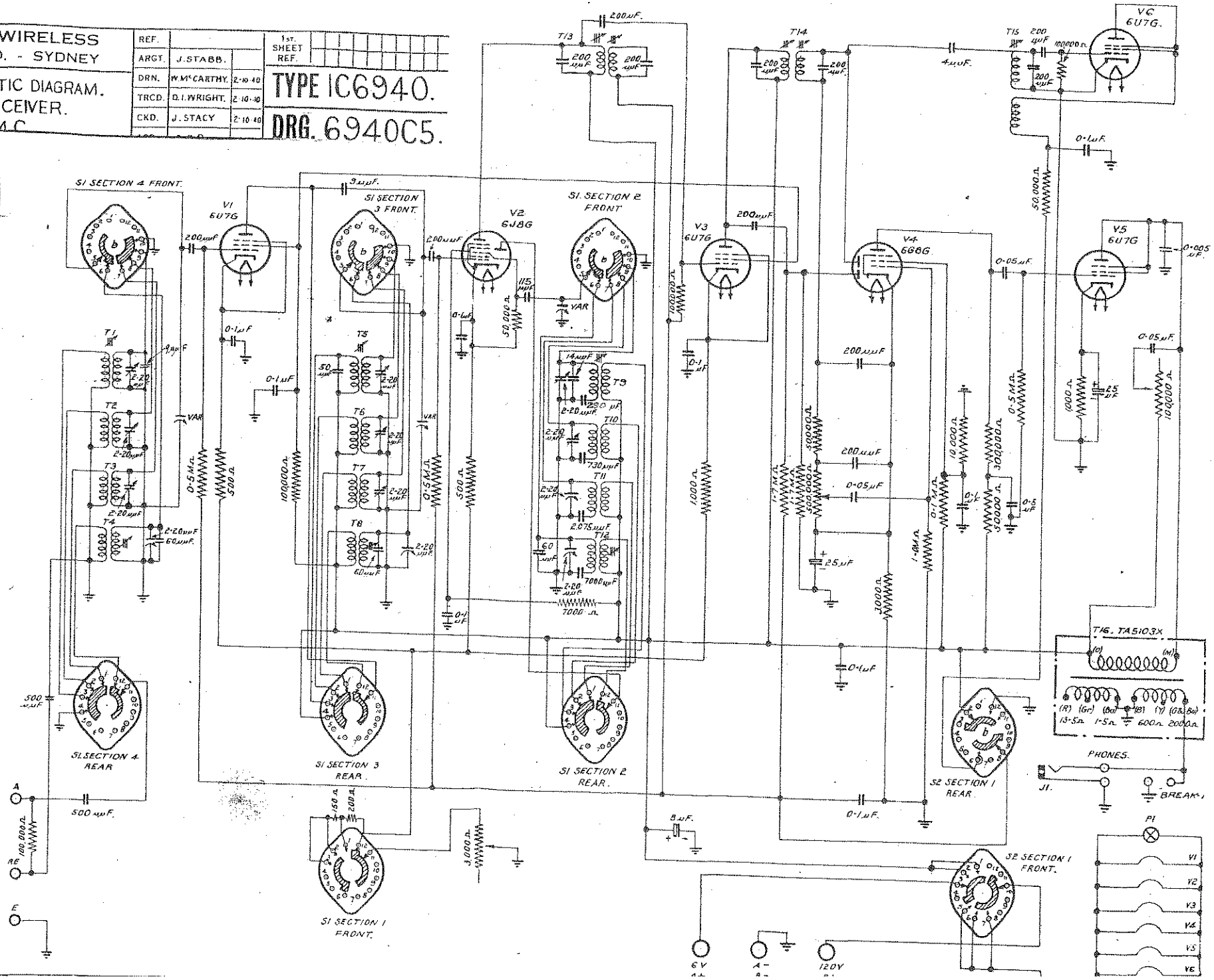

MALGAMATED WIRELESS
USTRALASIA) LTD. - SYDNEY

DIUM WAVE RECEIVER
100K C.-3·1M C.

REF.		1ST SHEET REF.
ARCT.	J. STABB	
DRN.	W. McCARTHY	2/10/40
TRCD.	D.J. WRIGHT	2/10/40
CKD.	J. STACY	2/10/40

TYPE IG6940

DRG. 6940

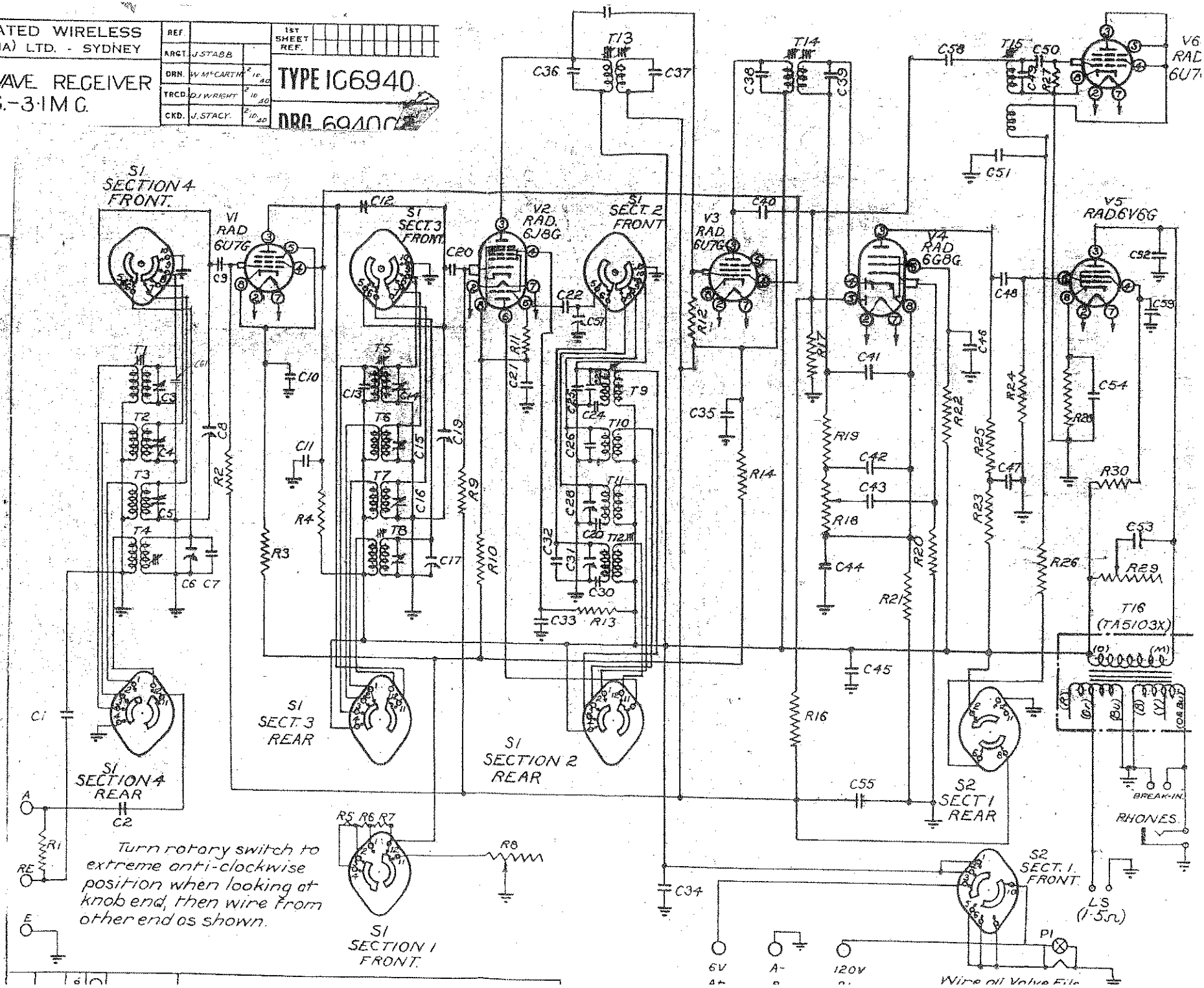

AMALGAMATED WIRELESS
(AUSTRALASIA) LTD. - SYDNEY

SCHEMATIC DIAGRAM
MEDIUM WAVE RECEIVER.
100KC - 3·1MC

REF.			1ST SHEET REF.
ARGT.			
DRN.			
TRCD.			
CKD.			

TYPE 5C6940.

DRG. 6940C9

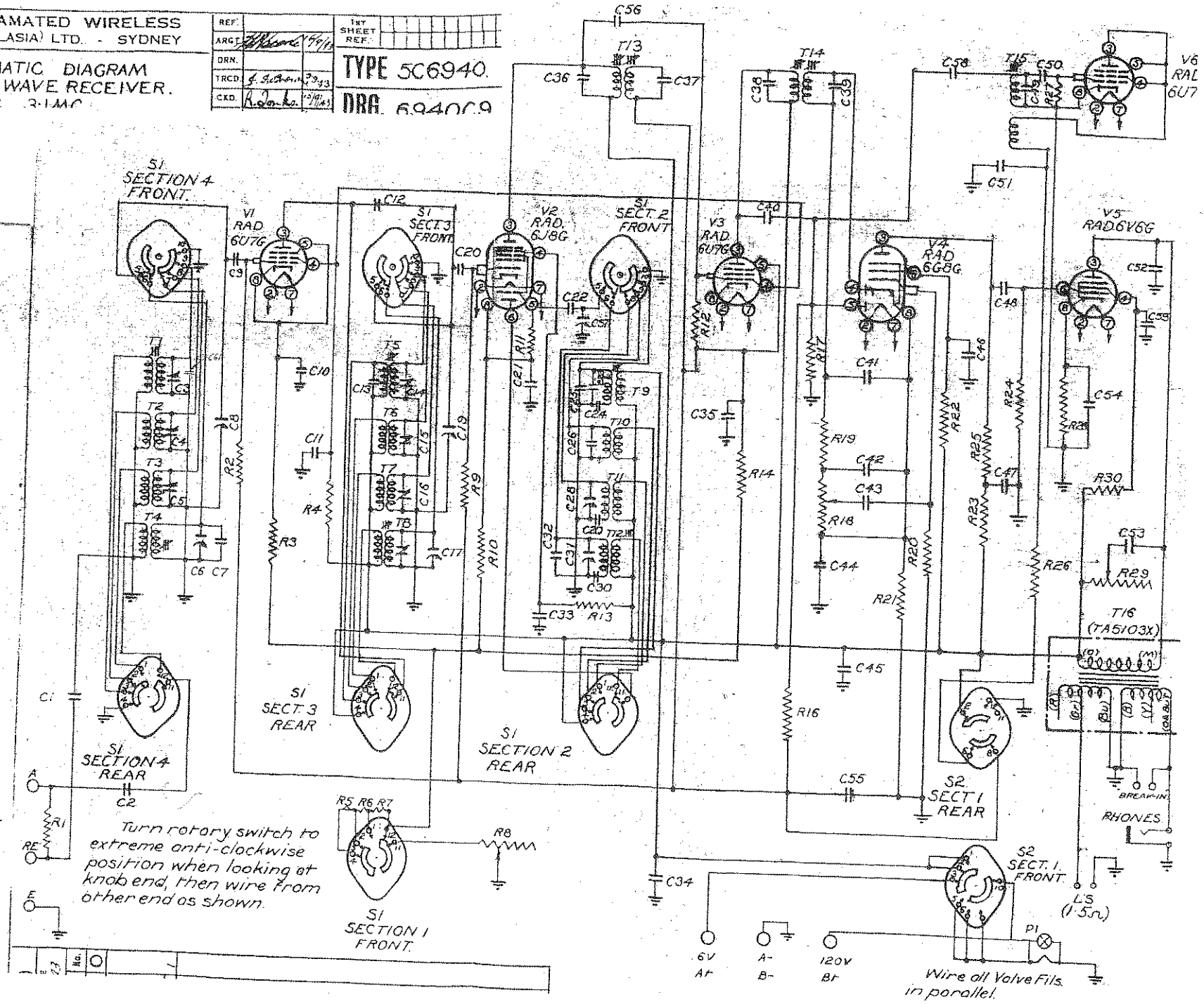

MARCONI SCHOOL OF WIRELESS

COMMUNICATION RECEIVERS (2-1C6940-7C6940)

Receivers supplied with a complete Marine installation (medium and high frequency) are usually a main receiver, consisting of a 6-valve medium wave superheterodyne receiver, a crystal receiver which is built into the same container as the main receiver and a 6-valve short-wave superheterodyne receiver.

MAIN RECEIVER.

The main receiver has four tuning ranges and these are selected by means of a switch operated from the front panel, the wave range covered by each set of coils is as follows-

(a)	3000 - 1500 Kc/s.	100-200 Metres.
(b)	1700 - 600 Kc/s.	175-500 Metres.
(c)	665 - 230 Kc/s.	450-1300 Metres.
(d)	260 - 100 Kc/s.	1150-3000 Metres.

Tuning is by means of a 3 gang single control variable condenser and this is operated through a two speed vernier drive giving both direct drive and 54-1 vernier. Power supplies are obtained from a 6 v. L.T. battery and a 120 v. H.T. battery, both of the lead-acid type.

The If used is 95 Kc/s and the amplifier is designed to pass a comparatively wide band. The r-f and i-f transformers are of the iron-cored type.

The output transformer is tapped to give four output impedances, 1.5, 13.5, 600 and 2000 ohms. The 2000-ohm output is intended for high impedance 'phones and is connected to the 'phone jack on the front panel. The 600-ohm winding is intended for low impedance phones or for connection to a line, while the low impedance windings are intended for loudspeaker operation. For standard Marine installation only the 2000-ohm winding is connected. The other output connections, if required, are brought to terminals at the rear of the chassis.

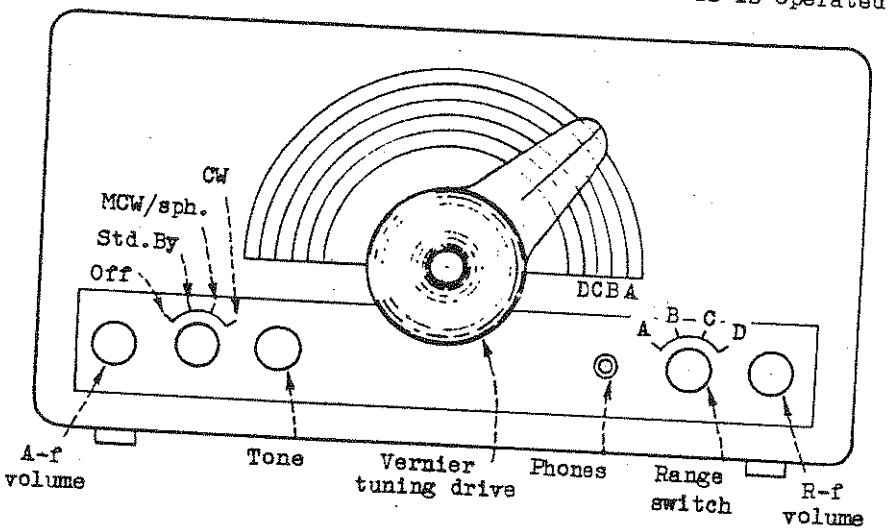

Fig.1.

A simplified circuit diagram of the receiver is shown in Fig.2. while Fig.1 shows a front panel view. The controls shown in Fig.1, reading from left to right are-

A-f Volume Control. This is connected as the diode load resistor and controls the input to the a-f amplifier.

ON-OFF Switch. This switch has four positions.

(a) OFF.

(b) STAND-BY. In this position the heaters are in operation, but the H.T. is disconnected. The receiver is then quietened, but ready for immediate operation. This switch position is used during transmission.

(c) MCW-SPEECH. The receiver operates normally in this position with the A.V.C. on but the heterodyne oscillator disconnected.

(d) CW. In this position the A.V.C. is removed and the heterodyne oscillator is brought into operation.

Tone Control. This is a variable resistor in series with a condenser across the load of the output valve. It may be used with advantage to reduce the noise level on weak signals.

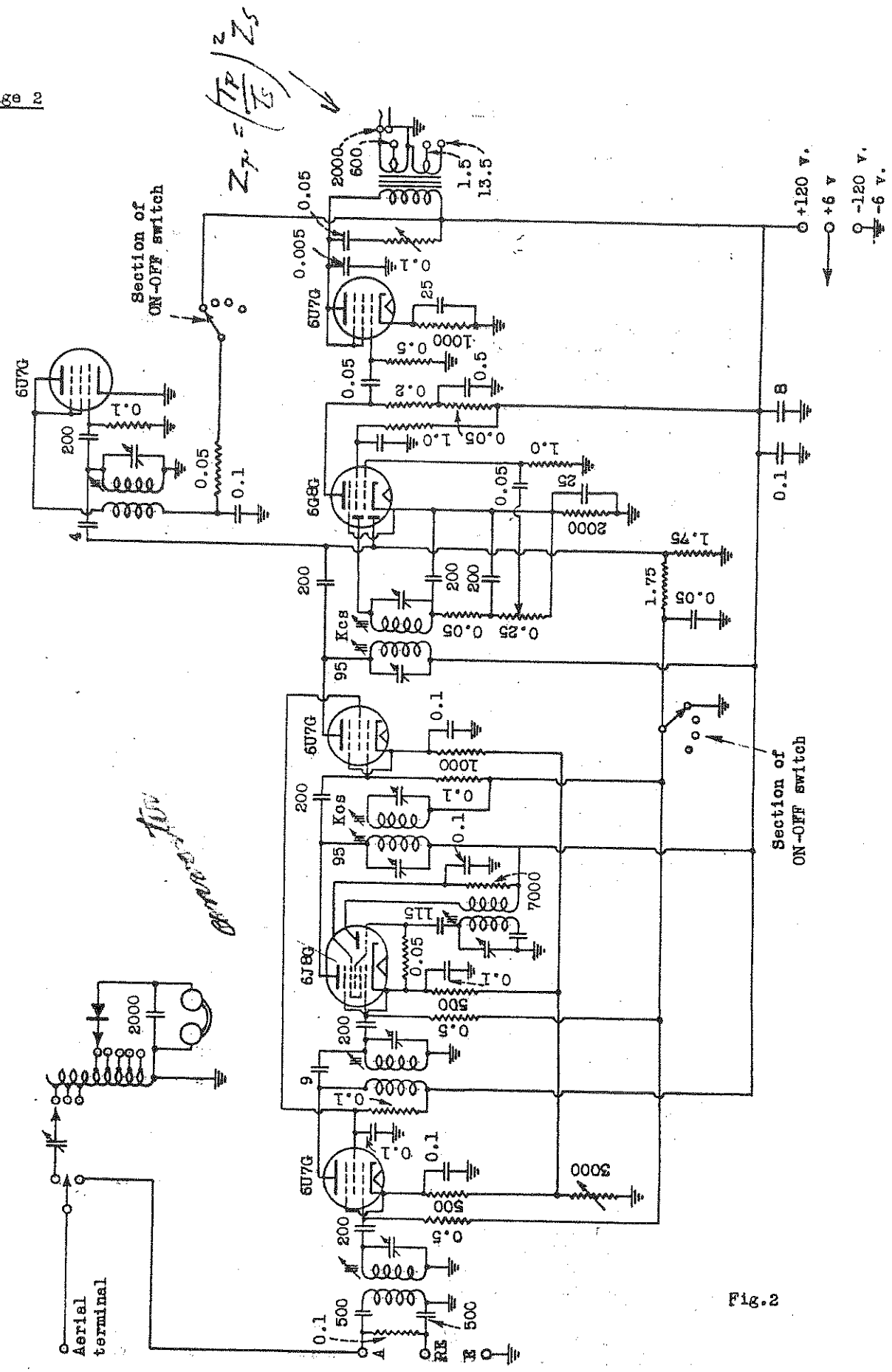
Section of ON-OFF switch
6U7G
6G8G
6J8G
Kos
Kcs
Aerial terminal
+120 v.
+6 v.
-120 v.
-6 v.
Section of ON-OFF switch

Fig.2

Phones Jack. Headphones are plugged into this jack.

Range Switch. This switch selects any one of the four ranges already mentioned.

R-f Volume Control. This is a variable resistor in the common cathode circuit of r-f amplifier, frequency changer and i-f amplifier valves, and controls the bias and hence the gain of these stages.

Operation.

Turn the ON-OFF switch to either "M.C.W. SPEECH" or "C.W." according to the type of signal it is desired to receive. An interval of about 30 seconds should be allowed to give the valves to reach their normal operating temperature. Signals or noise should now be heard. Set the range switch to the range which includes the frequency of the station it is desired to receive and adjust the tuning control so that the pointer indicates approximately the frequency of the station. Now swing the tuning dial a few degrees either side of this setting, using the vernier or outer portion of the tuning knob and, at the same time, adjust the volume control so that the signals are heard at low volume.

If RT or MCW signals are being received, adjust the tuning knob to a position midway between the points where the signals disappear and adjust the audio volume control to the desired level.

If CW signals are being received, adjust the tuning knob to that position which gives the most readable note with least interference and adjust the r-f volume control until the desired level is obtained. It is necessary for CW reception that the a-f volume control be kept near the maximum position, all adjustments being made by the r-f control. If the a-f control is used to reduce the volume of strong CW signals while the r-f control is set near the maximum position, insufficient modulation will be obtained from the heterodyne oscillator to give a good readable signal.

For 'phone reception, the r-f control may be used to reduce noise when tuning between stations. Adjust the control while not tuned to a station to the point at which excessive noise disappears. 'Phone stations above this level may now be tuned in, in the normal manner, while noise between stations will remain at a reasonable level.

CRYSTAL RECEIVER.

The crystal receiver (which is intended for emergency use on 500 kcs only) is mounted on the chassis of the medium wave superheterodyne receiver, generally referred to as the "Main" receiver. The circuit diagram is included in Fig.2 and the panel view is given in Fig.3.

It will be noted from Fig.2 that this unit is a complete receiver, being tuned by an aerial condenser and an aerial tuning coil. The coil has eight tappings, Nos.1 to 5 being on the crystal taps and 6 to 8 on the aerial taps.

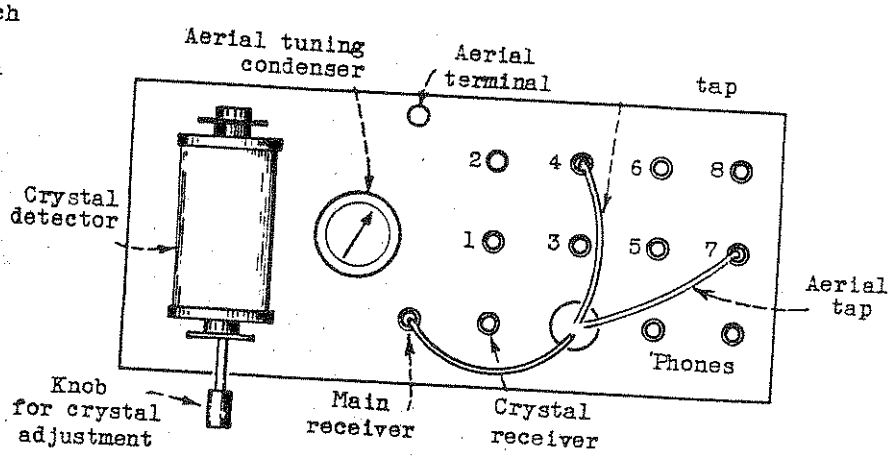

Fig.3.

The best adjustment of aerial and crystal taps and of the tuning condenser may be found by trial but should normally be marked by the installing engineer, and the leads left in that position, any minor adjustment in tuning required during use being effected by varying the aerial condenser. The crystal should be adjusted by withdrawing the plunger slightly, rotating it and allowing it to return gently. This should be repeated until the loudest signals are heard, care being taken not to grind the crystal surfaces together.

The aerial should at all times be left connected to the aerial terminal on the crystal receiver and fed to the main or crystal receiver as required, by plugging the flexible lead provided into the socket marked "main receiver" or "crystal receiver" respectively.

When using the crystal receiver, headphones, (the cords of which should be fitted with

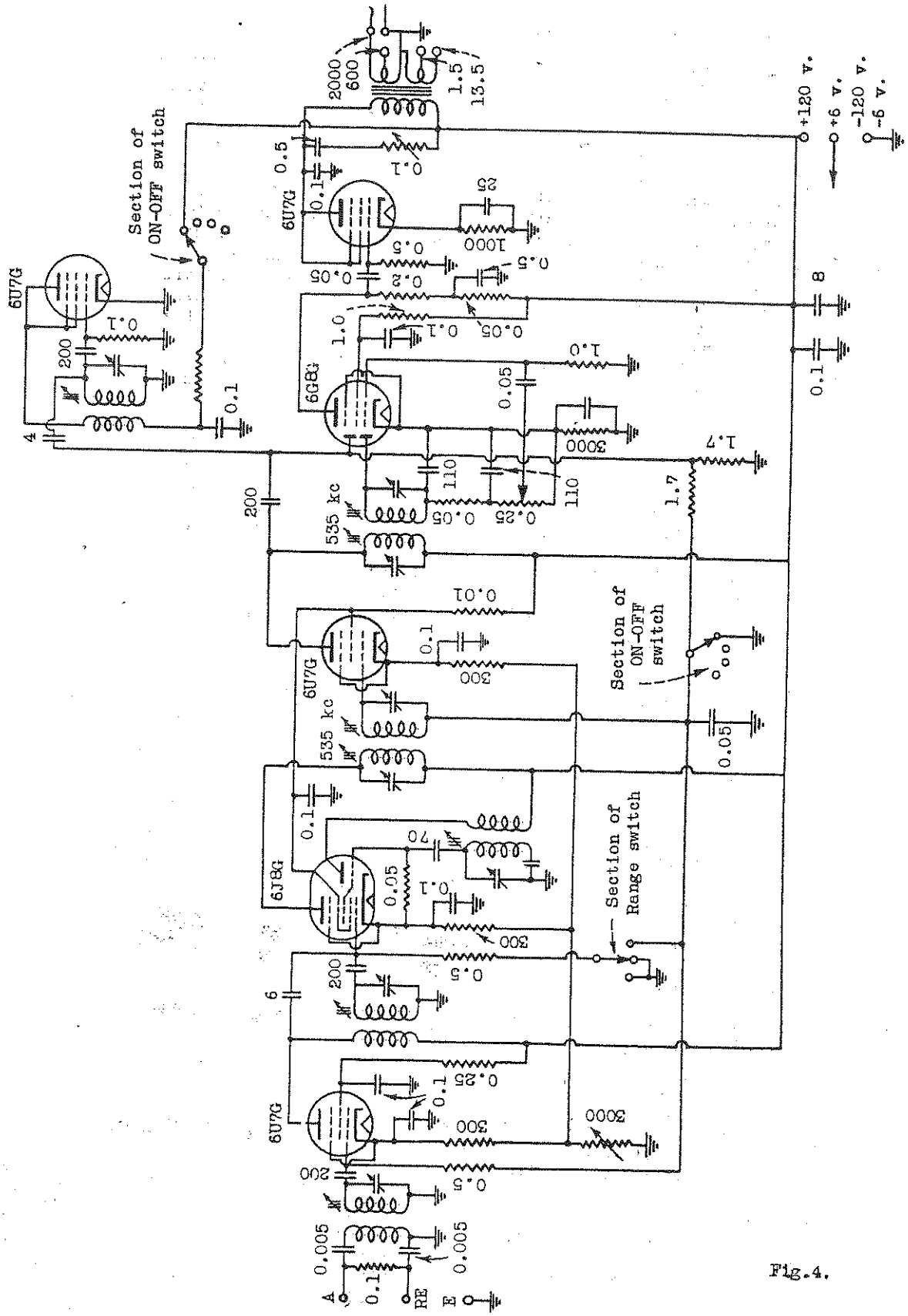
6U7G
6U7G
6U7G
6U7G
6J8G
6G8G
Section of ON-OFF switch
Section of ON-OFF switch
Section of Range switch
535 kc
535 kc
+120 v.
-120 v.
+6 v.
-6 v.
A
RE
E

Fig.4.

R.

"tips",) must be plugged into the sockets marked "phones".

SHORT WAVE RECEIVER.

This receiver, like the medium wave receiver, is intended for Marine communication purposes and is similar to it in many respects. The main difference is in the frequency range, which in the case of the short wave receiver is from 26 mc to 1.5 mc, covered in three ranges as follows-

Band A	26 - 9 mc.
Band B	9 - 3 mc.
Band C	3 - 1.5 mc.

A simplified circuit diagram is given in Fig.4 and a front panel view in Fig.5. Range switching has been omitted from Fig.4 with the exception of that section which removes the AVC from the frequency changer valve on the two ranges of highest frequency. The If is 535 kc.

The operating instructions are the same as for the medium frequency receiver except that there is no crystal unit.

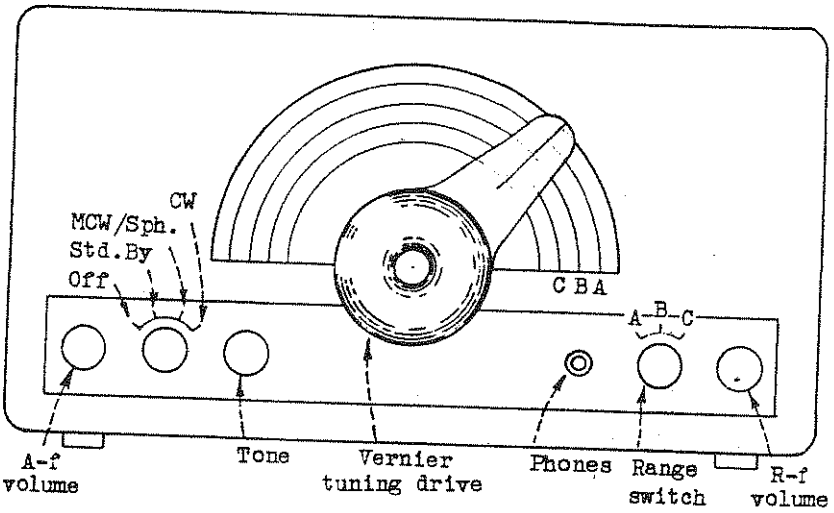

Fig.5.

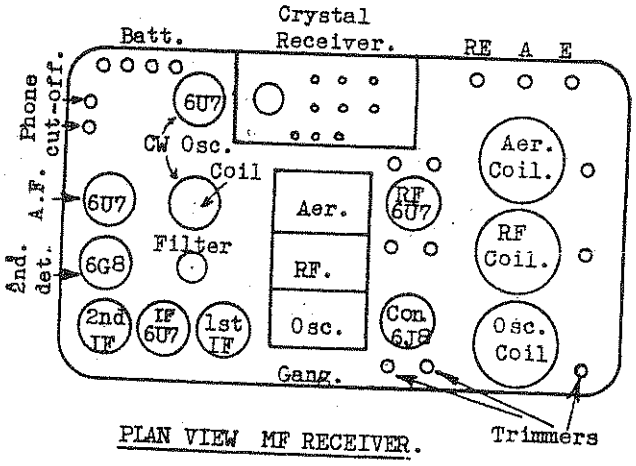

PLAN VIEW MF RECEIVER.

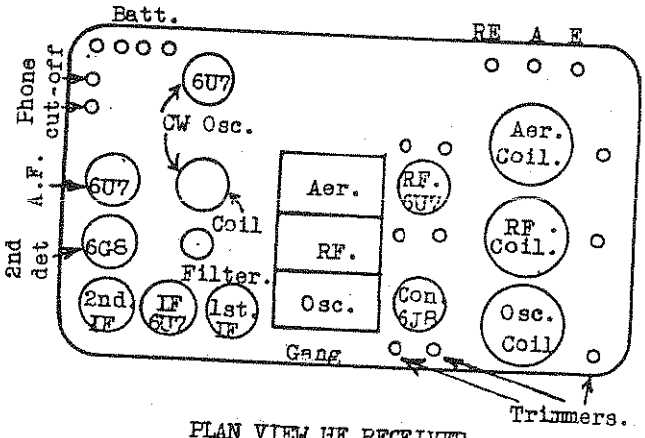

PLAN VIEW HF RECEIVER.