Circulating Current Detector (Figure 45, Figure 1005)

277. The Circulating Current Detector instigates a reduction in the power input to the HF ATU, if the circulating currents in Module 4's inductors and capacitors exceed 7 A.

278. Circulating currents are routed via T5, which has a turns ratio calculated to give a voltage greater than +2.5 V on IC6A-3, should the circulating currents exceed 7 A. The secondary current is rectified by D28 and a voltage developed across the load resistor R58. This is applied to IC6A-3, via R57.

279. A reference voltage of +2.5 V, derived from the 12 V supply and the voltage divider network R49 and R53, is applied to IC6A-2. If the voltage at IC6A-3 exceeds this reference voltage, IC6A-1 will be a logic 1. The logic 1 is routed to the microprocessor control circuits on Module 3 (via 4PL2-5), initiating a reduction in the input power to the HF ATU.

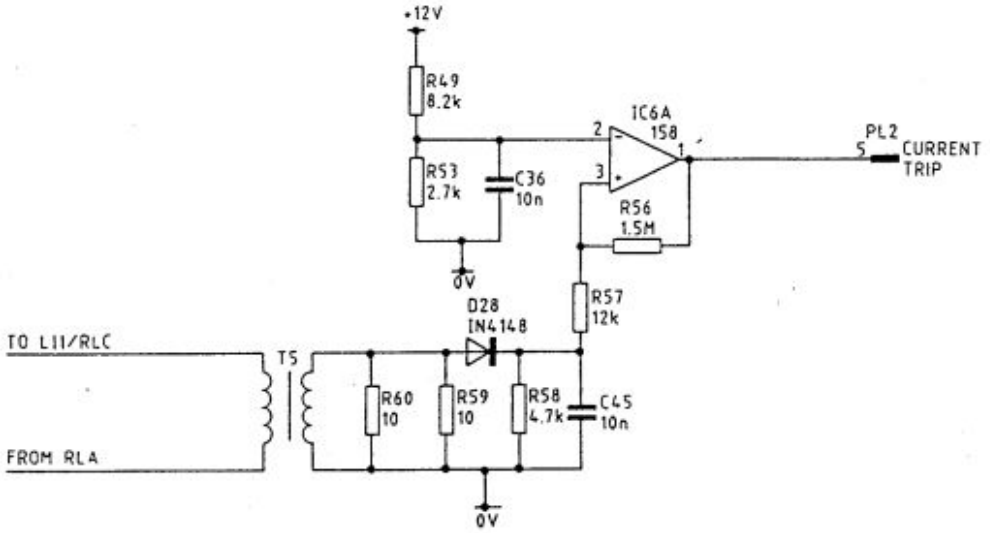

FIGURE 45 - CIRCULATING CURRENT DETECTOR CIRCUIT

Fine Tuning Inductor and Capacitor Selection (Figure 46, Figure 47, Figure 1005)

280. The Fine Tuning Inductor and Capacitor Selection on Module 4 comprises small value inductors L10 to L13 and shunt capacitors C4 to C9 and C47. Any of these components can be shorted out or inserted into the required tuning circuit by relays under microprocessor (Module 3) control.

281. As shown at Figure 1005, the RF comes into Module 4 at 4PL1, to relay RLA via the primary of T1, through RLA contacts (when energised) and to the primary of T5. From T5, the RF passes through the selected inductors and out to Module 5 via 4PL3. The RF is also routed (via 4PL4) to shunt capacitors accommodated on Module 5, which also form part of the fine tuning circuitry and can be switched in parallel with the shunt capacitors on Module 4 if required.

282. The two types of relay drive circuits employed in this module, generate different amounts of drive current.

Large Current Relays. (Figure 46)

283. Because of the small inductance of the fine tuning inductors, the distance between the relay contacts must be physically small. Relays of this type require larger than normal driving currents, and to supply this extra current, transistor drivers are used. RLC, RLD and RLE are large current relays, and are associated with L11, L12 and L13 respectively. Figure 46 shows the circuitry of RLC and L11.

284. The microprocessor on Module 3 selects L11 by removing the 0 V from PL2-15, which effectively makes pin 15 an open circuit, causing the +19 V supply to produce an avalanche current through pull-up resistor R46, zener diode D32 and R101. The resultant voltage on TR1 base will switch it on and its collector will fall to 0 V, which is then applied to one side of RLC windings, causing it to energise, removing the short circuit across L11.

285. When the relay is de-energised, D10 prevents any large reverse voltages being induced due to the collapse of the magnetic field around the relay coil.

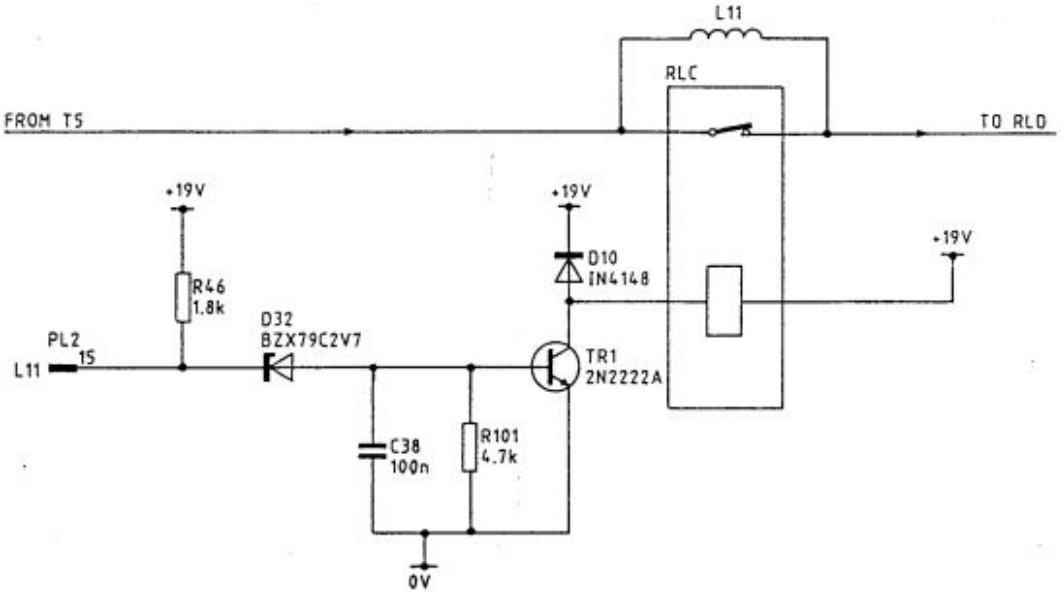

FIGURE 46 - LARGE CURRENT RELAY DRIVE CIRCUIT

Small Current Relays. (Figure 47)

286. All relays in Module 4 except RLC, RLD and RLE are of the small current type, and are listed in Table 16 together with their associated tuning components. Figure 47 shows the circuitry for RLJ and shunt capacitor C6. RLJ is shown de-energised.

TABLE 16 - RELAY/COMPONENT SELECTION TABLE

RELAY	COMPONENT
RLF	L10
RLH	C4
RLJ	C6
RLK	C9
RLL	C8
RLM	C7
RLP	C5,C47

287. The microprocessor on Module 3 selects shunt capacitor C6 by putting 0 V on one side of RLJ winding, causing the relay to energise and connect the capacitor to the RF line. The 0 V comes in at 4PL2-16.

288. Resistor R95 limits the drive current to RLJ, while C46 decouples any stray RF. When RLJ is de-energised, D17 prevents any large reverse voltages being induced by the collapsing magnetic field of the relay windings.

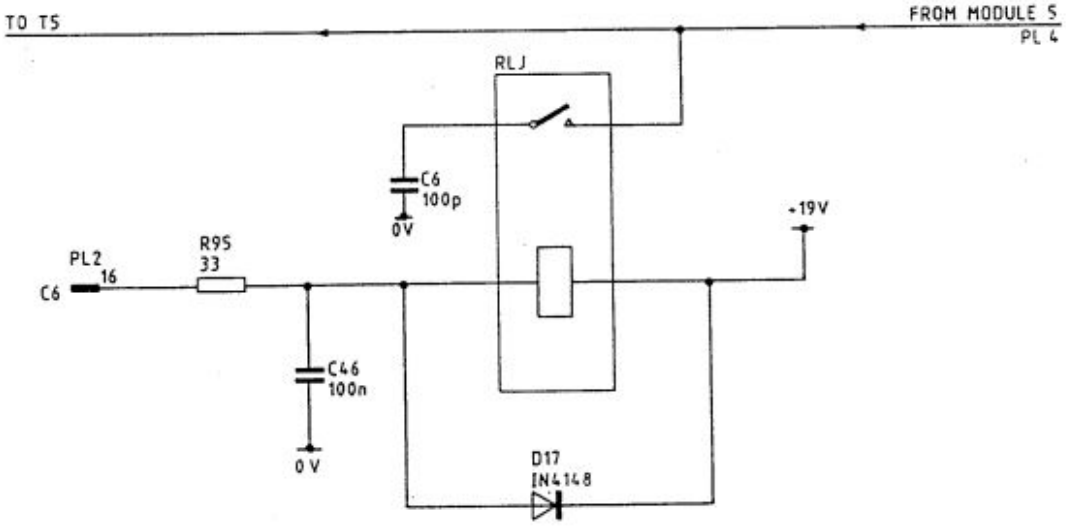

FIGURE 47 - SMALL CURRENT RELAY DRIVE CIRCUIT

Module Voltage Supplies (Figure 1005)

289. As shown at Figure 1005, Module 4 voltages are supplied from Module 3. These voltages are 0 V, +10 V, +12 V and +19 V supplied via 4PL2 on pins 1, 2, 3 and 4 respectively.

290. Low-pass filtering is provided on the +19 V line by L4, C48, C12, C37 and C58, while R5 provides current limiting for zener diode D25, which itself provides a +10 V continuous supply from the +19 V line. The +10 V (SWD) supply is only applied to IC3A, IC3B (conductance and phase detector circuitry) and IC4A (antenna dc resistance comparator) during a tuning sequence.

291. When 4PL2 is disconnected from Module 4, 0 V is removed from 3PL5-3 which initiates the BITE routine on Module 3.

MODULE 5 - RF MATCHING BOARD

General

292. Module 5 is a panel electronic circuit providing the middle section of the HF ATU matching network tuning circuitry. The module houses four inductors L6, L7, L8, and L9 mounted on heat sinks, and four associated relays RLD, RLC, RLB and RLA. Any or all of these series inductors may be shorted out as required to make up an inductance which, in conjunction with the other sections of HF ATU tuning circuitry on Modules 4 and 6, will achieve optimum antenna matching.

293. If the load represented by the antenna is too inductive, the HF ATU will be unable to tune to a satisfactory matching network. Therefore some of the inductive reactance of the load is negated by switching into circuit the Line Shortening Capacitors (LSC), these are C5 to C8. The LSC are switched in or out by relays RLE and RLF.

294. A further three groups of shunt capacitors (C1:C2, C3:C18, C19 to C22), plus their associated relays (RLG, RLH and RLI), are accommodated on Module 5. These are in parallel with the tuned circuit shunt capacitors on Module 4 as shown on the functional block diagram (Figure 48). All relays on Module 5 (Figure 1006) are shown de-energised and are selected and driven by the microprocessor control circuits on Module 3.

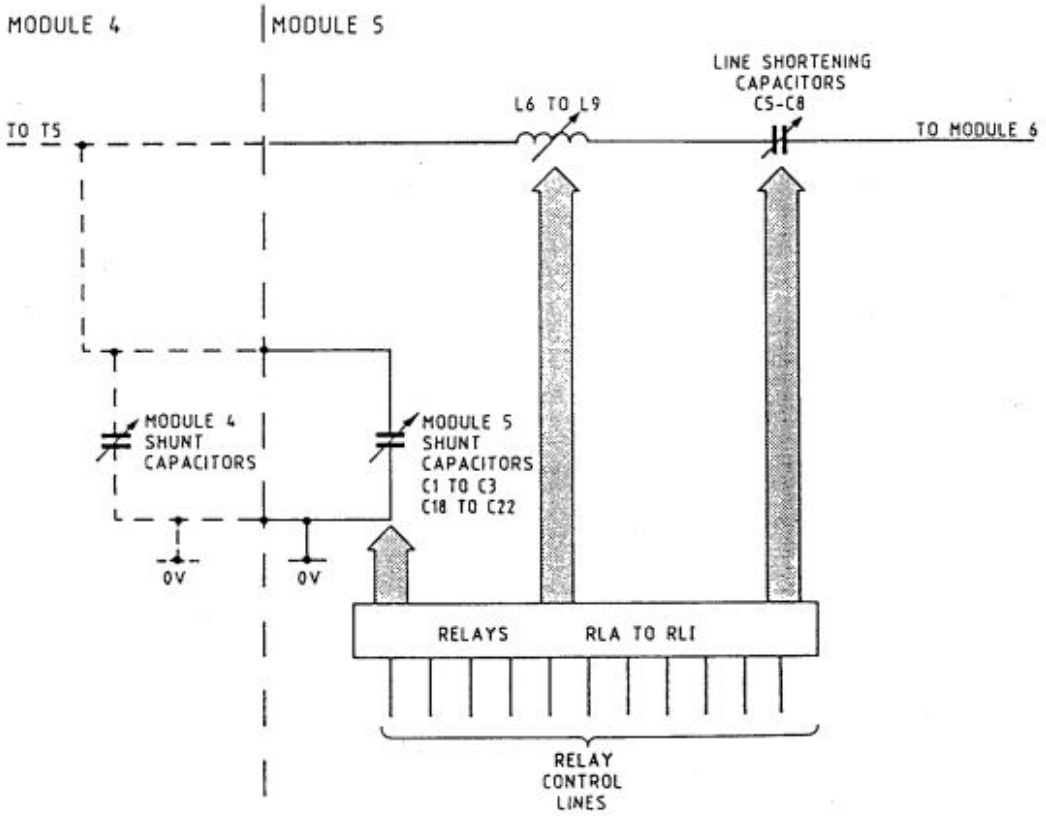

FIGURE 48 - MODULE 5 FUNCTIONAL BLOCK DIAGRAM

Circuit Description (Figure 1006)

295. Each relay on Module 5 is supplied with 19 V from 5PL3-14 via RF filter network L1 and shunt capacitors C4, C23, C24 and C25. Diodes D1 to D9 protect the relay control input lines by short-circuiting any voltage caused by the collapsing magnetic field around the relay coils when an energised relay is de-energised.

296. RF from Module 4 is fed in at 5PL1 to inductor L9 and a contact of RLA, and when RLA is energised (by a low from the microprocessor) on the relay control input line (PL3-11), the inductor is shorted out. Each of the inductors and the line shortening capacitors can be shorted out as required in a similar manner by a low on the appropriate relay control input line. All relay control lines are individually RF decoupled by 100n capacitors (C9 to C17).

297. Shunt capacitors C1 to C3 and C18 to C22 are in parallel, via 5PL2, with other shunt capacitors on Module 4, and can be connected to the RF line as required, by relays RLG, RLH and RLI.

298. The RF output from Module 5 to Module 6 is via tag strip 5TS1.

MODULE 6 - RF MATCHING BOARD

General

299. Module 6 provides the final section of the HF ATU RF tuning circuitry and comprises one panel electronic circuit and various components mounted on a metal casting.

300. The tuning circuitry of Module 6 consists of five inductors connected in series, and five Broadband Shunt Capacitors. Any or all of the inductors may be shorted out (by relays) to obtain the necessary inductance, which together with the required Broadband Shunt Capacitors (also selected by relays), forms a tuned circuit to achieve optimum antenna matching. All relay switching is controlled by the Microprocessor on Module 3.

301. A detailed circuit diagram of Module 6 is shown at Figure 1007 with all relays shown de-energised, and a functional block diagram at Figure 49. With reference to Figure 49, Module 6 may be broken down as follows:

a. Relay circuitry.

b. Relay/Coarse tuning inductor selection.

c. Relay/Broadband shunt capacitor selection.

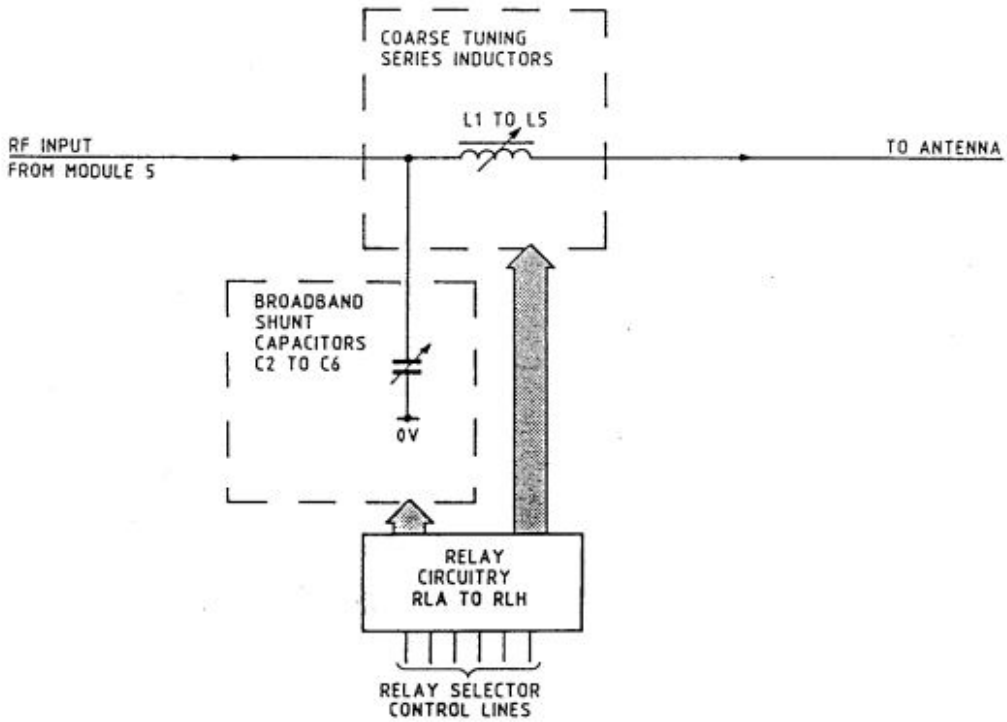

FIGURE 49 - MODULE 6 FUNCTIONAL BLOCK DIAGRAM

Relay Circuitry. (Figure 1007)

302. Eight relays (RLA to RLH) are used to implement the required inductor/capacitor combinations. RLA, RLB, and RLC are connected to a common +19 V supply (6PL2-2) via an RF filter circuit L6 and C1. RLA and RLB are energised by a low on 6PL2-10 (for RLA) and on 6PL2-8 (for RLB), while RLC is energised by a low on 6PL2-4. Diodes D1 to D3 short circuit the reverse voltage caused by the collapsing magnetic field around the relay coils when the energised relays are de-energised.

303. Relays RLD to RLH each have a separate +19 V supply and a separate 'energising' line to their windings.

Relay/Coarse Inductor Selection. (Figure 1007)

304. Inductors L5, L3 and L4 each have their individual shorting relay (RLC, RLD and RLE respectively). Inductors L2 (with or without damping resistors R1 and R2) and L1 can be selected individually or in combination by relays RLF, RLG and RFH.

305. RLF, RLG and RLH can give eight different combinations for L1 and L2 as shown in Table 17.

TABLE 17 - RELAY SWITCHING COMBINATIONS FOR RLF, RLG AND RLH

RELAYS ENERGISED	INDUCTORS IN CIRCUIT
None	L1
RLF only	L2 and L1
RLG only	None (open cct)
RLH only	None (L1, L2 bypassed)
RLF and RLG	L2 (damped by R1,R2) and L1
RLF and RLH	L2
RLG and RLH	None (L1, L2 bypassed)
RLF, RLG and RLH	None (open cct)

Relay/Broadband Shunt Capacitor Selection.

306. The five inductors provide coarse tuning. Broadband Shunt Capacitors are used to provide the fine tuning.

307. There are two groups of shunt capacitors (C4, C5) and (C2, C3, C6) which can be selected by relays RLA and RLB respectively.

TABLE 1001 - COMPONENT SCHEDULE - MULTIWAY FILTER BOARD MODULE 1

PREFIX 1, FIGURE 1002

Circuit Reference	Value	Rating Type & Limit	Circuit Reference	Value	Rating Type & Limit
DIODES					
D1,D2, D4 - D10	43 V	1W Z4B-43	D3	110 V	5 W 1.5KE110CA
CAPACITORS					
C1 - C10	10 nF	100 V ±10% ceramic			
MISCELLANEOUS					
L1- L10		shielding beads	PL1		C2099-14-19-MNO
			PL2		75168-801-14

TABLE 1002 - COMPONENT SCHEDULE - POWER SUPPLY UNIT MODULE 2

PREFIX 2, FIGURE 1003

CAPACITORS

Circuit Reference	Value		Rating	Type & Limit
C1,C2,C9, C20	100	nF	50 V	±10% ceramic
C3,C5,C6, C10,C13, C16,C19	10	nF	100 V	±10% ceramic
C4,C11, C14,C17	1	µF	20 V	±10% elect
C8	100	µF	40 V	±20% elect
C12,C15, C18	1	nF	100 V	±10% ceramic

RESISTORS

Circuit Reference	Value	Rating	Type & Limit
R1,R2	10 Ohm	0.500 W	±2% fixed film
R4	2.2 k Ohm	0.250 W	±2% fixed film
R5	3.9 k Ohm	0.500 W	±2% fixed film
R6,R17, R41,R42	10 k Ohm	0.250 W	±2% fixed film
R7	130k Ohm	0.250 W	±2% fixed film
R8	100k Ohm	0.250 W	±2% fixed film
R9	18 k Ohm	0.250 W	±2% fixed film
R11	2.2 k Ohm	2.500 W	±5% w/wound
R12	24 Ohm	0.250 W	±2% fixed film
R13,R43	7.5 k Ohm	0.250 W	±2% fixed film
R14,R16, R46	100 Ohm	0.250 W	±2% fixed film
R15	470 Ohm	2.500 W	±5% w/wound
R18	500 Ohm	0.500 W	±10% variable
R19	1.5 k Ohm	0.250 W	±2% fixed film
R20,R21	3.9 k Ohm	0.250 W	±2% fixed film
R22	82 Ohm	0.250 W	±2% fixed film
R23,R27, R29,R33, R36	1 k Ohm	0.250 W	±2% fixed film
R24	8.2 Ohm	0.250 W	±2% fixed film
R25,R31	5.6 k Ohm	0.125 W	±0.5% fixed film
R26,R32, R39	2.7 k Ohm	0.125 W	±0.5% fixed film
R28	33 Ohm	0.250 W	±2% fixed film
R30	3.3 Ohm	0.250 W	±2% fixed film
R34,R40	4.7 k Ohm	0.250 W	±2% fixed film
R35	120 Ohm	0.250 W	±2% fixed film
R37	15 Ohm	0.250 W	±2% fixed film
R38	15 k Ohm	0.125 W	±0.5% fixed film
R44,R45	24 k Ohm	0.250 W	±2% fixed film

TABLE 1002 - COMPONENT SCHEDULE - POWER SUPPLY UNIT MODULE 2

PREFIX 2, FIGURE 1003

Circuit Reference	Value	Rating	Type & Limit
DIODES			
D2	36 V	1 W	BZV85C or BZX85C
D4	3. 3 V	0.4 W	BZX79-C3V3
D5	10.0 V	0.4 W	BZX 79-C10
D6,D7,D8	20 mA	0.4 W	HLMP-1300
D9	2.4 V		BZX 79-C2V4
D10	75 V		IN4148
TRANSISTORS			
TR2,TR10, TR12,TR13, TR15,TR16, TR17		0.3 W	BC182B
TR3	150 V		ZVN2115A
TR4			MPSA92
TR5		0.3 W	BC212B
TR6		0.8 W	BSW68A
INTEGRATED CIRCUITS			
IC1-IC3			CA3085AE
INDUCTORS			
L1			RF
L2-L4	10µH		RF
MISCELLANEOUS			
FS2		5 A	Fuse link
LK2,LK3,LK4			Socket Elect 65474-002

TABLE 1003 - COMPONENT SCHEDULE - MICROPROCESSOR BOARD MODULE 3

PREFIX 3, FIGURE 1004

CAPACITORS

Circuit Reference	Value		Rating	Type & Limit
C1,C2, C20,C24 C31,C35, C78 - 93 C95- C113, C115	10	nF	100 V	10% ceramic
C3,C4	33	pF	100V	5%ceramic
C5,C7, C8,C9 C25,C34, C40 - C54, C61 - C77	100	nF	50 V	10% ceramic
C6,C60, C114	1	nF	100 V	10% ceramic
C14,C15,C26, C56	1	µF	50 V	10% fixed plastics
C32	4.7	µF	16 V	10% fixed
C37	1500	µF	6.3 V	+50-10%fixed

INDUCTORS

Circuit Reference	Value		Rating	Type & Limit
L1,L2,L3,L7	10	µH		RF
L4	4.7	µH		RF

TABLE 1003 - COMPONENT SCHEDULE - MICROPROCESSOR BOARD MODULE 3

PREFIX 3, FIGURE 1004

Circuit Reference	Value	Rating	Type & Limit
INTEGRATED CIRCUITS			
IC1			4043B
IC2			SN54S132J
IC3			SN54197J
IC4			LM158J
IC44			
IC5,IC20			4066B
IC6,IC7			LM139F
IC8,IC9, IC10,IC11, IC12, IC16, IC46,			54HC373
IC13,IC14, IC53			BS9450F0001 898-3 or BS9450F 0005 761-3
IC15			L09-1/4609X-
IC17			LM193J 101/709A
IC18,IC33, IC35,IC43, IC52			54HC132

Circuit Reference	Value	Rating	Type &Llimit
IC19,IC45			54HC4040
IC21			CDP1824D
IC22			Eprom
IC23			LM140LAH-12
IC24			CDP1802AD
IC25,IC26			CDP1852D
IC27			4028B
IC28			L09-1/4609X -101/709A
IC29			435704-8
IC30,IC31			54HC11
IC32			54HC00
IC34			54HC04
IC36			BS9450F0001 898-3 or BS9 450F0005761-3
IC37			54HC4053
IC47			4072B
IC48			54HC23

TABLE 1003 - COMPONENT SCHEDULE - MICROPROCESSOR BOARD MODULE 3

PREFIX 3, FIGURE 1004

RESISTORS

Circuit Reference	Value	Rating	Type &Llimit
R1,R2, R29,R63	18 k Ohm	0.250 W	±2% fixed film
R3,R4, R26, R27, R30,R33, R34,R35, R36,R38, R39,R40, R48,R57, R58, R70, R71, R84,R85, R93, R97, R98,R104, R136	10 k Ohm	0.250 W	±2% fixed film
R5,R105	680k Ohm	0.250 W	±2% fixed film
R6,R7	2 k Ohm	0.250 W	±2% fixed film
R8- R12, R44- R46 R53,R54	3.9 k Ohm	0.250 W	±2% fixed film
R14	10 M Ohm	0.250 W	±5% fixed film
R15,R20, R21,R56,R82, R137,R138	1 k Ohm	0.250 W	±2% fixed film
R16	270k Ohm	0.250 W	±2% fixed film
R17,R49, R126	120k Ohm	0.250 W	±2% fixed film
R18	510 Ohm	0.250 W	±2% fixed film
R19	160 Ohm	0.250 W	±2% fixed film

Circuit Reference	Value	Rating	Type &Llimit
R25	560k Ohm	0.250 W	±2% fixed film
R28,R108 - R118, R124	10 Ohm	0.250 W	±2% fixed film
R41,R42, R43,R94	180 Ohm	0.250 W	±2% fixed film
R47	3.3 k Ohm	0.250 W	±2% fixed film
R50,R51, R52,R68, R89,R92	22 k Ohm	0.250 W	±2% fixed film
R55	6.2 k Ohm	0.250 W	±2% fixed film
R59,R65,R87, R103, R106, R125,R139	100k Ohm	0.250 W	±2% fixed film
R61	8.2 k Ohm	0.250 W	±2% fixed film
R62	5 k Ohm	0.500 W	±10.0% variable
R64	12 k Ohm	0.250 W	±2% fixed film
R69	2.7 k Ohm	0.250 W	±2% fixed film
R74-R78	1.8 k Ohm	0.500 W	±2% fixed film
R101	1 M Ohm	0.250 W	±5% fixed film
R102	43 k Ohm	0.250 W	±2% fixed film
R107	7.5 k Ohm	0.250 W	±2% fixed film
R120	470k Ohm	0.250 W	±2% fixed film
R127- R135	33 Ohm	0.250 W	±2% fixed film
R140	100 Ohm	0.250 W	±2% fixed film
R141	56 k Ohm	0.250 W	±2% fixed film

RESTRICTED

TABLE 1003 - COMPONENT SCHEDULE - MICROPROCESSOR BOARD MODULE 3

PREFIX 3, FIGURE 1004

SEMICONDUCTORS

Circuit Reference	Value	Rating	Type &Limit
D1,D2,D3,D7, D11,D12,D13, D14,D15,D23, D24,D25,D32		75 V	1N4148
D8,D9,D16, D19,D27, D30		60 V	BAT83
D10		10 mA	LED Red
D20		10 V	BZX 79-C10
D26		30 V	1N5818
D28,D31		68 V	BZV85C or BZX85C
D29		12 V	BZV85C or BZX85C
TH1		100 V	TO S SF or 5B43

TRANSISTORS

Circuit Reference	Value	Rating	Type Limit
TR1- TR3		0.3 W	BC212B
TR4		0.56 W	2N2369 or 2N2369A
TR5,TR6,TR16 TR18, TR19 TR23-TR40		0.75 W	MPSA13
TR7- TR15 TR20- TR22 TR41- TR45 TR51- TR54 TR57			BC182B
TR46- TR50 TR58,TR59,		0.5 W	2N2222A VN10KE

MISCELLANEOUS

Circuit Reference	Value	Rating	Type Limit
LK1,TP1			
PL7 Lower			Connector 75168-801-06
PL7 Upper			Connector 75168-807-06
XL1			Crystal Unit 4702ZA

RESTRICTED

TABLE 1004 - COMPONENT SCHEDULE - DETECTOR MODULE MODULE 4

PREFIX 4, FIGURE 1005

CAPACITORS

Circuit Reference	Value		Rating	Type & Limit
C1,C17	16	pF		Plastic
C2,C18	130	pF	400 V	±1% mica
C3,C12, C14,C15, C31,C37, C38,C40, C42,C44, C46,C48, C49,C50, C51,C52, C55,C58, C59,C60, C62, C63, C64,C65, C66,C67, C69	100	nF	50 V	±10% ceramic
C4	330	pF	500 V	±5% mica
C5,C47	91	pF	500 V	±5% mica
C6	100	pF	500 V	±5% mica
C7	56	pF	500 V	±5% mica
C8	33	pF	500 V	±5% mica
C9	18	pF	500 V	±5% mica
C10	33	µF	10 V	±10% fixed
C11,C13, C16,C20, C22,C26 C32,C33, C34,C35, C36,C45, C57	10	nF	100 V	±10% ceramic
C19,C24	82	pF	400 V	± 1 pF
C21	80-8	pF	500 V	variable
C23	6.8	pF	400 V	± 0.5 pF
C25,C27	22	nF	100 V	±10% ceramic
C28	10	pF	400 V	±pF

INDUCTORS

Circuit Reference	Value		Rating Type &Limit
L1,L2			RF
L4	33	µH	RF
L5	33	µH	RF
L10			RF
L11			RF
L12			RF
L13			RF

INTEGRATED CIRCUITS

Circuit Reference	Value
IC1 thro IC4 IC6	LM158J

RESTRICTED

TABLE 1004 - COMPONENT SCHEDULE - DETECTOR MODULE MODULE 4

PREFIX 4, FIGURE 1005

RESISTORS

Circuit Reference	Value	Rating	Type & Limit
R1,R34, R38,R43, R45,R89	100 Ohm	0.250 W	±2% fixed film
R2,R3, R7,R8	150 Ohm	0.500 W	±2% fixedfilm
R4,R10	220 Ohm	0.250 W	±2% fixedfilm
R5	680 Ohm	0.250 W	±2% fixedfilm
R32,R33, R62	1 k Ohm	0.250 W	±2% fixedfilm
R6,R78	100k Ohm	0.250 W	±2% fixedfilm
R9	27 k Ohm	0.250 W	±2% fixedfilm
R11,R31, R36,R51, R79,R91	10 k Ohm	0.250 W	±2% fixedfilm
R12, R72	22 k Ohm	0.250 W	±2% fixedfilm
R13,R71	15 k Ohm	0.250 W	±2% fixedfilm
R15,R25 - R28,R50	20 k Ohm	0.250 W	±2% fixedfilm
R16,R17, R40,R41	5.1 k Ohm	0.250 W	±2% fixedfilm
R18,R19, R46	1.8 k Ohm	0.500 W	±2% fixedfilm
R20,R54, R73-R76	5.6 k Ohm	0.500 W	±2% fixedfilm
R21	1.8 k Ohm	0.500 W	±2% fixedfilm
R22	10 M Ohm	0.250 W	±5% fixedfilm

Circuit Reference	Value	Rating	Type & Limit
R23,R24, R56	1.5M Ohm	0.250 W	±2% fixed film
R29	39 Ohm	0.250 W	±2% fixed film
R30	1.5 k Ohm	0.250 W	±2% fixedfilm
R35,R44	150k Ohm	0.250 W	±2% fixedfilm
R37	150 Ohm	0.250 W	±2% fixed film
R39	62 Ohm	0.250 W	±2% fixed film
R42	5 k Ohm	0.500 W	±10% variable
R47	2.7 Ohm	0.250 W	±2% fixed film
R49	8.2 k Ohm	0.125 W	±0.5 % fixed film
R53	2.7 k Ohm	0.125 W	±0.5 % fixed film
R57	12 k Ohm	0.250 W	±2% fixed film
R58	47 k Ohm	0.250 W	±2% fixed film
R59,R60	10 Ohm	1.000 W	±2% fixed film
R61	820 Ohm	0.250 W	±2% fixed film
R63	51 Ohm	2.000 W	±2% fixed film
R64, R101 - R103	4.7 k Ohm	0.250 W	±2% fixed film
R67	3.3 k Ohm	0.250 W	±2%fixed film
R68	4.3 k Ohm	0.250 W	±2% fixed film
R69	3.9 k Ohm	0.250 W	±2% fixed film
R70	33 k Ohm	0.250 W	±2% fixed film
R77	82 Ohm	0.250 W	±2% fixed film
R80	8.2 k Ohm	0.250 W	±2% fixed film
R88	2.2 k Ohm	0.250 W	±2% fixed film
R90	820k Ohm	0.250 W	±2% fixed film
R92 -R100	33 Ohm	0.250 W	±2% fixed film

RESTRICTED

TABLE 1004 - COMPONENT SCHEDULE - DETECTOR MODULE MODULE 4

PREFIX 4, FIGURE 1005

Circuit Reference	Value	Rating	Type & Limit
DIODES			
D1,D2,D26,D30		60 V	BAT83
D3- D13		75 V	1N4148
D15 - D23			
D28,D31			
TRANSISTORS			
TR1 - TR3, TR7			2N2222A
MISCELLANEOUS			
RLA,RLB,RLJ, RLK,RLL,RLM RLN,RLP		18 V	Relay
RLC,RLD,RLE		5 A	Relay
RLF			Reed Relay
RLH			Reed Relay
SG1		5 KA	Arrestor Electrical

Circuit Reference	Value	Rating	type & limit
DIODES			
D24		15 V	BZX 79-C15
D25			BZX 79-C10
D29			BZX 79-C13
D32 - D34			BZX 79-C2V7
TRANSISTORS			
TR4			BC212B
TR6			BC182B
MISCELLANEOUS			
T1			Transformer
T2			Transformer
T3			Transformer
T4			Transformer
T5			Transformer
PL1			Connector 13-02/AU

RESTRICTED

TABLE 1005 - COMPONENT SCHEDULE - RF MATCHING BOARD MODULE 5

PREFIX 5, FIGURE 1006

CAPACITORS

Circuit Reference	Value		Rating	Type & Limit
C1,C2	270	pF	500 V	±5.0% mica
C3, C18 -C20	470	pF	500 V	±5.0% mica
C4,C9, C10- C17, C23- C25	100	nF	50 V	±10.0% ceramic
C5,C6	18	pF	2.5 KV	±5.00% ceramic
C7,C8	91	pF	2.5 KV	± 5.00% ceramic
C21,C22	390	pF	500 V	±5% mica

INDUCTORS

Circuit Reference	Value		Rating	Type & Limit
L1	33	uH		RF
L6A, L7				RF
L6B				RF
L8				RF
L9				RF

MISCELLANEOUS

Circuit Reference	Value		Rating	Type & Limit
RLA - RLF				Reed Relay
RLG - RLI				Reed Relay
D1 - D9				1N4148
PL1,PL2				Connector

RESTRICTED

TABLE 1006 - COMPONENT SCHEDULE - RF MATCHING BOARD MODULE 6

PREFIX 6, FIGURE 1007

Circuit Reference	Value	Rating Type &Limit	Circuit Reference	Value	Rating Type &Limit
CAPACITORS					
C2,C3,C6	68 pF	4 KV ±10% ceramic	C4,C5	18 pF	4 KV ±10% ceramic
RESISTORS					
R1,R2	3 k Ohm	2W ±2% fixedfilm			
MISCELLANEOUS					
RLD,RLE	5 A	RelayVacuum	RLF,RLG		5 ARelay Vacuum
RLH	10 A	Relay Vacuum			

RESTRICTED

PIN	FUNCTION	INPUT/OUTPUT
(r)	N/C	-
(s)	N/C	-
(t)	N/C	-
purple (u)	ALC	OUTPUT
(v)	N/C	-

5.3 DC Input

A pattern 105 14-2P DC INPUT plug situated on the front panel (1PL1).

(a) +28V unregulated
(b) 0V

5.4 RF Inputs and Outputs

BNC Remale connectors situated as follows:

RF Input (1SK4)	Front panel
RF Output (1SK3)	Front panel

6. CONDITIONS OF TEST

6.1 The performance requirements shall be verified at normal room temperature of 20°C ± 5°C. Humidity shall be in the range 45% to 75%.

6.2 The purity of the input signal to the amplifier under test shall be:

(a) Harmonics NGT -40dB relative to the fundamental

(b) Intermodulation products of a frequency separation of 2kHz shall be NGT -50dB relative to either of the two test tones.

(c) Wideband noise in a 3kHz bandwidth, over the frequency range 2-88MHz except within ± 10% of the fundamental and harmonics, shall be:

(1) Wideband noise and spurious emissions test: NGT -140dBc.
(2) All other tests: NGT -90dBm.

(d) Single frequency spurious signals shall be NGT -120dB relative to the wanted output over the range 2-88MHz except within ± 3% of the fundamental and its harmonics.

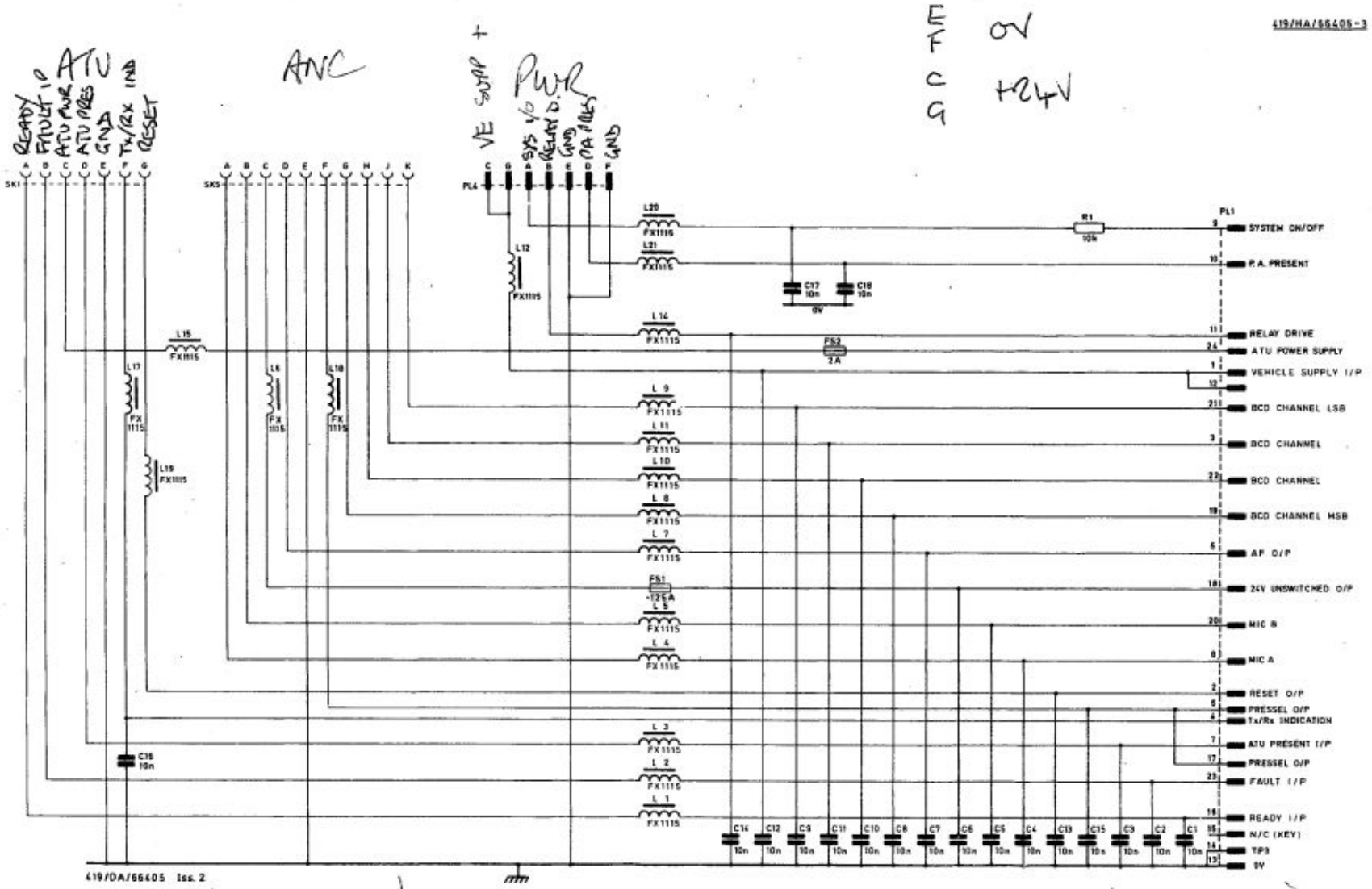

Fig. 1

Oct. 82

Filter board - rear : circuit diagram

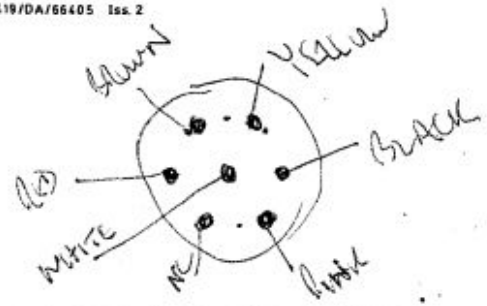

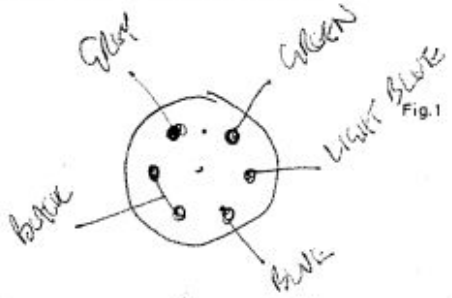

Fig. 1

5. CONNECTIONS

5.1 Control 1 (to ATU)

A pattern 105 14-19 SF control socket is provided on the front panel via which the following inputs and outputs are available (1SK1):-

PIN	FUNCTION	INPUT/OUTPUT
(a)	Ready	INPUT
(b)	Fault	INPUT
(c)	+28V	OUTPUT
(d)	ATU present	INPUT
(e)	0V	-
(f)	Tx/Rx	OUTPUT
(g)	Reset	OUTPUT
(h)	Relay control	OUTPUT
(j)	ATU protection 2	INPUT
(k)	Cositing filter present	OUTPUT
(l)	System on	OUTPUT
(m)	2 Frequency simplex	OUTPUT
(n)	+28V	OUTPUT
(p)	N/C	-
(r)	0V	-
(s)	ATU protection 1	INPUT
(t)	N/C	-
(u)	N/C	-
(v)	N/C	-

5.2 Control 2 (to R/T)

A pattern 105 14-19 P control socket is provided on the front panel via which the following inputs and outputs are available (1PL2).

	PIN	FUNCTION	INPUT/OUTPUT
Brown	(a)	Ready	OUTPUT
Red	(b)	Fault	OUTPUT
	(c)	N/C	-
Pink	(d)	External units present ATU Present.	OUTPUT
Black	(e)	0V	-
Yellow	(f)	Tx/Rx	INPUT
White	(g)	Reset	INPUT
Green	(h)	Relay control	INPUT
Blue	(j)	PA present	OUTPUT
	(k)	Cositing filter present	INPUT
grey	(l)	System on	INPUT
+28V light blue	(m)	~~2 Frequency simplex~~	INPUT
	(n)	N/C	-
orange	(p)	PA control	INPUT

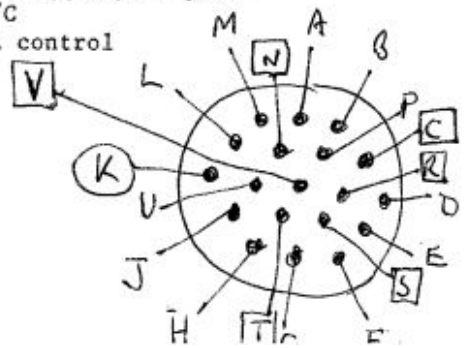

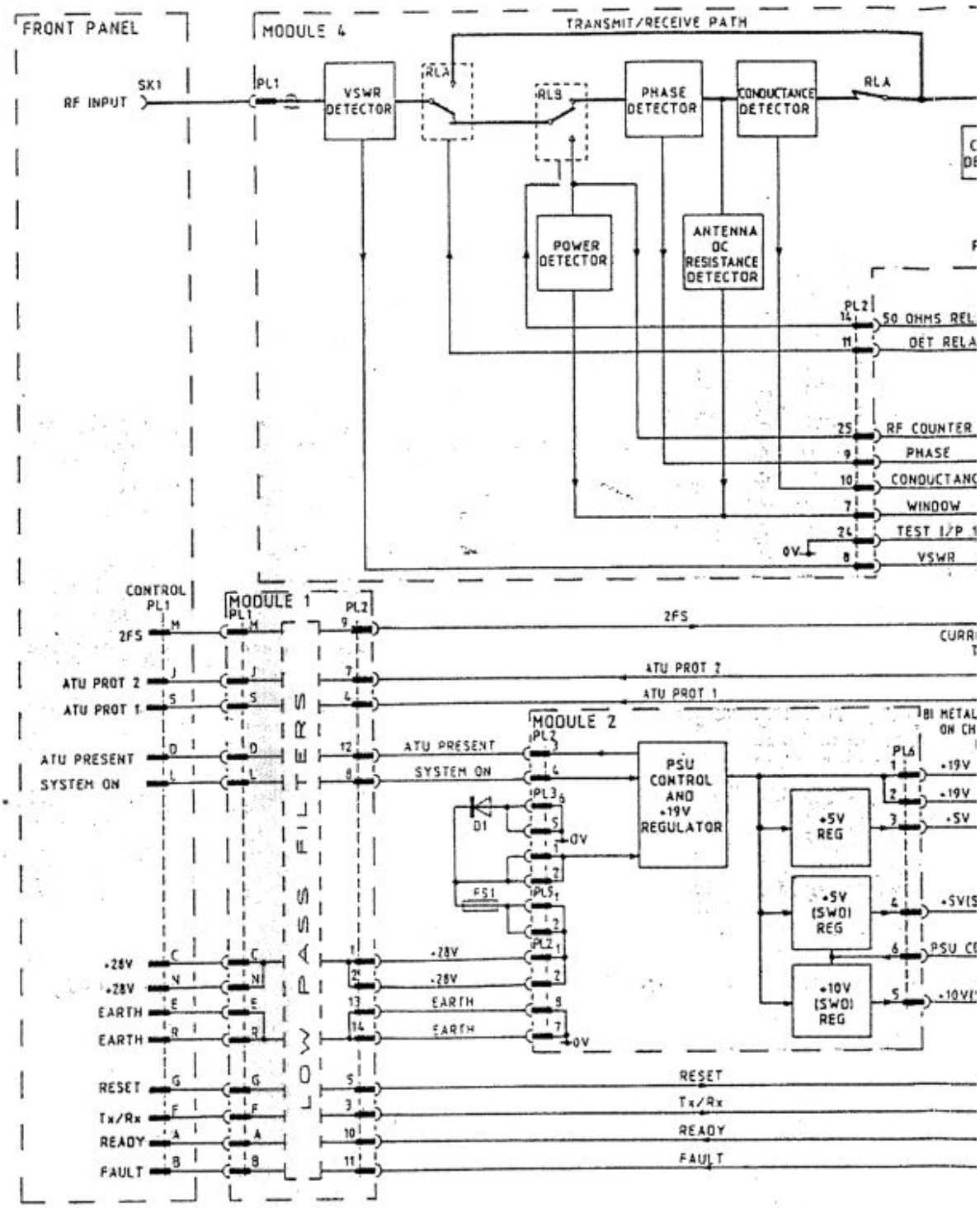

FIGURE 1001 - HF ATU EQUIPMEN

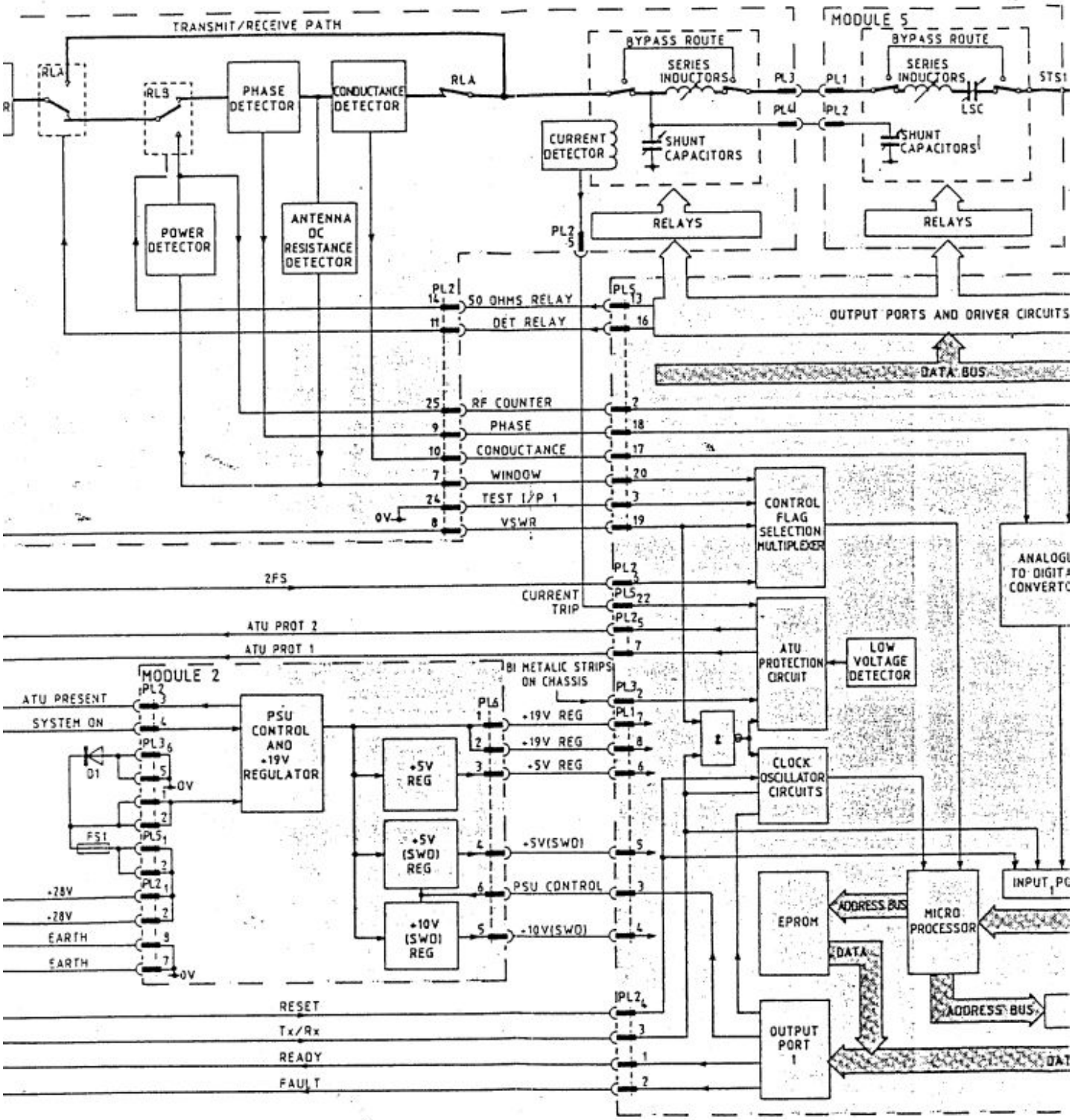

FIGURE 1001 - HF ATU EQUIPMENT FUNCTIONAL BLOCK DIAGRAM

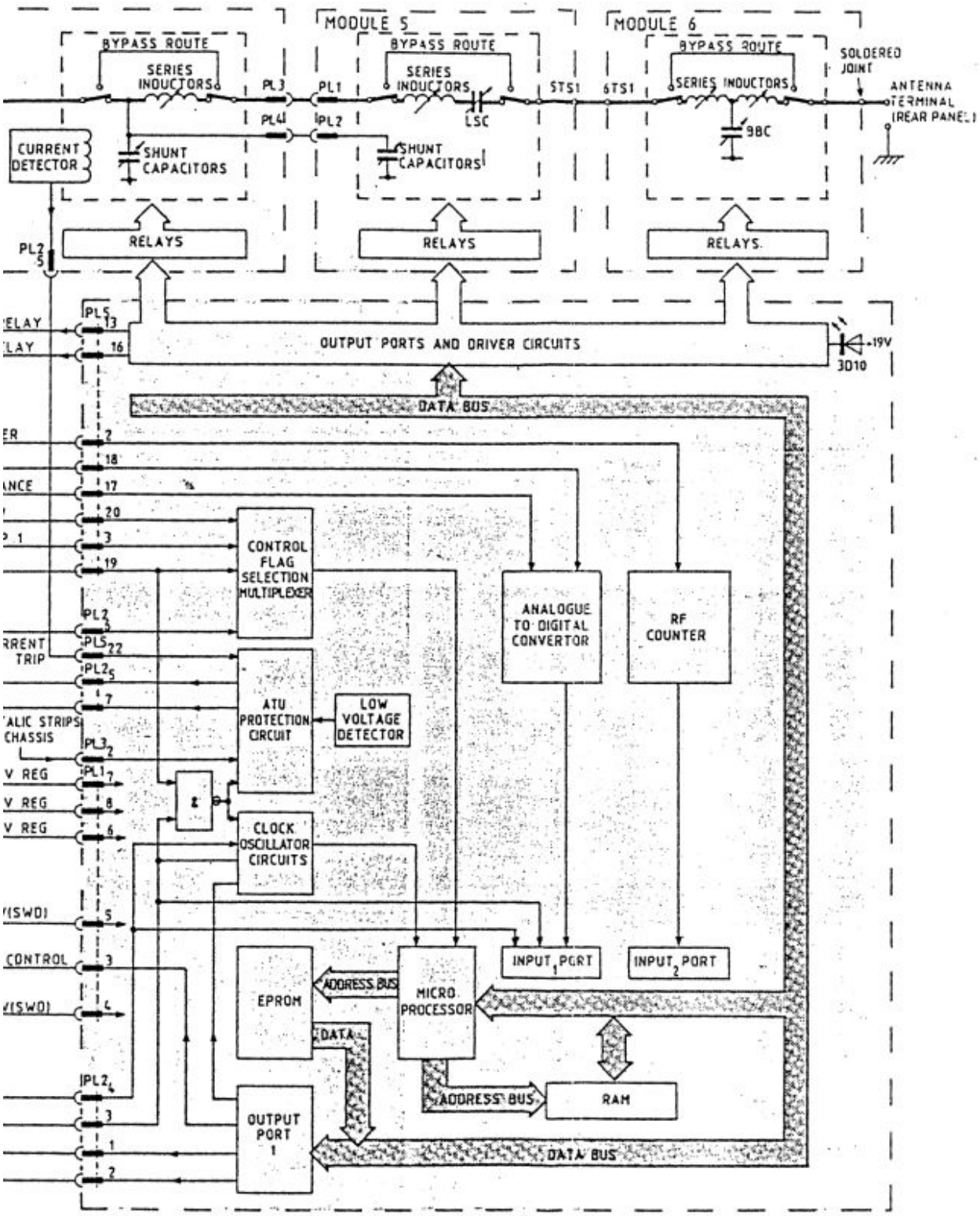

NT FUNCTIONAL BLOCK DIAGRAM

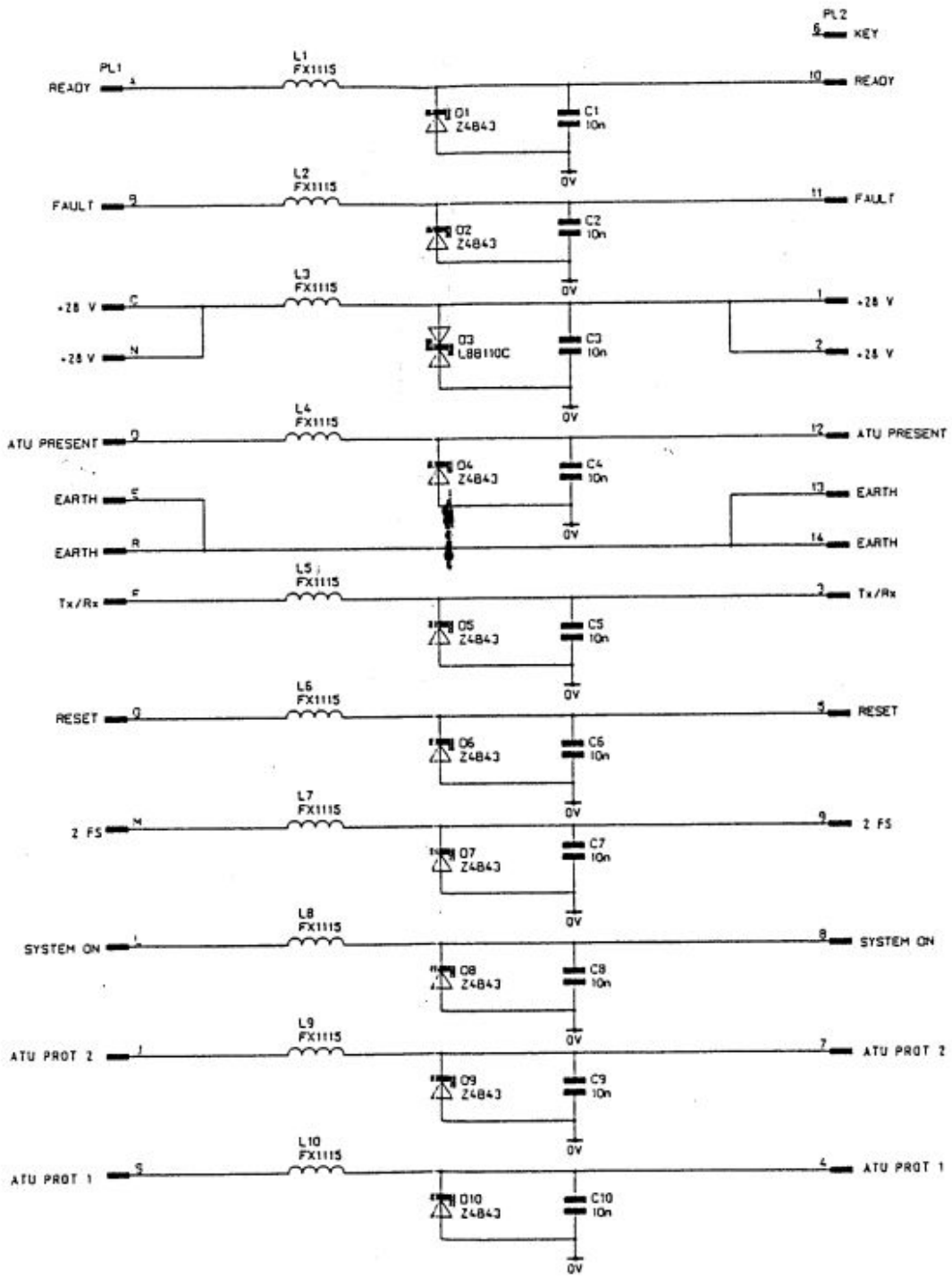

FIGURE 1002 - MODULE 1 CIRCUIT DIAGRAM

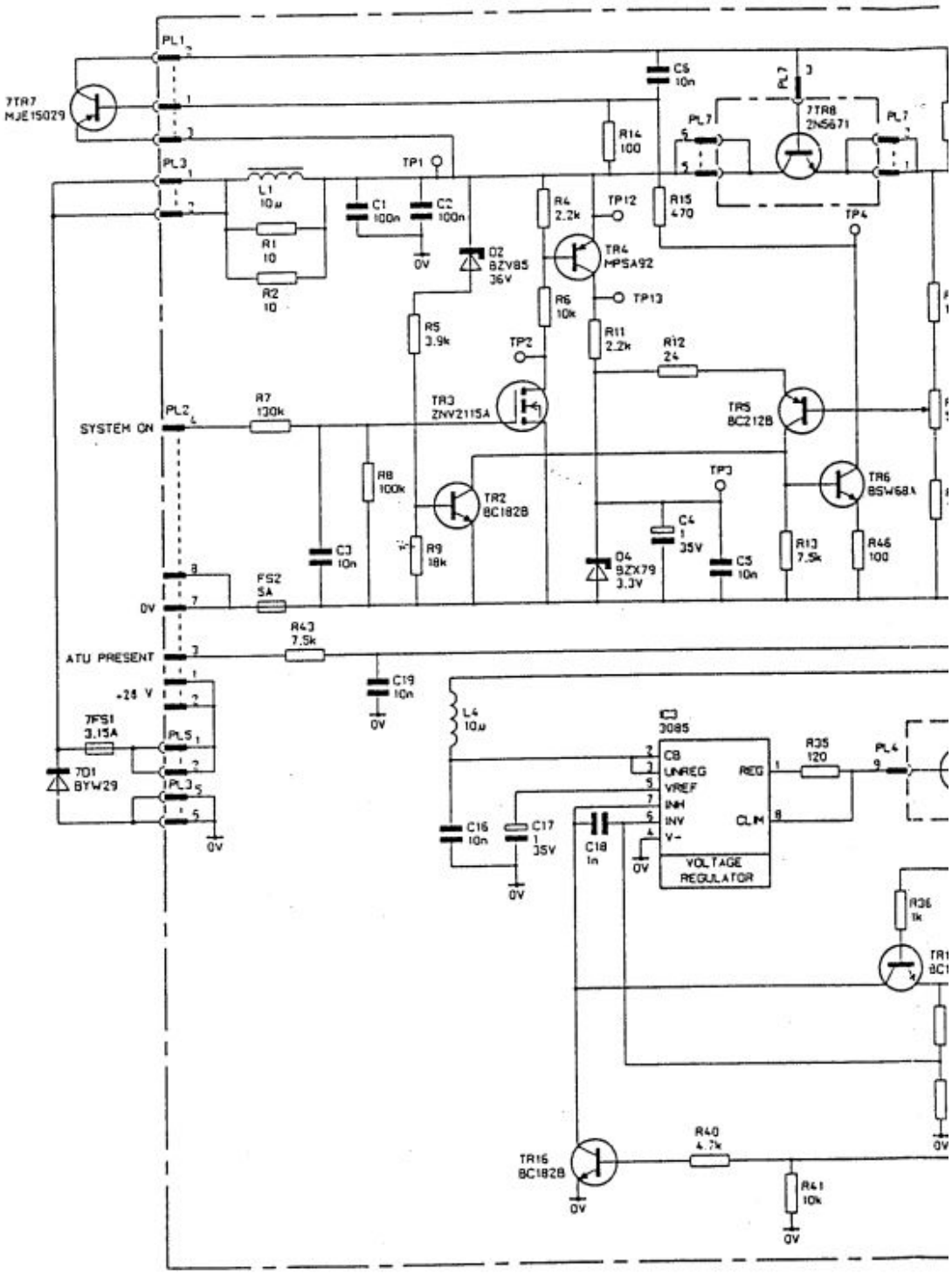

FIGURE 1003 - MODUI

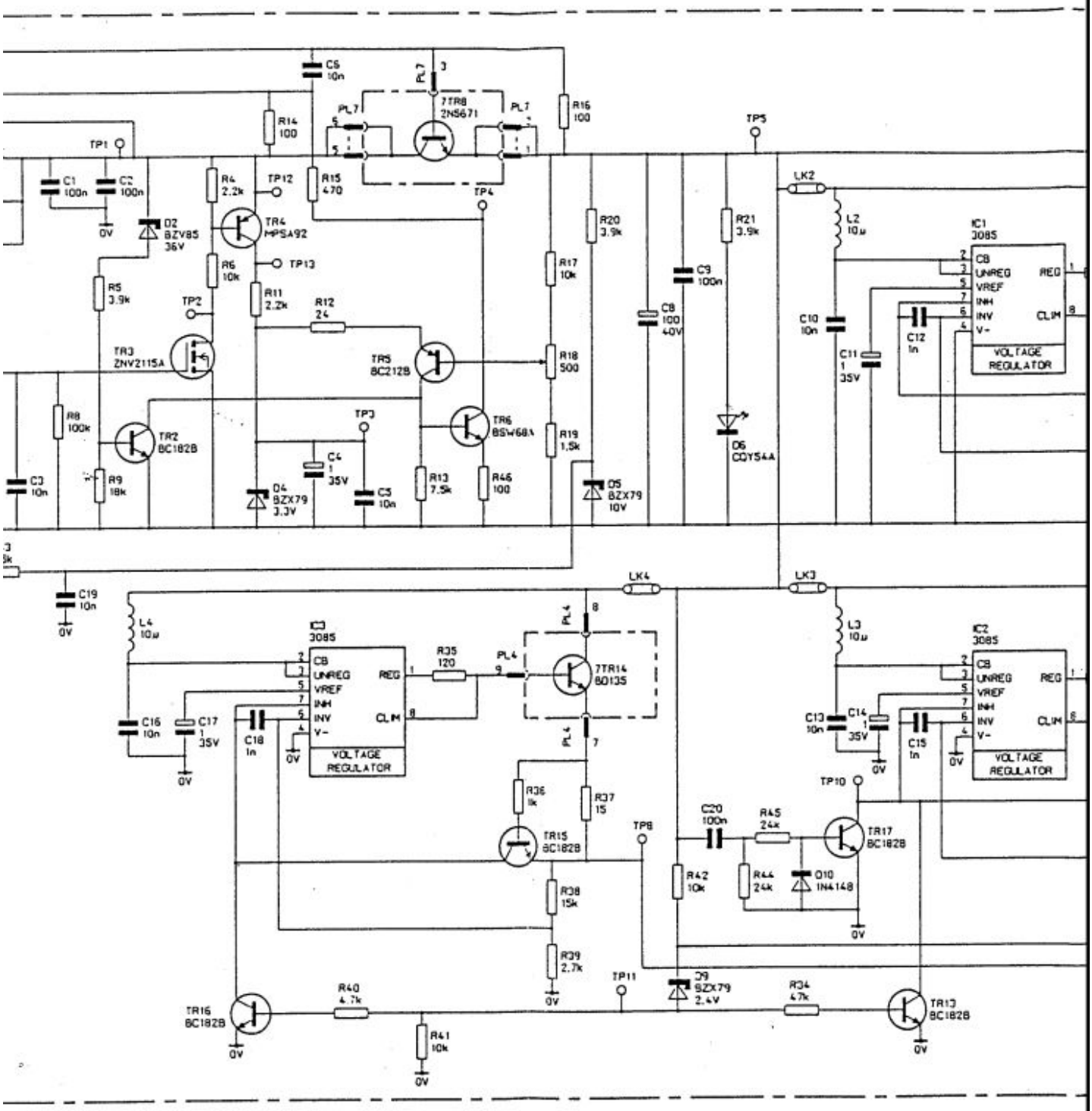

FIGURE 1003 - MODULE 2 CIRCUIT DIAGRAM

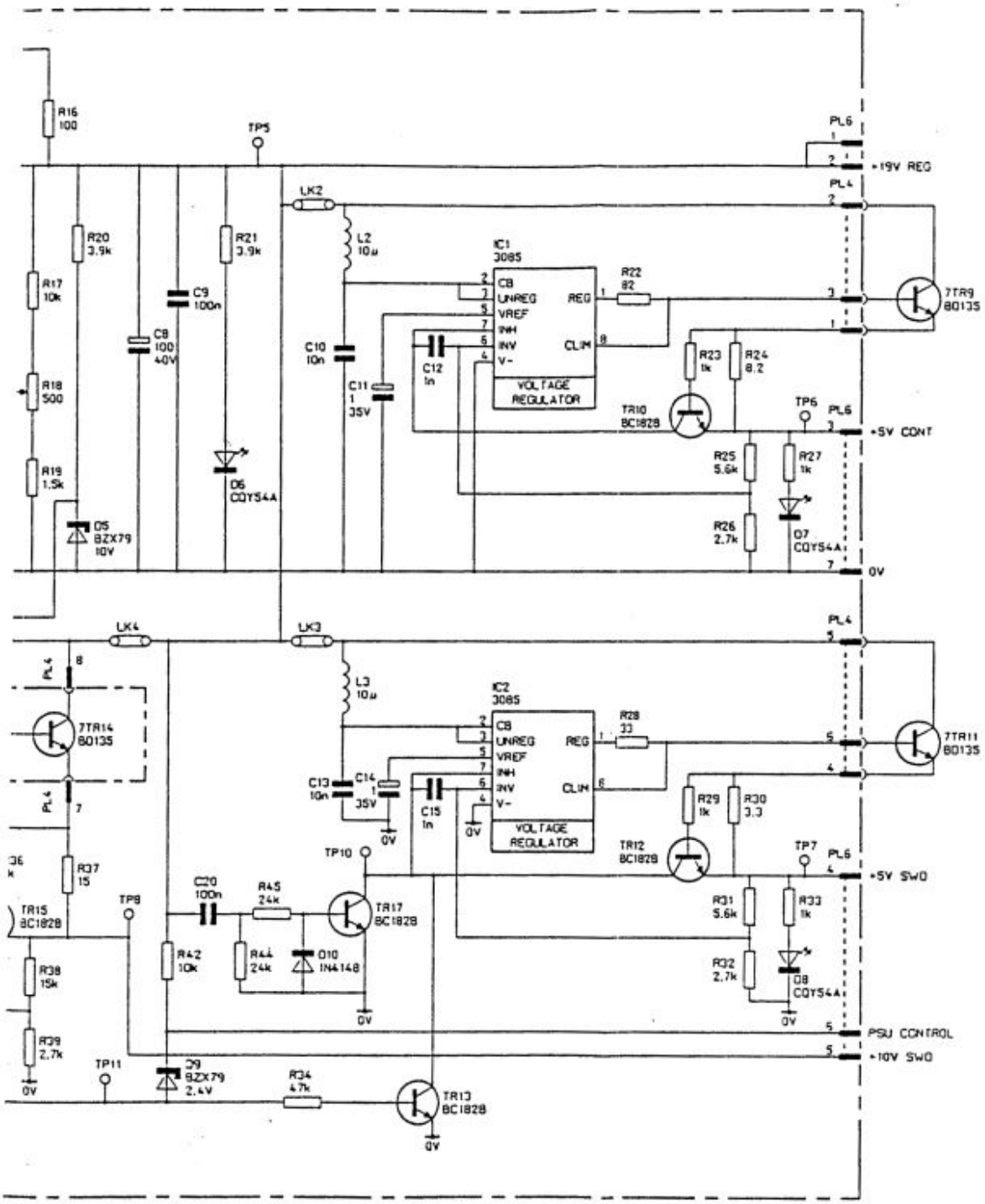

DULE 2 CIRCUIT DIAGRAM

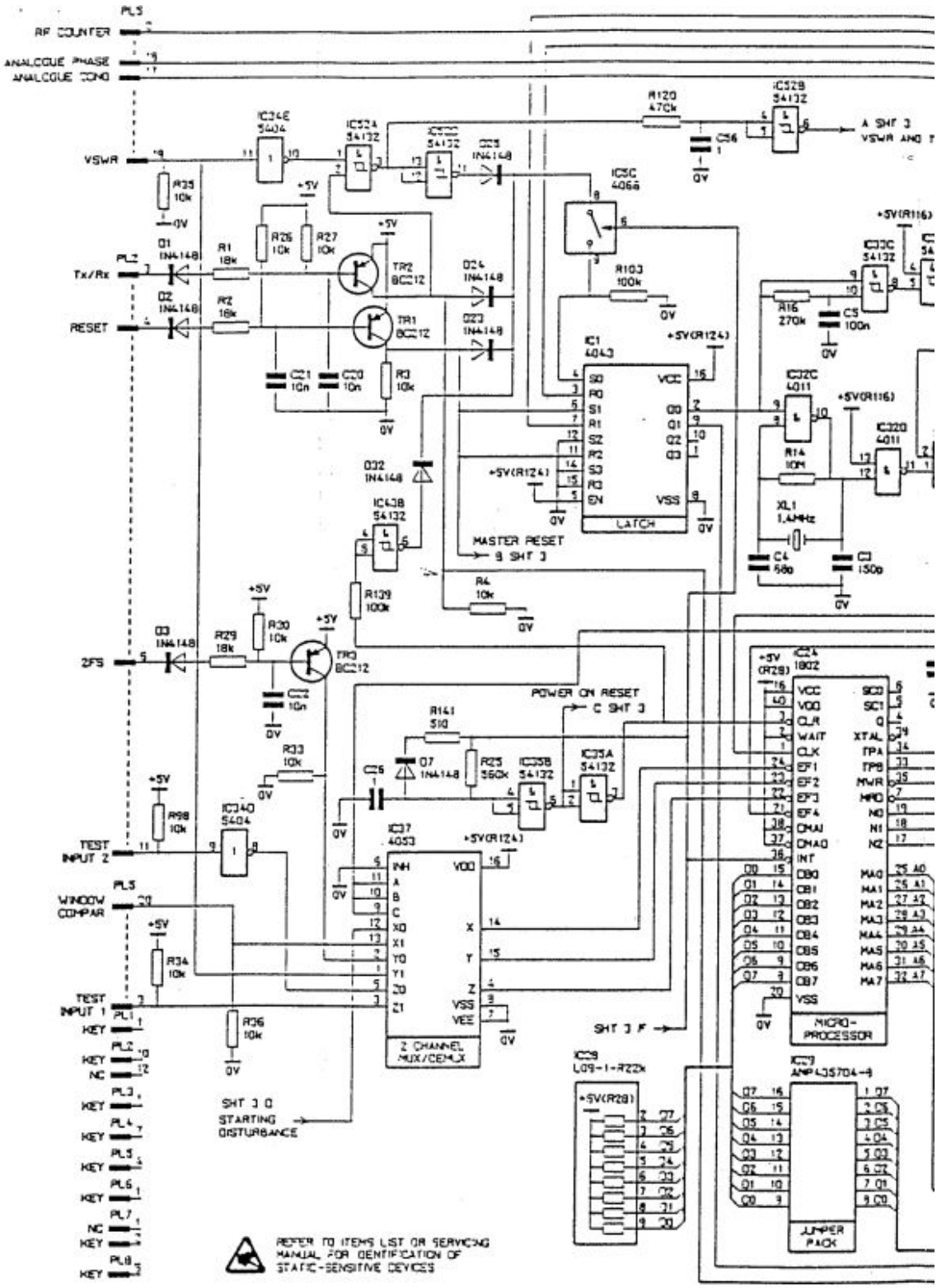

FIGURE 1004 - MODULE

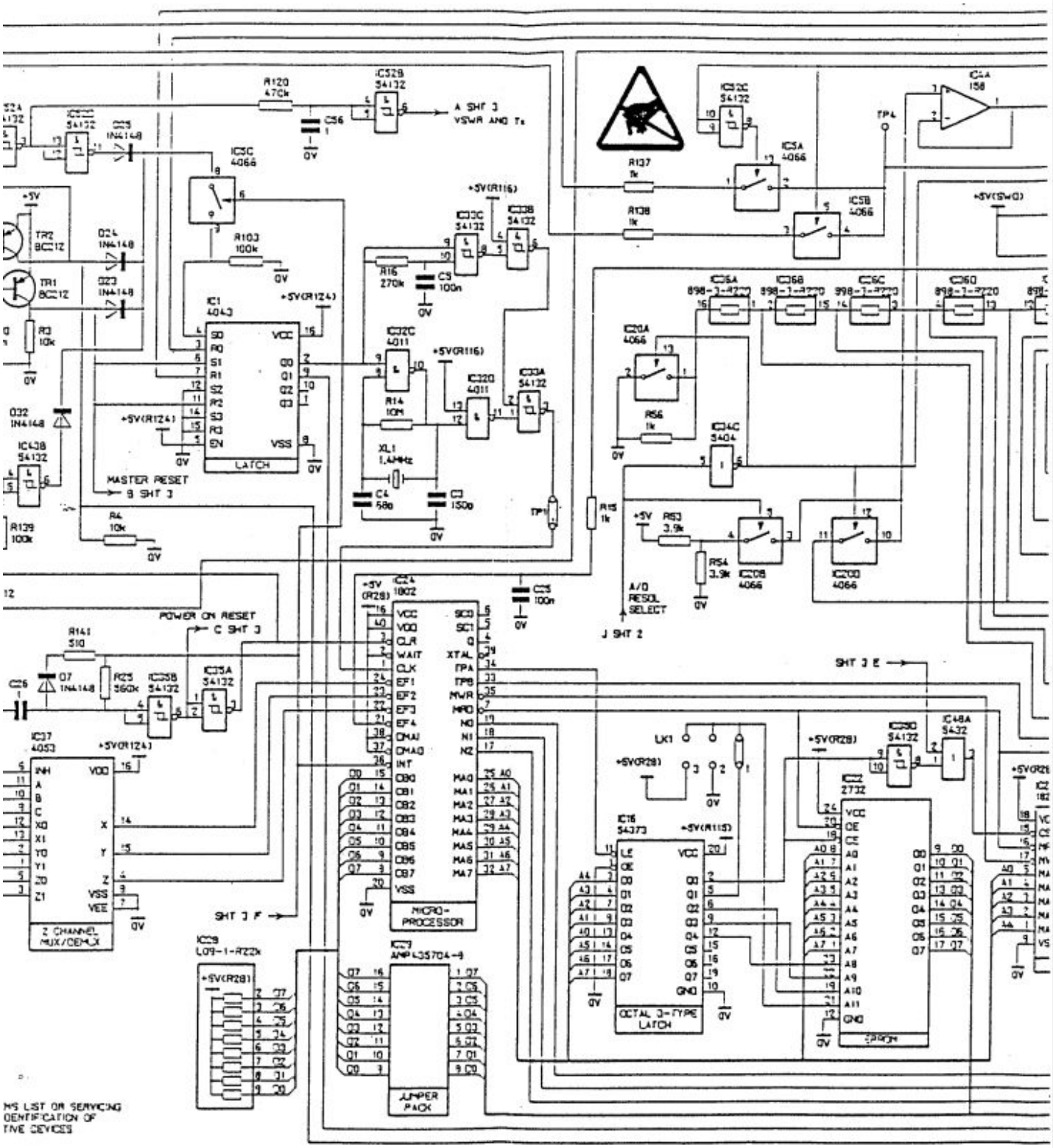

FIGURE 1004 - MODULE 3 CIRCUIT DIAGRAM (Sheet 1)

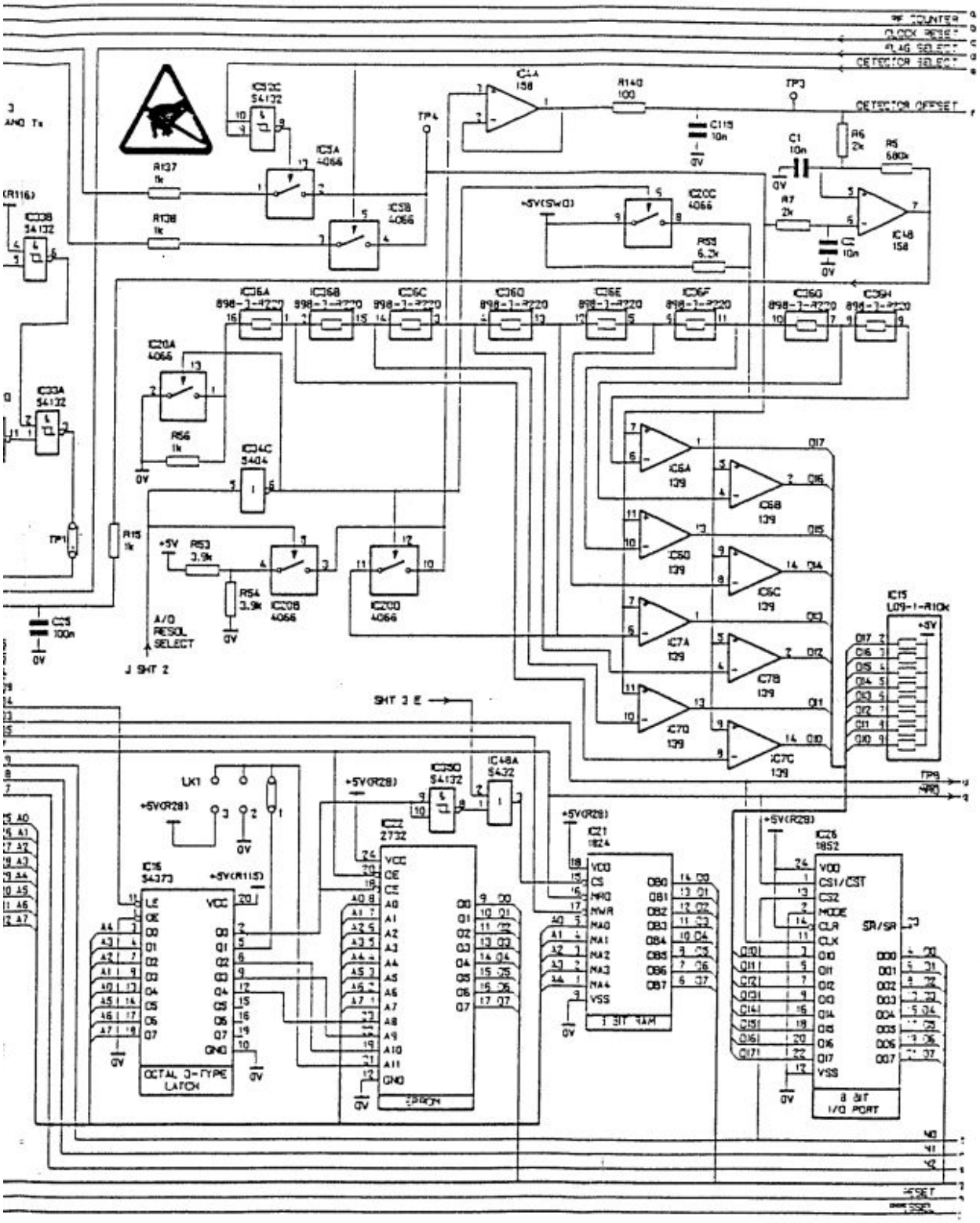

JLE 3 CIRCUIT DIAGRAM (Sheet 1)

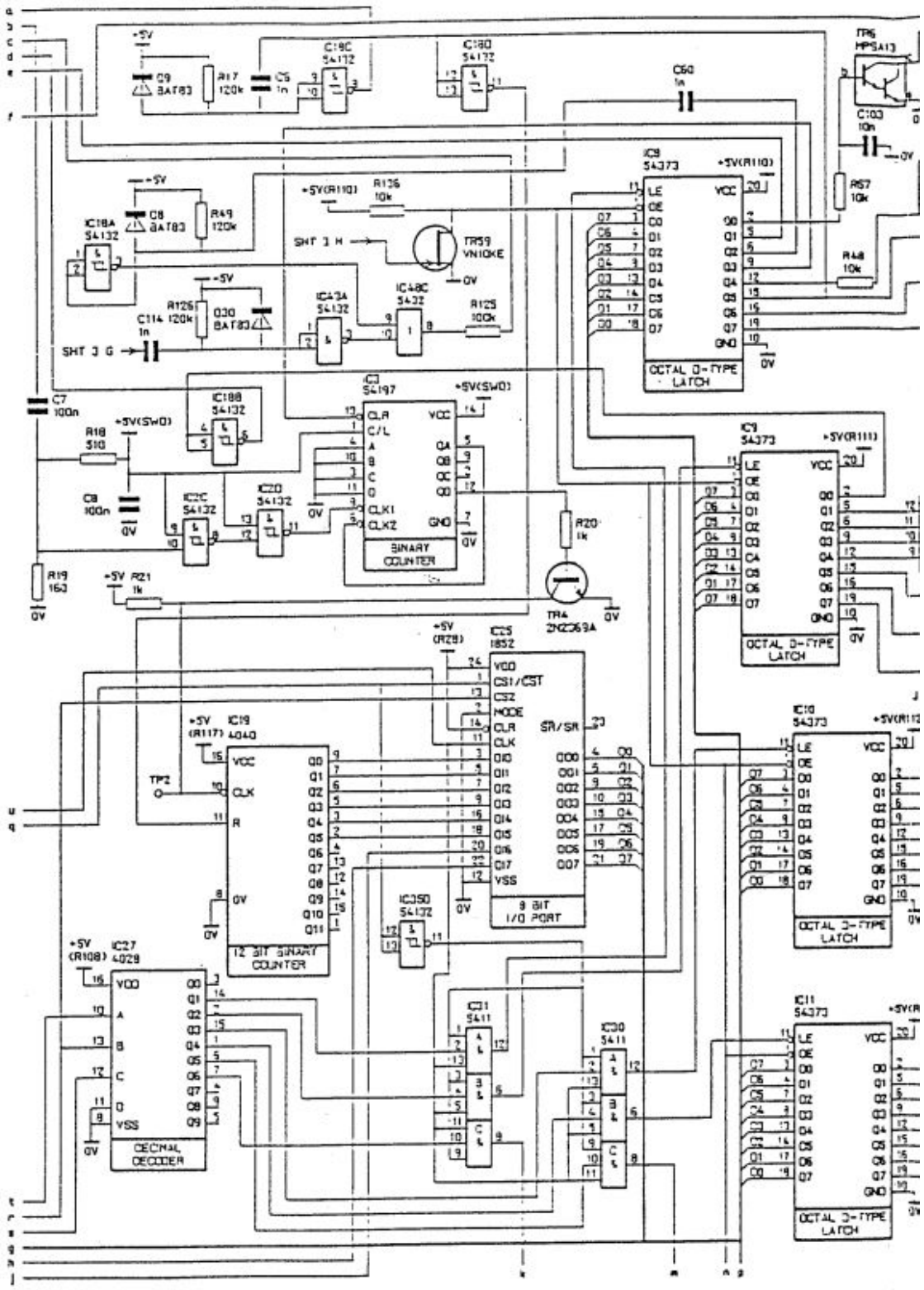

FIGURE 1004 - MODULE 3

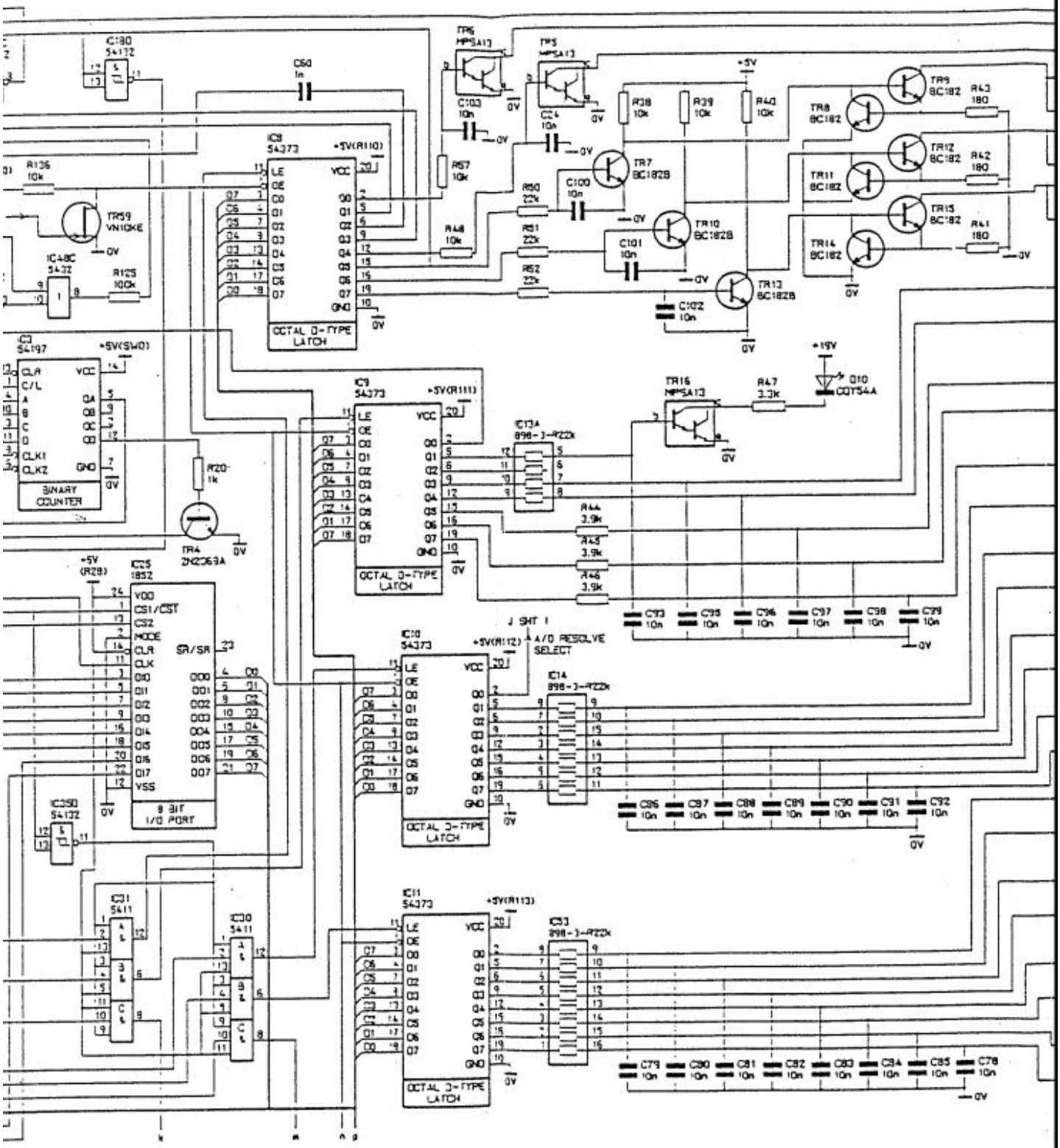

FIGURE 1004 - MODULE 3 CIRCUIT DIAGRAM (Sheet 2)

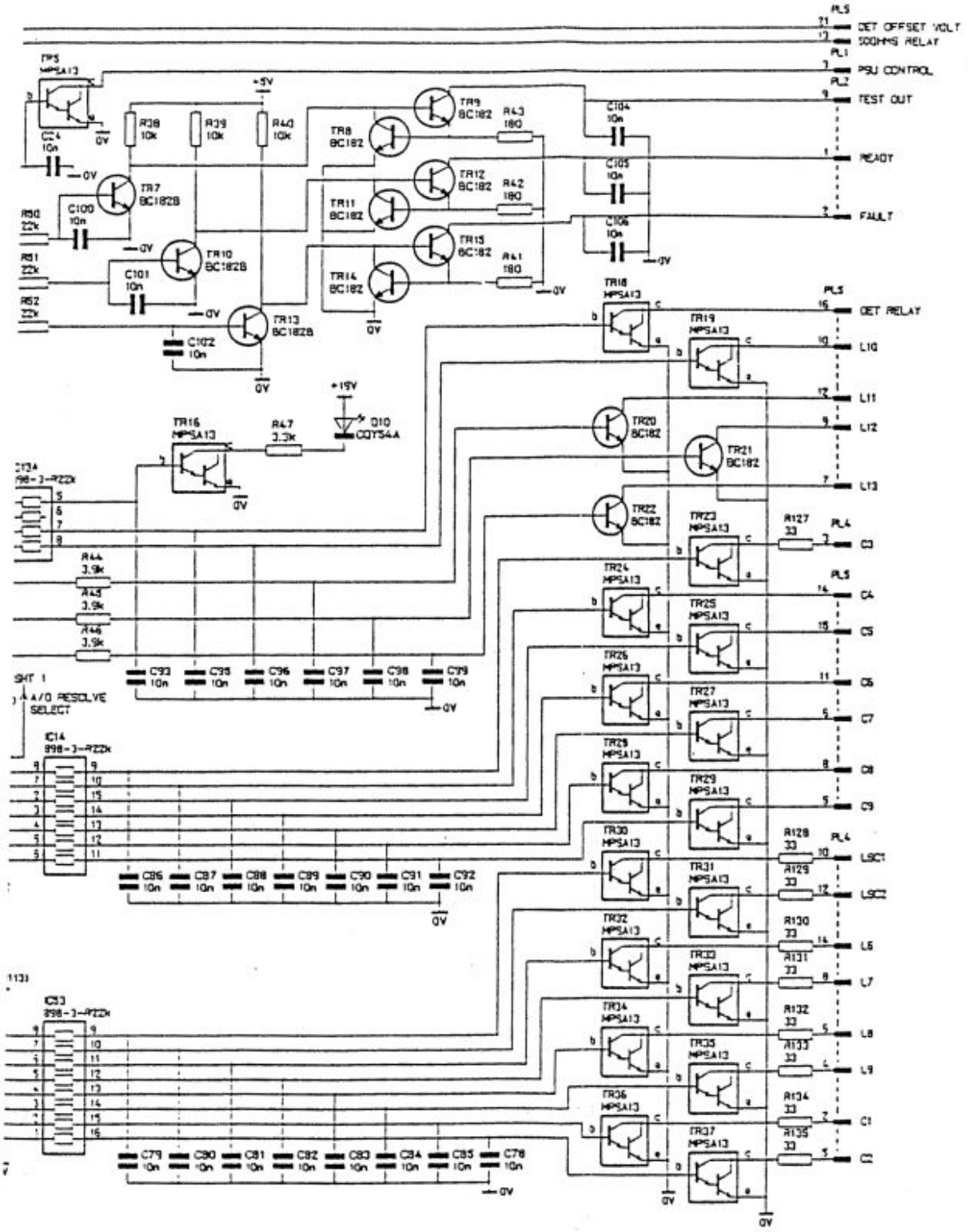

CIRCUIT DIAGRAM (Sheet 2)

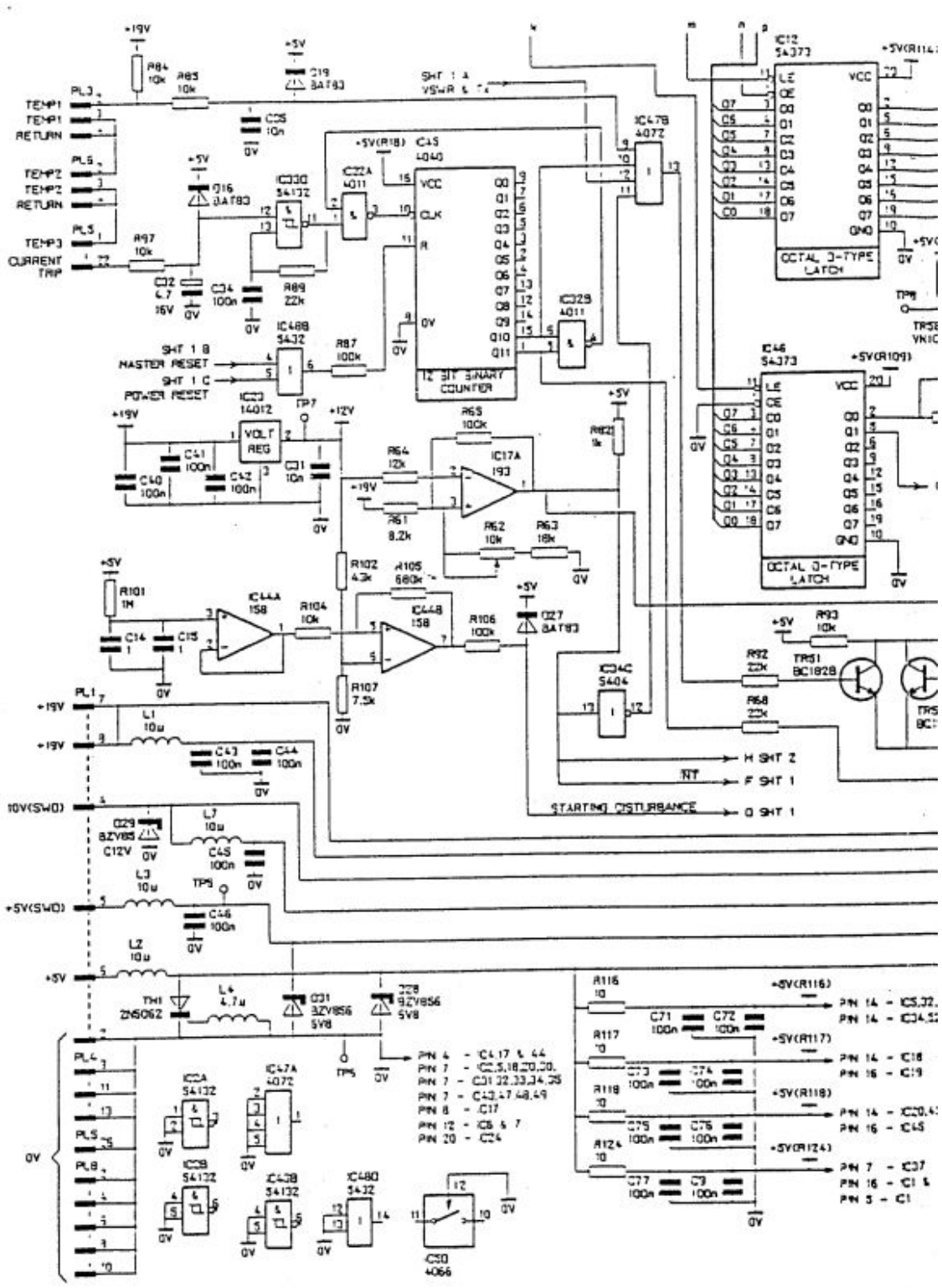

FIGURE 1004 - MODULE

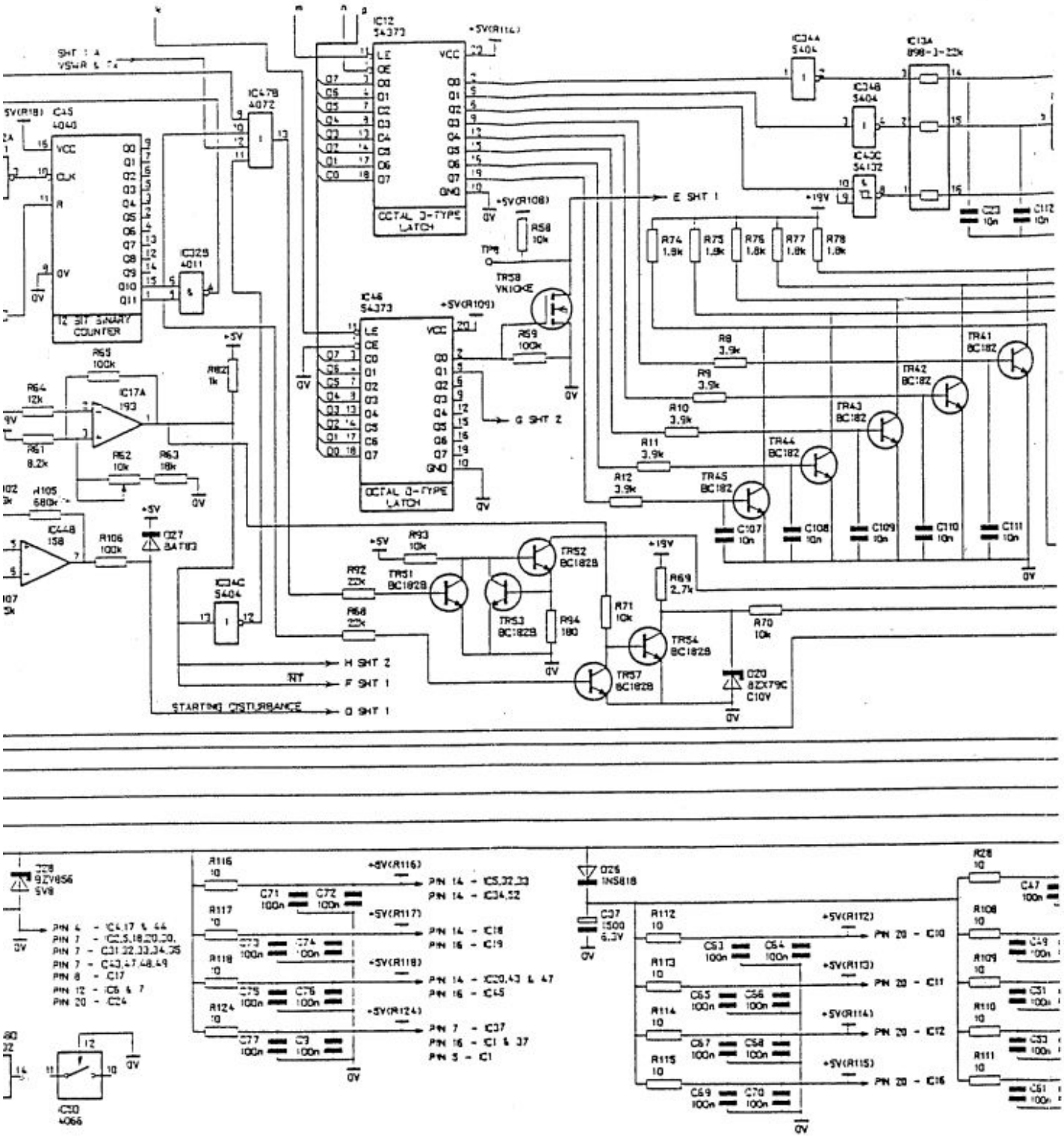

FIGURE 1004 - MODULE 3 CIRCUIT DIAGRAM (Sheet 3)

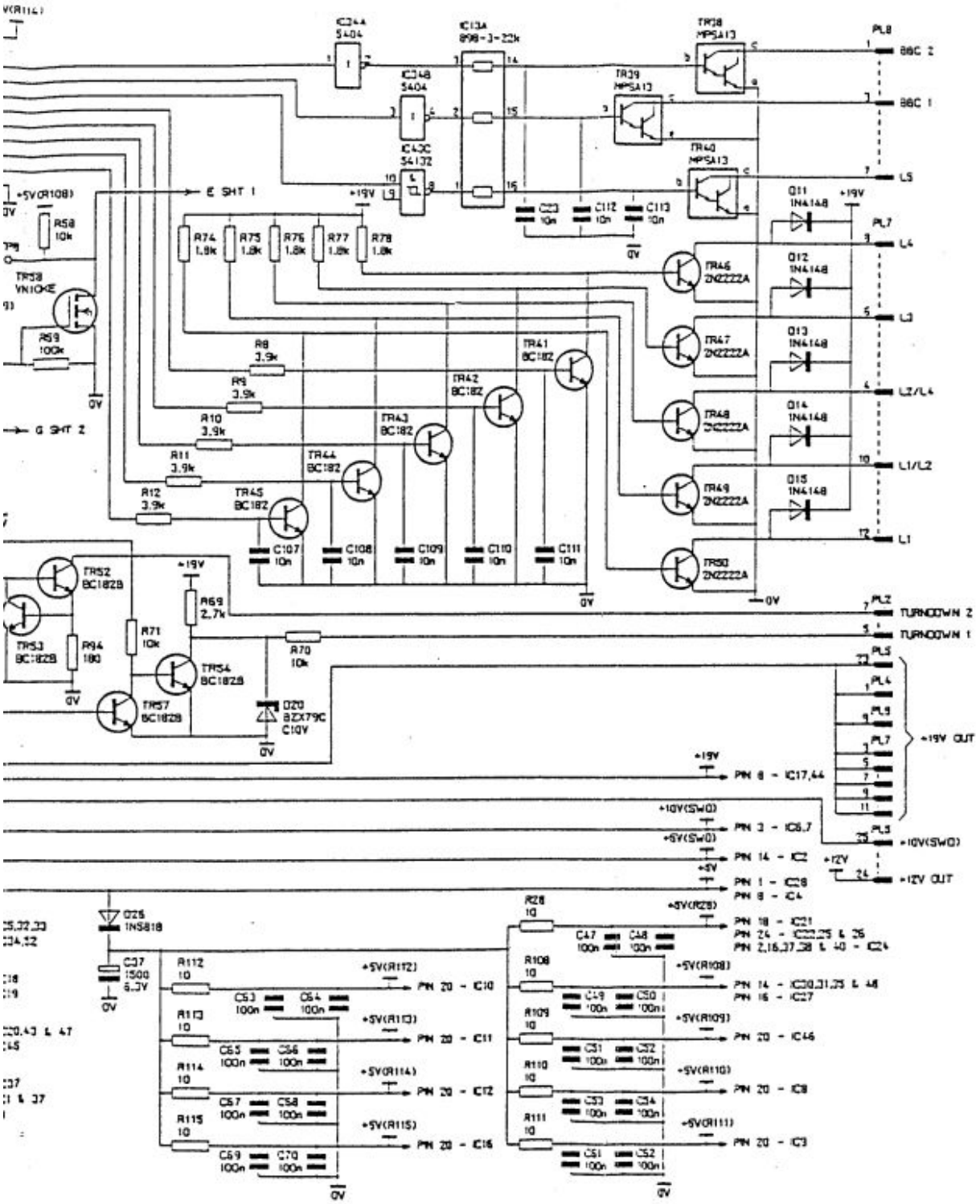

LE 3 CIRCUIT DIAGRAM (Sheet 3)

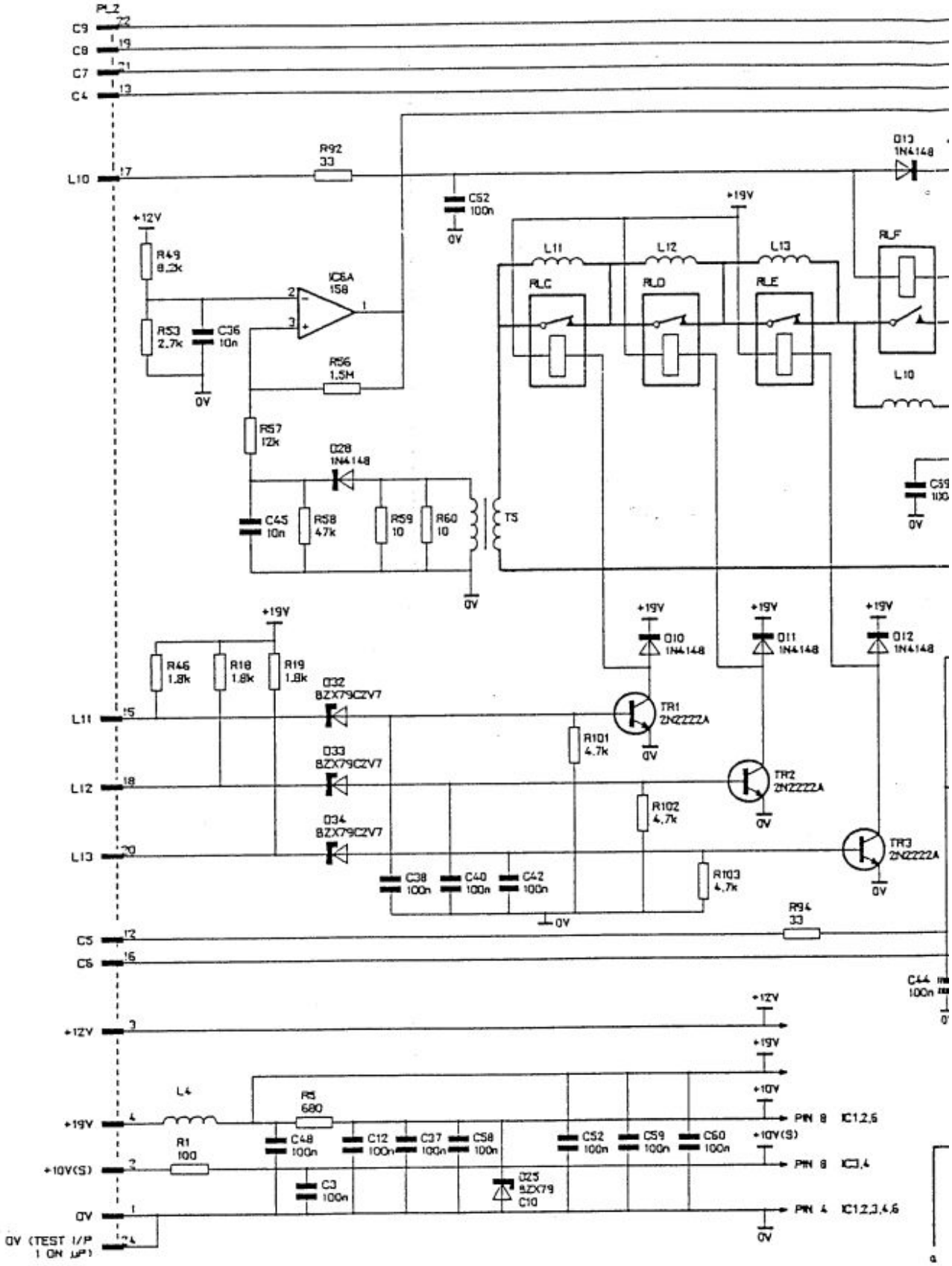

FIGURE 1005 - MODULE

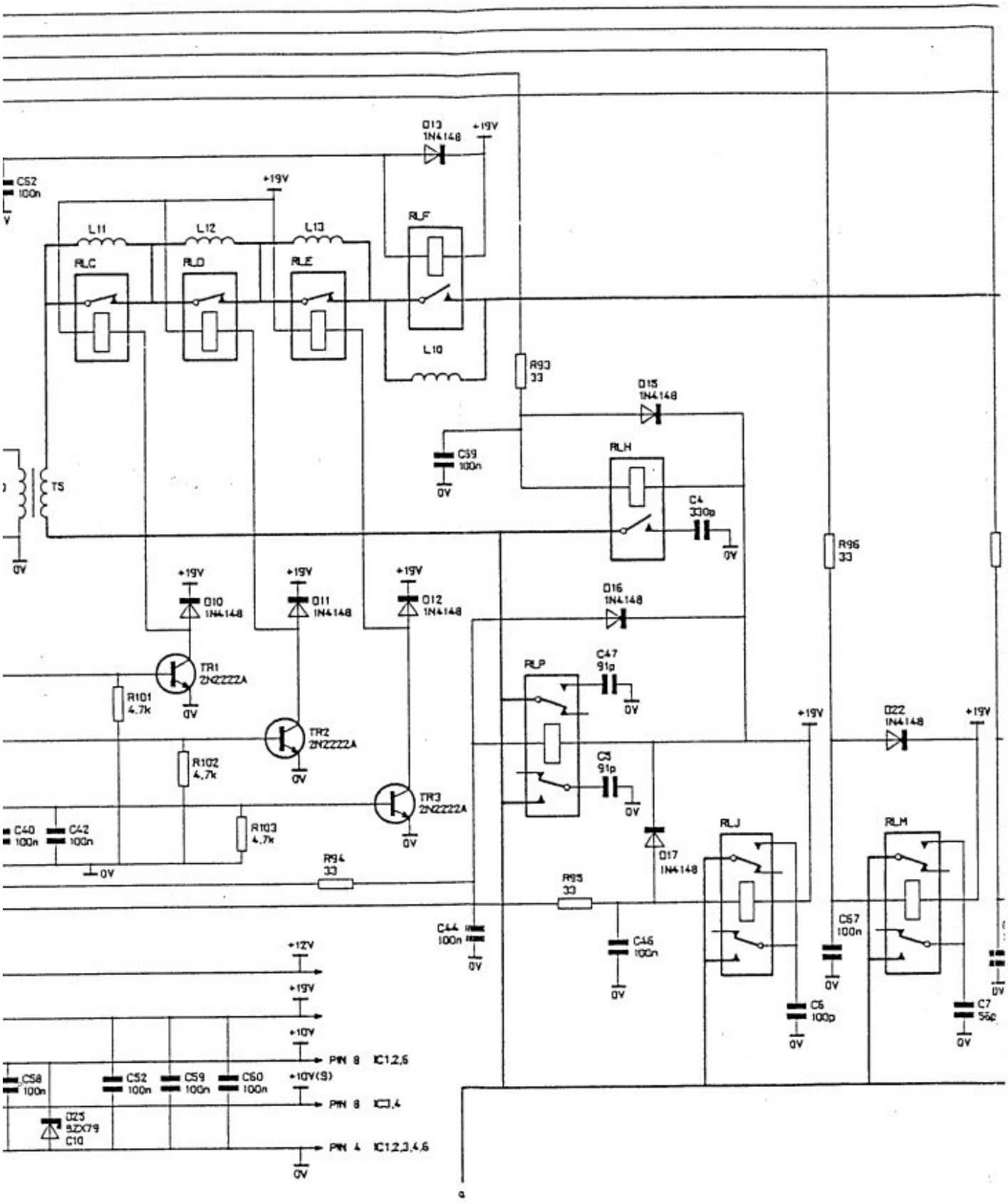

FIGURE 1005 - MODULE 4 CIRCUIT DIAGRAM (Sheet 1)

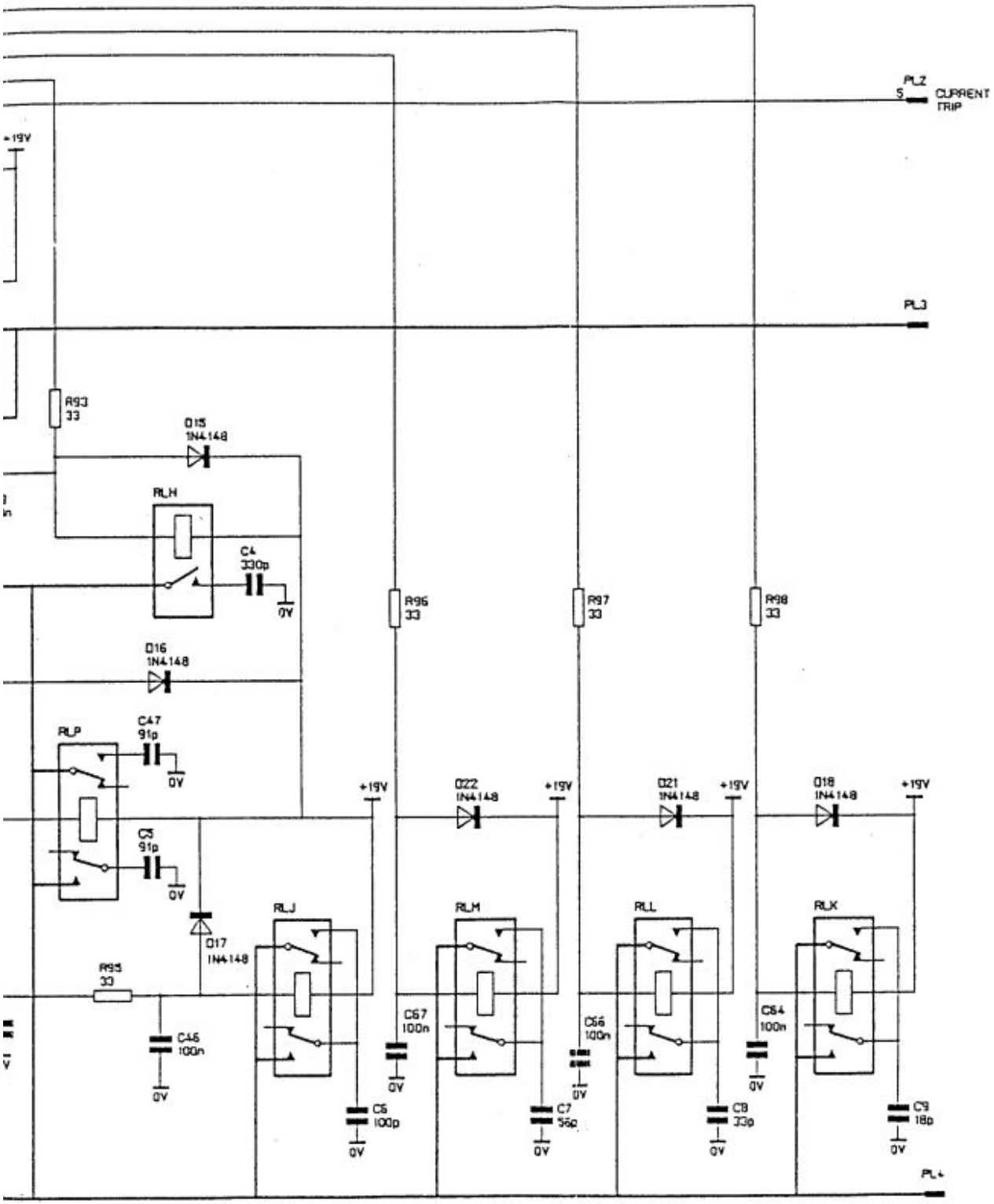

E 4 CIRCUIT DIAGRAM (Sheet 1)

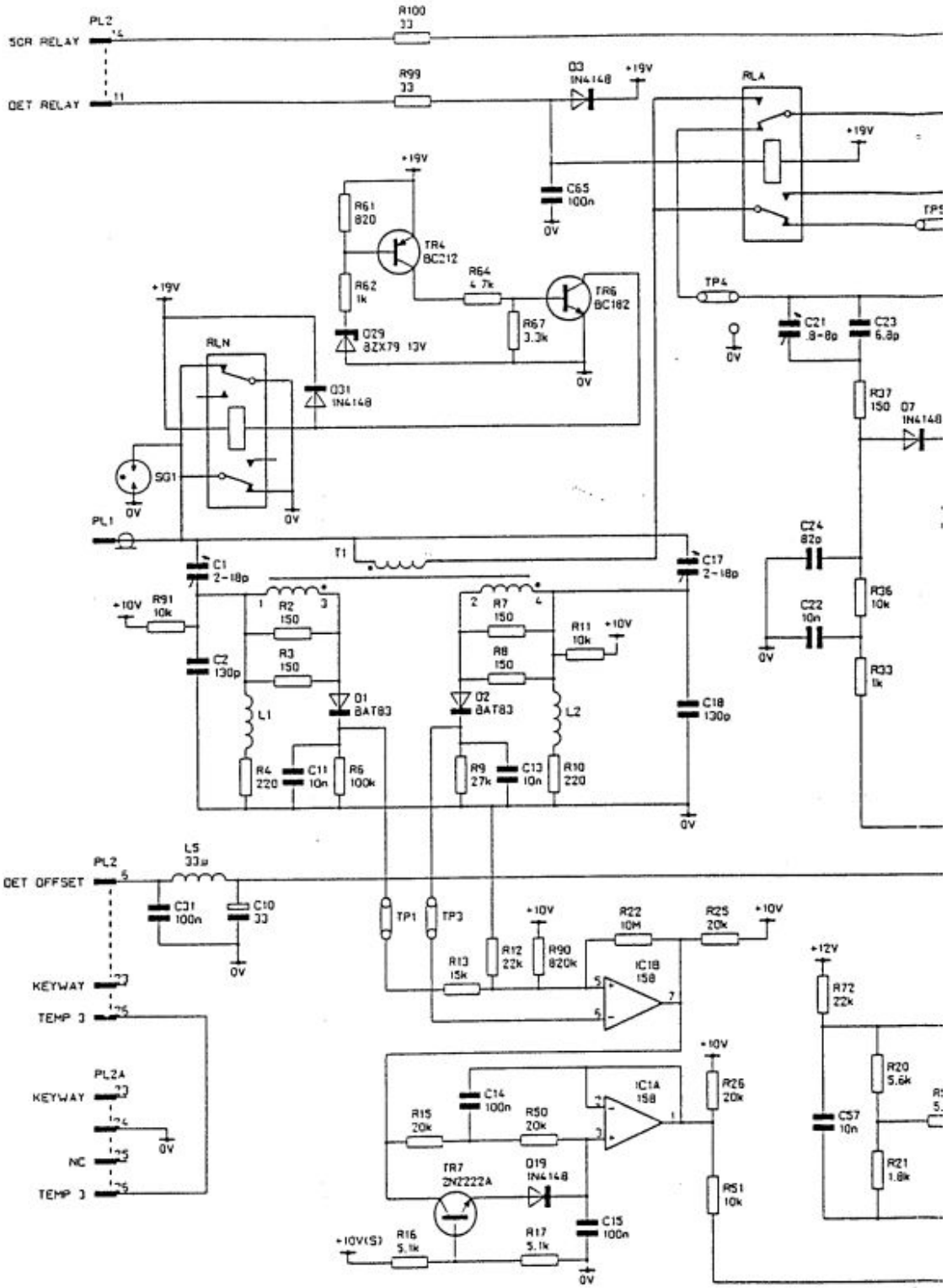

FIGURE 1005 - MODULE 4

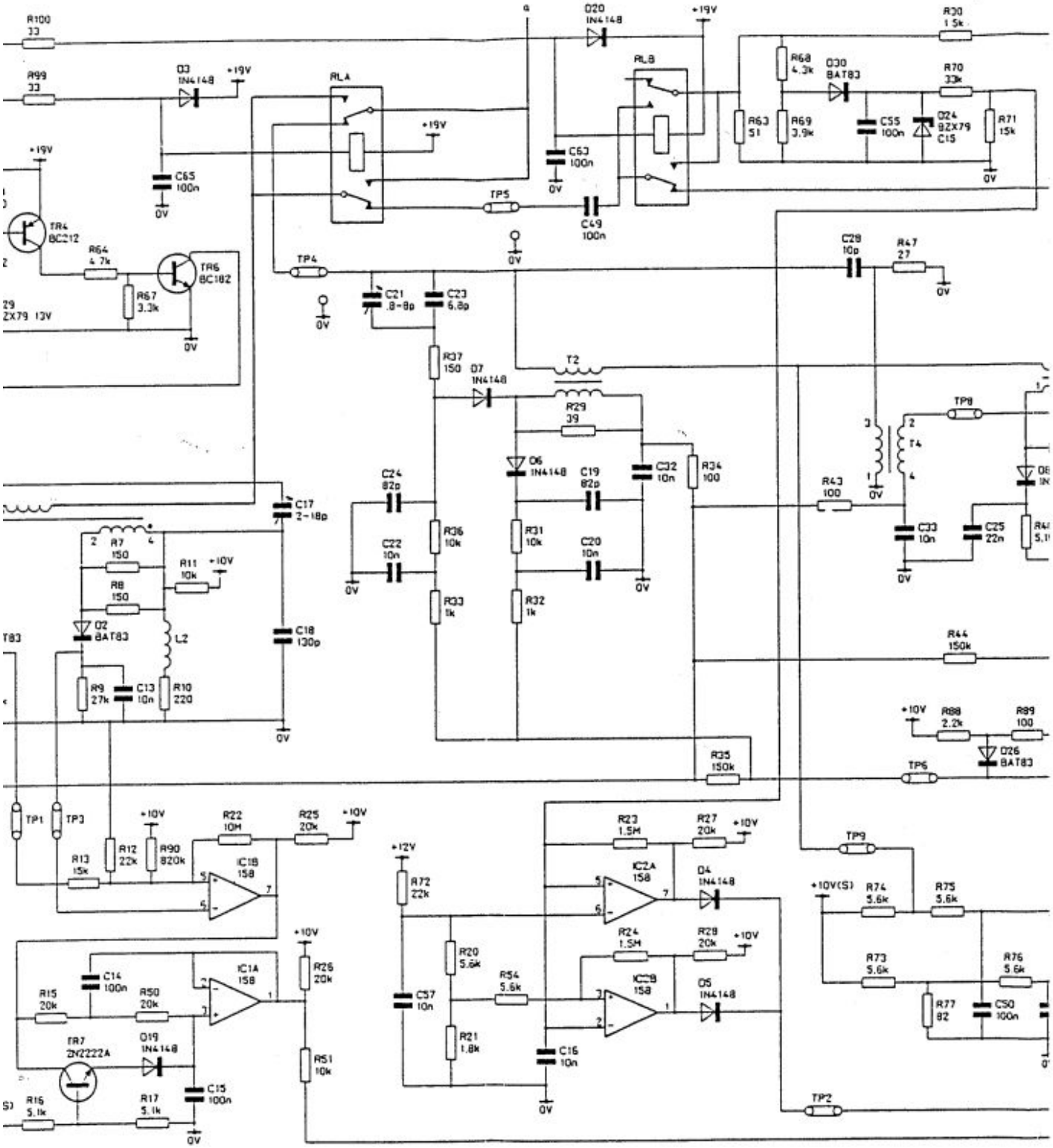

FIGURE 1005 - MODULE 4 CIRCUIT DIAGRAM (Sheet 2)

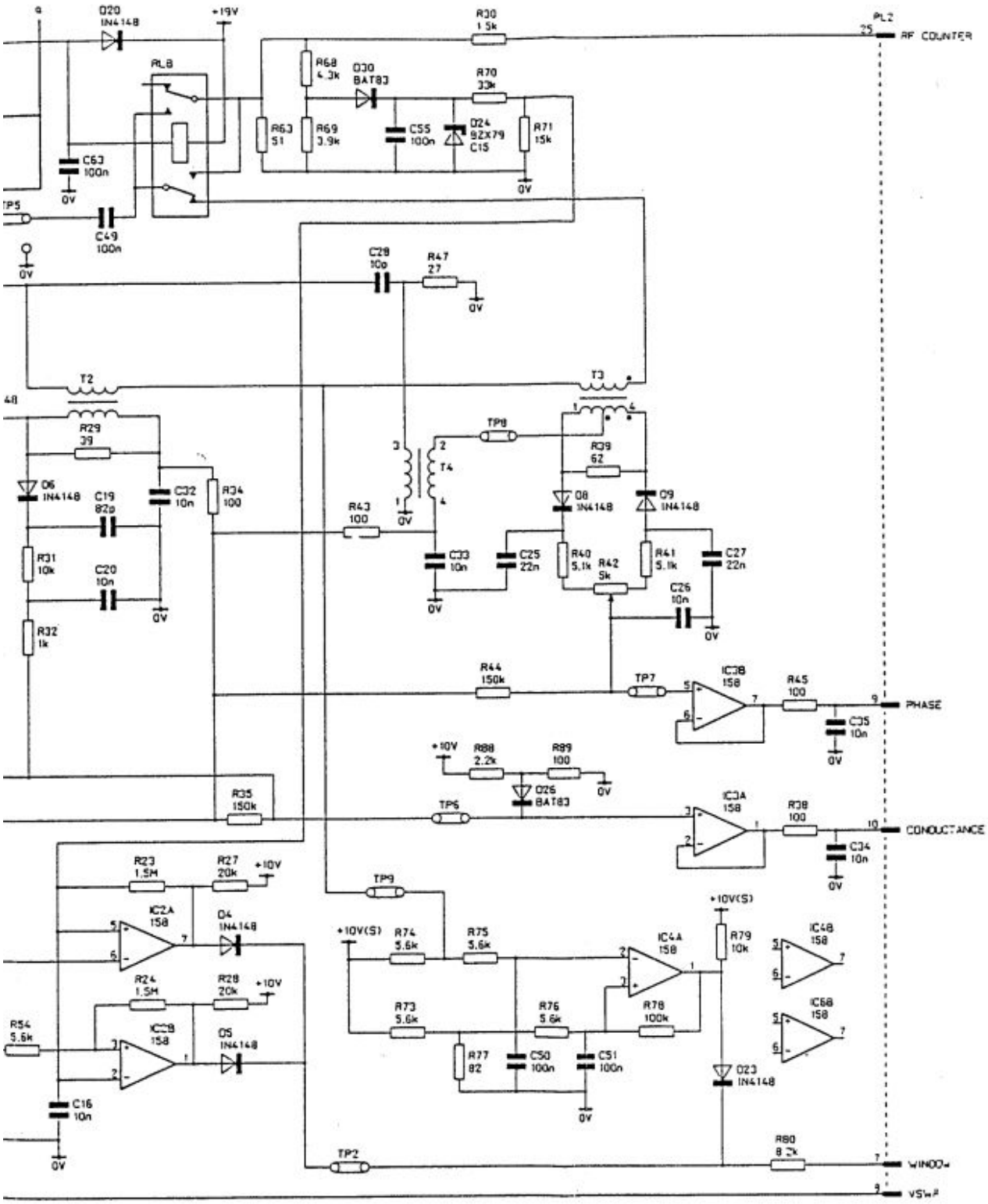

. 4 CIRCUIT DIAGRAM (Sheet 2)

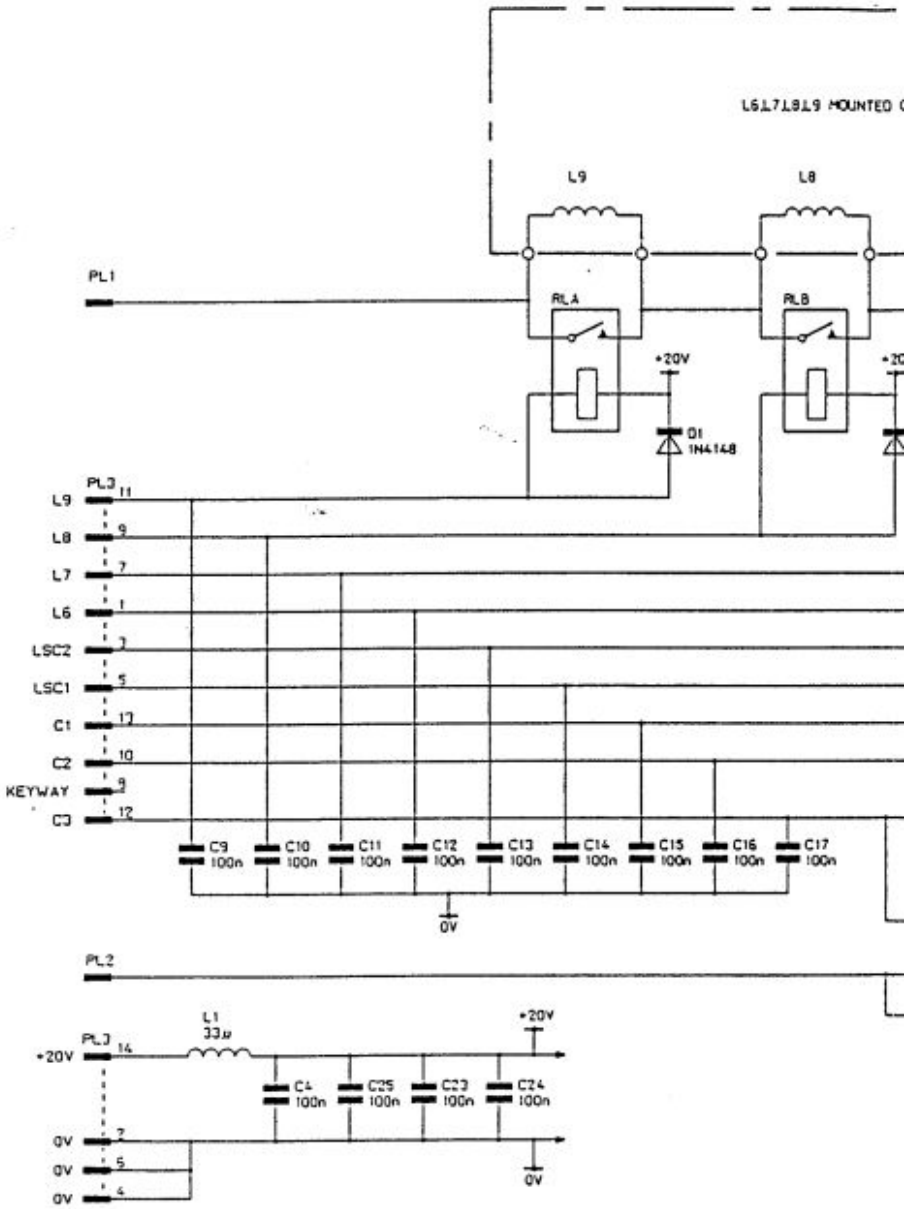

FIGURE 1006 - MODU

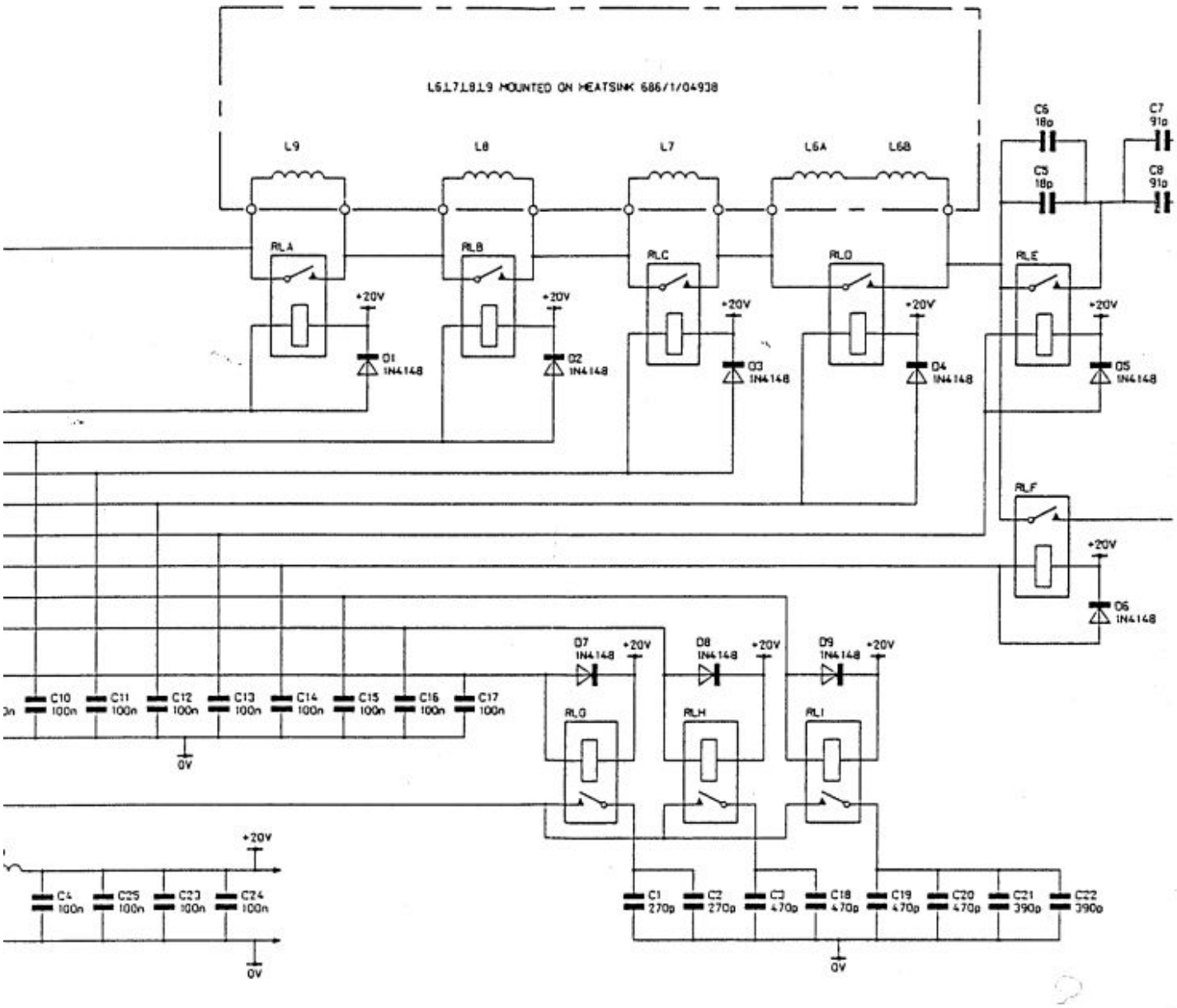

FIGURE 1006 - MODULE 5 CIRCUIT DIAGRAM

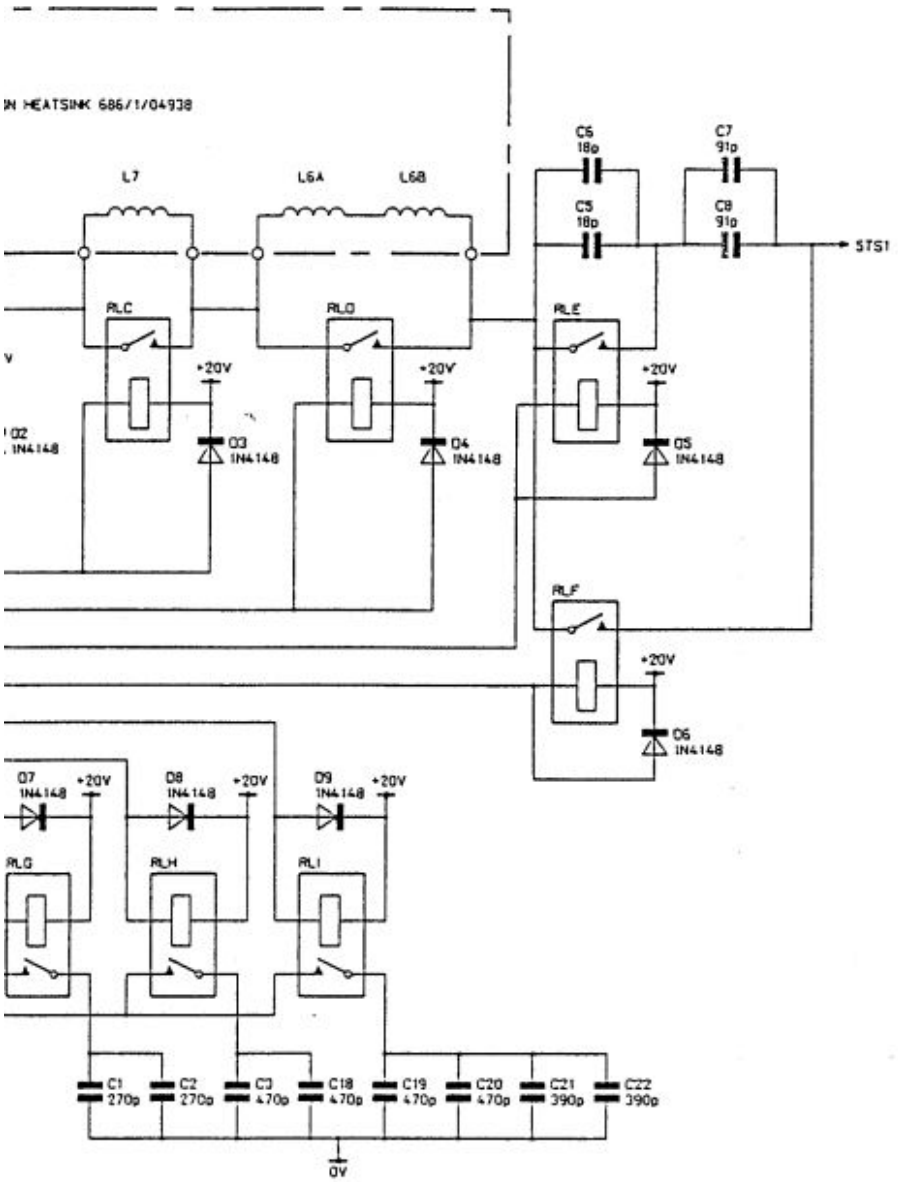

ULE 5 CIRCUIT DIAGRAM

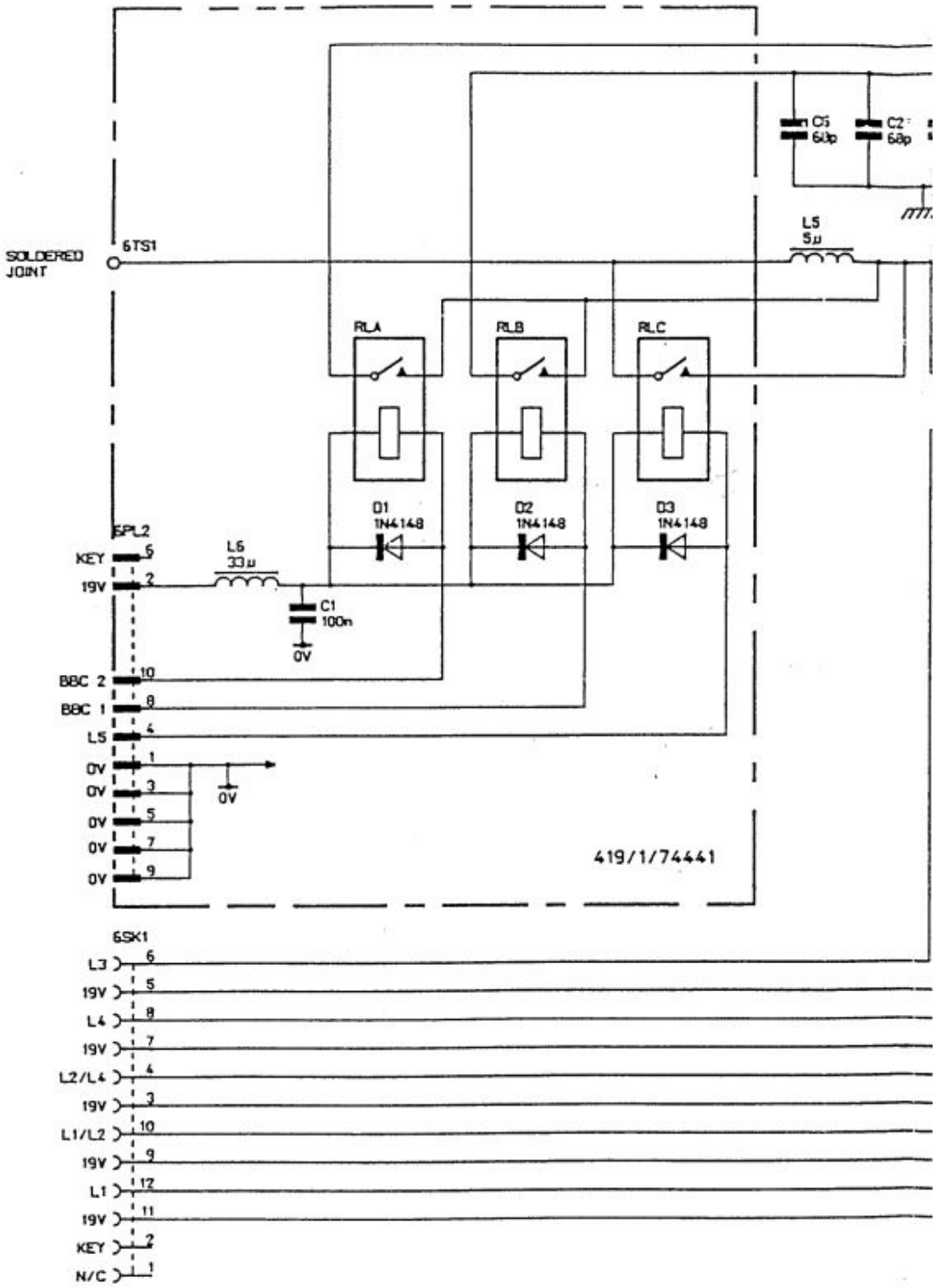

FIGURE 1007 - MODU

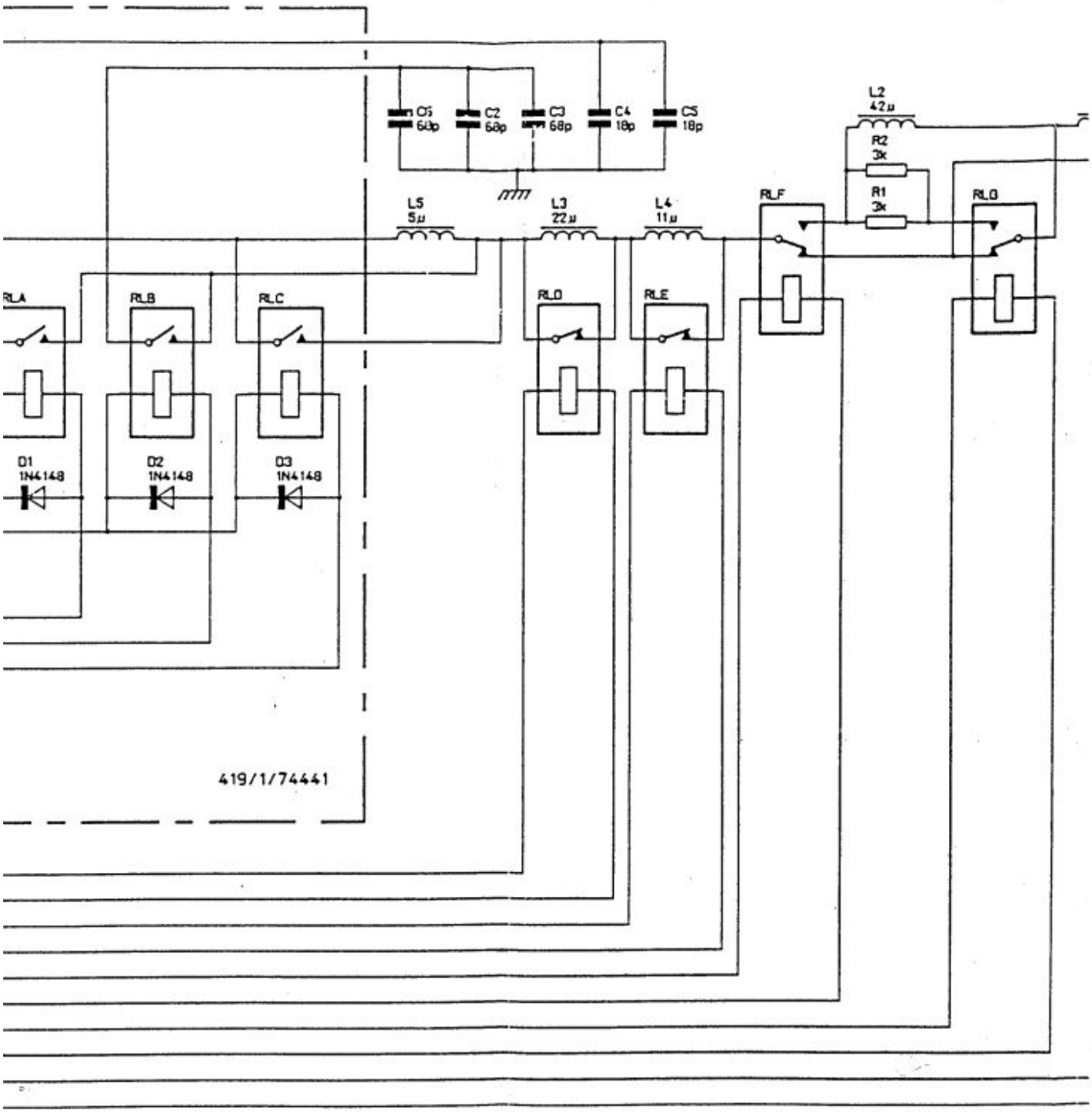

FIGURE 1007 - MODULE 6 CIRCUIT DIAGRAM

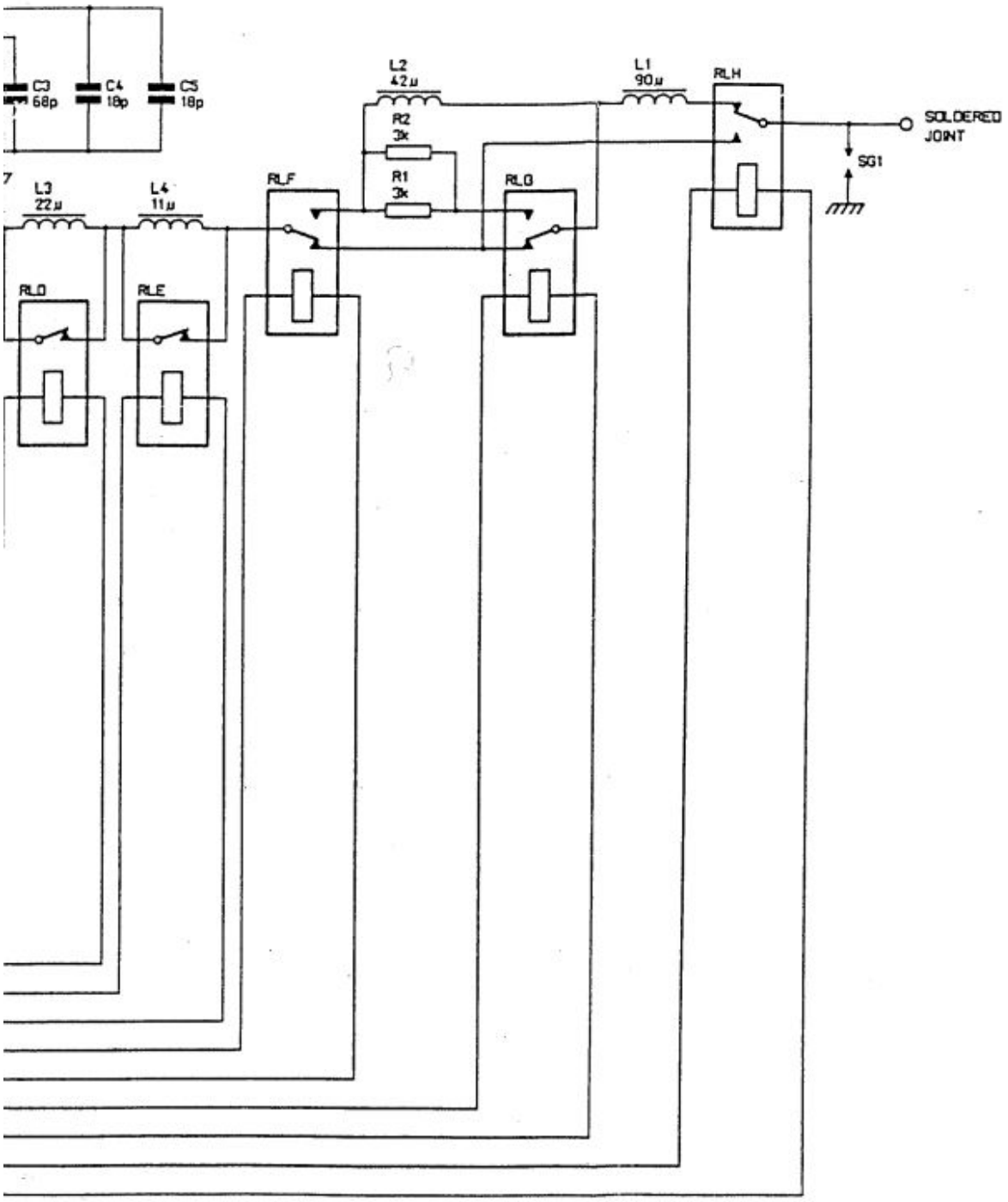

JLE 6 CIRCUIT DIAGRAM

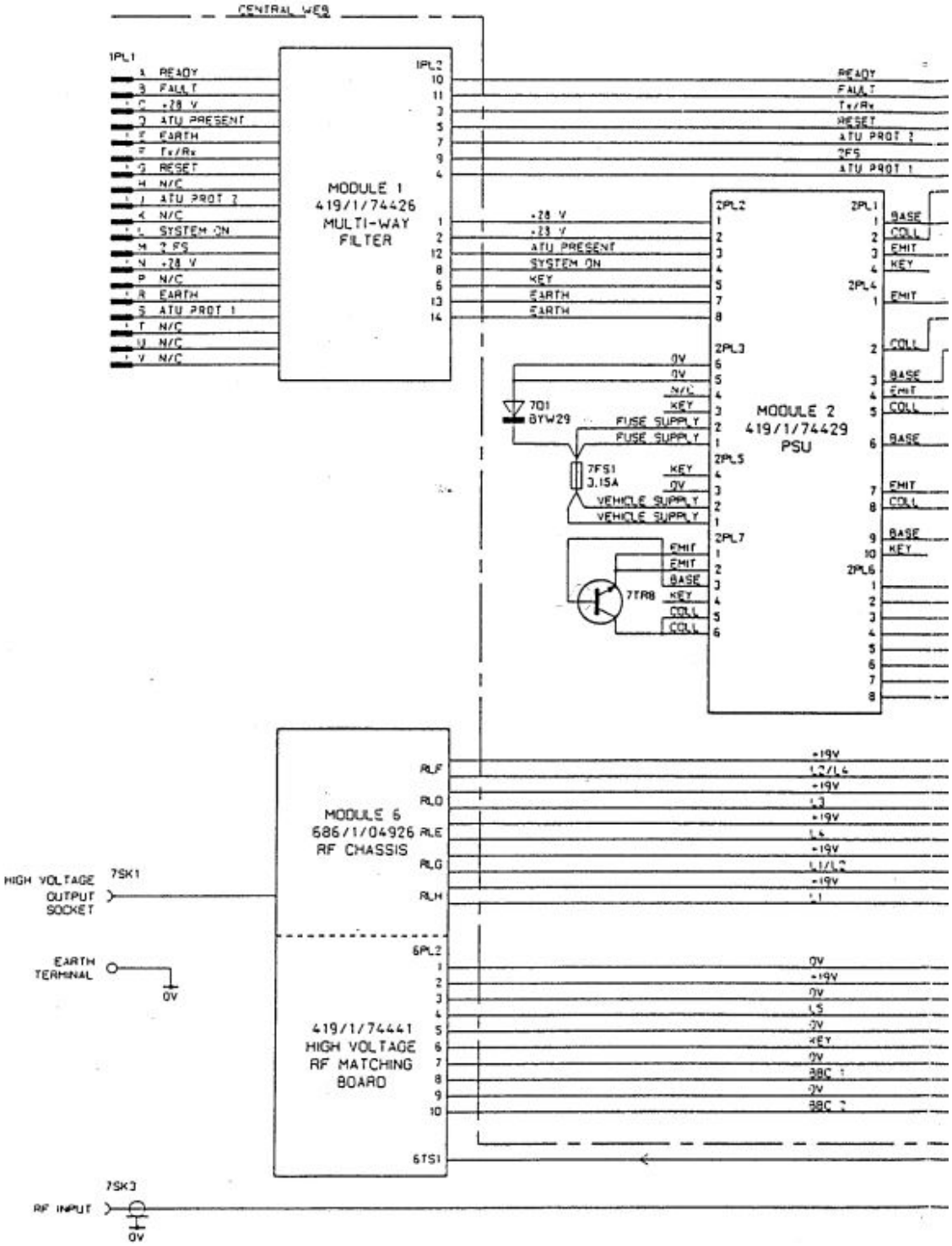

FIGURE 1008 - HF ATU ECUI

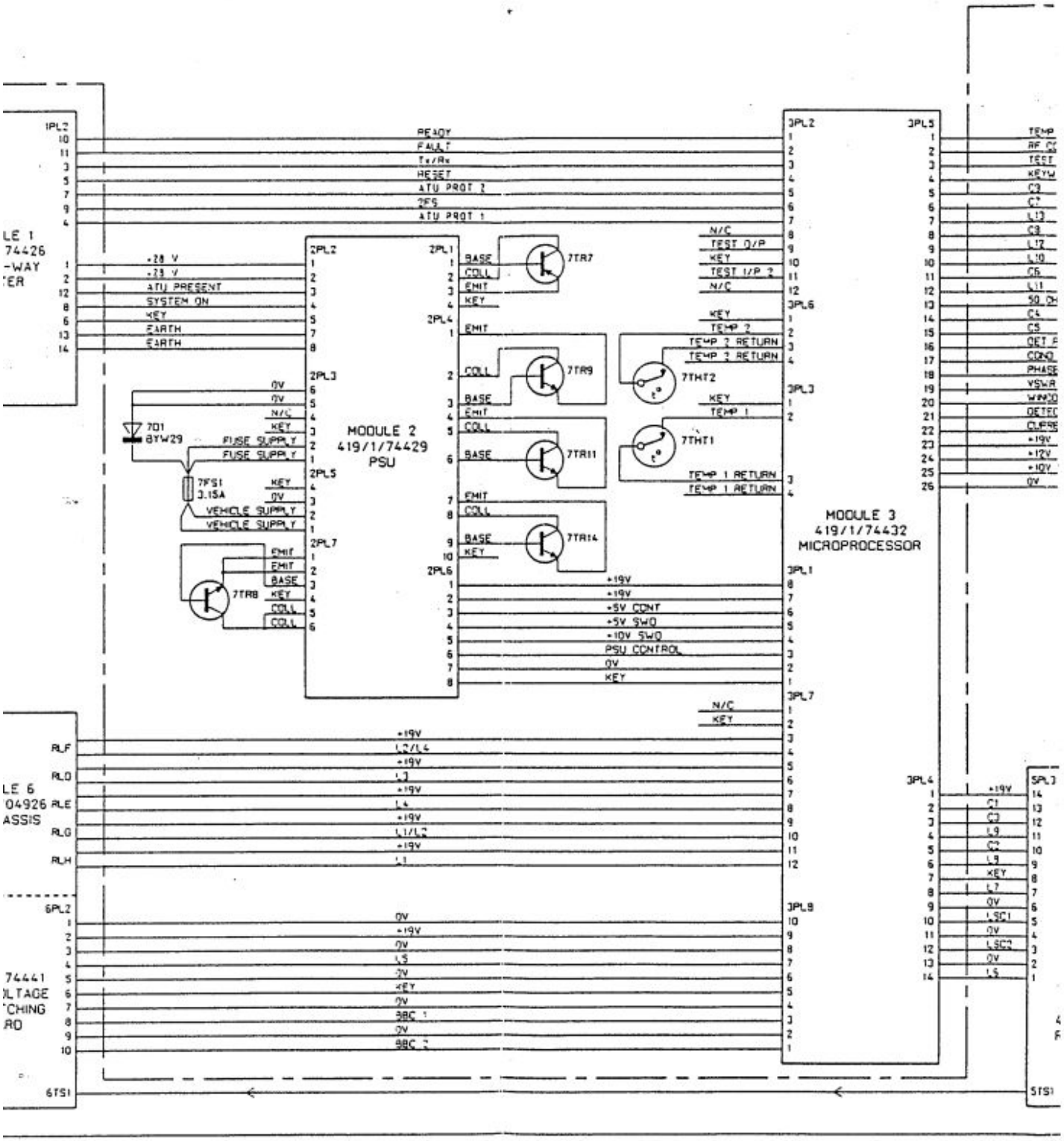

FIGURE 1008 - HF ATU EQUIPMENT CONNECTION DIAGRAM

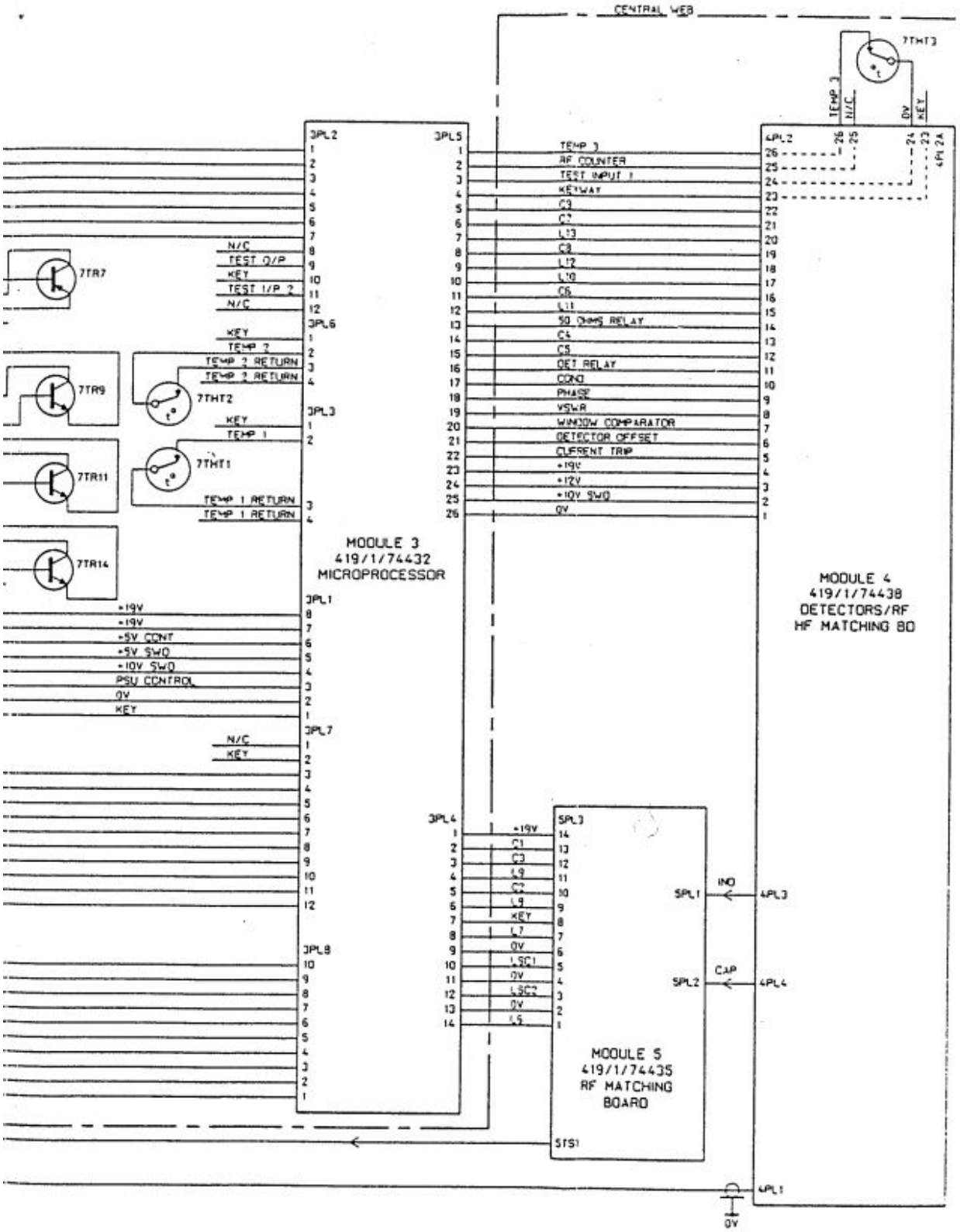

:UIPMENT CONNECTION DIAGRAM