SIGNAL GENERATOR
MODEL SGI

INSTRUCTION MANUAL

PATON ELECTRICAL PTY. LTD.
90 VICTORIA STREET, ASHFIELD
Tel.: UA 1923, UA 1960, UA 1982.

1.0 List of Equipment

Item 1. One Palec Signal Generator.

Model SG1, complete with valves.

Dimensions: Length 14 inches.

Height $8\frac{3}{4}$ inches.

Depth $8\frac{1}{2}$ inches.

Weight: 29 lbs.

Item 2. One Coaxial Output Cable.

Item 3. One Dummy Antenna.

Item 4. One Pair Output Leads.

Item 5. One Instruction Manual

Schedule of Instructions

SECTION 1. Page

LIST OF EQUIPMENT .. .. Cover ii.

SECTION 2.

DESCRIPTION 2

2.1 Purpose 2

2.2 Frequency Range 2

2.3 Shielding 2

2.4 Output 2

2.5 Power Supply 2

SECTION 3.

PRINCIPLES OF OPERATION 2

3.1 Functional Circuit 2

3.2 Schematic Circuit 3

3.21 Carrier Oscillator 3

3.22 Modulated Amplifier 3

3.23 Radio Frequency Vacuum Tube Voltmeter 3

3.24 Attenuator 4

3.25 Modulating Oscillator 4

3.26 Audio Frequency Vacuum Tube Voltmeter 5

3.27 Power Supply 5

SECTION 4.

OPERATING INSTRUCTIONS 5

4.1 Installation 5

4.11 Valves 5

4.2 Operating Controls 5

4.21 Meter Zero Set 5

4.22 Function Switch 6

4.23 Meter Switch 6

4.24 Carrier Control 6

4.25 Attenuator Scale Switch 6

4.26 Attenuator Multiplier 6

Page

4.27 Modulation Control 6

4.28 Band Switch 6

4.3 Output Voltage 6

4.31 Meter Zero Adjustment 6

4.32 Electrical Zero Adjustment .. 6

4.33 Output Level 7

4.4 Modulation 7

4.41 Internal 7

4.42 External 7

4.421 Power Requirements .. 7

4.422 Frequency Response .. 7

4.43 Audio Frequency Distortion .. 7

4.5 Connections to Receiver 7

4.51 Dummy Antenna 8

SECTION 5.

MAINTENANCE 8

5.0 Maintenance 8

5.1 Major Repairs 8

5.2 Disassembly 8

5.3 Valves 8

5.31 Carrier Oscillator 8

5.32 Modulated Amplifier 9

5.33 Carrier Vacuum Tube Voltmeter 9

5.331 Procedure 9

5.34 Modulating Oscillator 9

5.35 Audio Frequency Vacuum Tube Voltmeter 10

5.36 Power Supply Rectifier 10

5.4 Frequency Calibration 10

SECTION 6.

VOLTAGE ANALYSIS 11

SECTION 7.

SCHEDULE OF COMPONENTS .. 12-14

Section 2—DESCRIPTION

2.1 PURPOSE.

The Palec Signal Generator is an instrument for producing radio frequency oscillations over a wide frequency band and is arranged and shielded so that voltages of known magnitude may be obtained at the output connector. The instrument is designed primarily for the development and testing of radio receivers.

2.2 FREQUENCY RANGE.

The frequency range is from 150 Kc/s to 30 Mc/s. This range is covered in six bands, which are selected by a switch on the front panel. Within each band the frequency is varied by a split-stator condenser in a Colpitts oscillator circuit. The six bands are as under and approximately four per cent. overlap is provided at the end of each band.

A	150 Kc/s	— 360 Kc/s.
B	360 Kc/s	— 850 Kc/s.
C	850 Kc/s	— 2 Mc/s.
D	2 Mc/s	— 5 Mc/s.
E	5 Mc/s	— 12 Mc/s.
F	12 Mc/s	— 30 Mc/s.

The shape of the condenser plates approaches a straight-line-logarithmic law and the frequency change is therefore linearly proportional to dial rotation, except at the extremities of each band, where some departure from the true logarithmic law is noticeable. The dial is direct reading in frequency over the entire range and may be set with an accuracy better than one per cent. without calibration.

2.3 SHIELDING.

In order to provide accurate output calibration, it is essential that leakage from the instrument should be negligible. Unit construction, with single point earthing between shields, together with filtering of each conductor passing into the oscillator box has been employed. Leakage is well below 0.5 microvolt at 30 Mc/s when the instrument is connected to the receiver through the output cable only, and decreases with frequency. Direct low reactance connection between generator and receiver reduces this leakage still further.

2.4 OUTPUT.

The output is continuously variable from less than 0.5 microvolt to 1.0 volt over the frequency range 150 Kc/s to 5Mc/s, covered by bands A to D. Bands E and F cover the range 5 Mc/s to 30 Mc/s and a maximum output of 0.1 volt is available from the instrument within these bands. The output at the coaxial connector is the product of the reading of the carrier vacuum tube voltmeter and the attenuator multiplier setting.

The output may be obtained modulated or unmodulated. Modulation is adjustable between 0 and 100 per cent. and an internal modulating source at 400 cycles per second is provided. Provision is also made for the application of an external modulating voltage.

2.5 POWER SUPPLY.

Signal Generator Model SGI is designed for operation from an alternating current supply of 210 to 270 volts RMS at frequencies from 40 to 60 cycles per second.

Section 3—PRINCIPLES OF OPERATION

3.1 FUNCTIONAL CIRCUIT.

The block diagram in Figure 1 shows the functional arrangement of the Generator. The radio frequency voltage is developed in the carrier oscillator and impressed on the attenuator through an amplifier valve. The attenuator supplies output voltages as indicated by the six multiplying factors engraved on the panel and input to it is measured by the carrier voltmeter. The voltage output from the amplifier stage is controlled by the carrier control potentiometer. The overall attenuation may be increased by a ratio of 3 : 1 by setting the "Attenuator Scale Switch" at position "B". Correct output is now the product of the attenuator multiplier setting and the reading of the carrier voltmeter on scale "B".

The audio frequency modulating voltage is impressed on the control grid of the amplifier valve and measured by means of the audio frequency vacuum tube voltmeter. This modulating voltage is either generated internally by the modulating oscillator or impressed from an external source. When external modulation is applied the modul-

ating oscillator valve is used as a cathode coupled amplifier.

3.2 SCHEMATIC CIRCUIT.

The complete circuit diagram of the model SGI Signal Generator is shown in Figure 2. Figures 3 to 11 show, with the omission of all non-essential parts, the basic elements of the carrier oscillator, the modulated amplifier stage, the radio frequency vacuum tube voltmeter, the attenuator, the modulating oscillator, the audio frequency vacuum tube voltmeter, the power supply, the modulating oscillator as a cathode coupled amplifier when arranged for external modulation and the dummy antenna. A brief description of the operation of these circuits is given below.

3.21 Carrier Oscillator.

The carrier oscillator shown in Figure 3 employs a conventional Colpitts circuit and delivers from 3.5 to 9.0 volts of the carrier frequency to the grid of the modulated amplifier valve. This oscillator uses one section of 6SN7GT valve (V1) and is completely enclosed with the modulated amplifier and radio frequency voltmeter in a shield within the instrument. The six coils used are arranged around a switch which selects the coil in use, at the same time effectively short circuiting those not in use. Each coil is provided with a powdered iron slug for the adjustment of its inductance. Across each coil is connected a 0-30 $\mu\mu$f air-dielectric trimming condenser for the adjustment of calibration at the high frequency end of each band. The coils are tuned by a split-stator condenser (C 1-2) of 11-430 $\mu\mu$f each section.

The entire coil unit is enclosed in a cylindrical copper shield, provision being made for the adjustment of the trimming condensers and slugs without the necessity of removing this shield or the cover from the shield enclosing the oscillator itself. Located outside the coil shield and actuated by the switch selecting the various frequency ranges, is a further switch section. This switch section serves to switch voltage dividers applying suitable plate voltages to the oscillator to provide substantially constant output from the modulated amplifier stage over the frequency range of the instrument. The voltage dividers are so proportioned that the current drawn from the power supply is constant on all bands. The oscillator plate voltages are selected so that approximately 1.5 volts RMS of carrier frequency is available at the output of the modulated amplifier on all bands.

3.22 Modulated Amplifier.

The circuit of the modulated amplifier is shown in Figure 4. This stage consists of a 6AC7/1852 valve (V2) connected as a pentode amplifier with 2,000 ohms load resistance (R23) and a combination of self and fixed bias. Self bias is provided by a 500 ohm resistor (R20) in series with a 20 ohm resistor (R21), the 500 ohm section being bypassed for radio frequencies by a .01 μf condenser (C17). The un-bypassed resistor of 20 ohms is connected in the cathode circuit to reduce Miller effect in this stage, thereby reducing frequency modulation of the oscillator. The screen grid of the amplifier stage is connected to the high tension supply through a 25,000 ohm resistor (R22) and bypassed for radio frequencies by a .01 μf condenser (C16). The output across the 2,000 ohm resistor (R23) is fed through a 2,000 $\mu\mu$f condenser (C15) to the carrier control potentiometer (R18) and thence to the attenuator. A1.5 millihenry choke (L7) is connected in parallel with the potentiometer and this, in conjunction with the 2,000 $\mu\mu$f condenser, provides a high pass filter to remove the audio frequency component resulting from modulation. The carrier voltmeter is connected across the input to the attenuator.

Modulation is accomplished by introducing an audio frequency voltage into the grid circuit of the modulated amplifier valve in series with the carrier frequency voltage. The amplifier stage is fed from the grid section of the oscillator coil by a 15 $\mu\mu$f coupling condenser (C9) and frequency modulation under these conditions is negligible. The modulation voltage from the secondary of the modulation transformer is applied across the 25,000 ohm modulation control potentiometer (R41), thence through a 250,000 ohm resistor (R19) to the grid of the modulated amplifier. The modulation voltmeter is connected from the slider of the modulation potentiometer to ground and indicates the voltage supplied to the grid of the amplifier.

3.23 Radio Frequency Vacuum Tube Voltmeter.

The radio frequency voltage developed across the input to the attenuator is measured by the vacuum tube voltmeter shown in Figure 5. One section of 6SN7GT valve (V1) is used as this voltmeter, which is of the full wave square law anode bend type, using a 200 micro-amp meter as an indicator. With carrier voltage applied to the grid, plate current will change by an amount proportional to the average voltage applied, and the meter will read.

The 1,500 ohm potentiometer (R26) is used to calibrate the voltmeter and the 50 ohm potentiometer (R29), located on the front panel, adjusts the bias to the value required for proper balance, and must be adjusted from time to time

to compensate for line voltage variations, as well as changes in the voltmeter tube. The resistors R25 (70,000 ohms), R24 (10,000 ohms) and R28 (500 ohms) form a voltage divider which delivers about 40 volts to the plate of the tube with the full high tension voltage of 330 volts applied to R25. The resistors R24, and R28 and R29 are so proportioned that their ratio is approximately equal to the amplification factor of the valve and under these conditions the voltmeter is largely independent of variations in high tension voltage. The current through the divider circuit is altered by these variations, however, and adjustment must be made to the "Meter Zero Set" 50 ohm potentiometer (R29) to compensate for this.

The meter is fitted with two scales, one graduated 0-12 and the other 0-4. These scales correspond with positions "A" and "B" of the "Attenuator Scale Switch," and are lettered accordingly. With the "Attenuator Scale Switch" on position "A" readings from 4 to 12 may be accurately made using meter scale "A". When, however, meter readings below 4 are required, position "B" of the "Attenuator Scale Switch" and scale "B" of the meter should be used, as the crowding of meter scale "A" below 4 results in poor accuracy. Values below 1 may now be read accurately.

The design of the voltmeter is such that its response is accurate within ±5% over the frequency range of the instrument.

3.24 Attenuator.

The setting of the attenuator shown in Figure 6 controls the amplitude of the carrier voltage at the output connector. The system is almost entirely resistive throughout and attenuation is largely independent of frequency. The attenuator system is strictly a ratio operating device, but when used in conjunction with the carrier voltmeter the product of the two readings is the output voltage in microvolts. Six settings are provided and are given multiplying factors from X1 to X100,000.

The attenuator proper consists of a brass casting arranged with six fins on the rear section, these fins being enclosed by a close fitting shield. Each sector created by these fins has an insulated contact passing through the wall for switching purposes. The input is fed through a coaxial cable to the first contact and from there to the second by a 450 ohm non-inductive carbon resistor (R5). A further 91 ohm resistor (R10) connects to ground from this point. The third section is fed from here through a resistance of 100 ohms (R4) and connected to ground by a 12.3 ohm resistance (R9). All further stages are identical with the exception of the last position (X1) which is connected to ground through 11 ohms (R6). The nominal impedance of the attenuator is therefore 11 ohms on positions X1 to X1,000, 50 ohms on X10,000 and 500 ohms on the X100,000 position.

The silver plated contact studs connecting to the junctions of the above resistors pass through the casting to a further shielded compartment where a brass plate carrying an insulated contact, which is spring loaded, is arranged to rotate so that the contact makes connection in turn with one of the six studs previously mentioned. A slip ring is provided to make connection to this rotating contact and a detent mechanism is fitted to locate the plate in any of the required six positions. The output is taken from a wiper, bearing on the slip ring, and connected through a short coaxial cable to the output connector on the front panel.

The characteristics of the attenuator are such that the attenuation does not vary more than 0.5 db. over the frequency range of the instrument.

3.25 Modulating Oscillator.

The modulating oscillator, employing a conventional Hartley type circuit, and using one section of the 6SN7GT valve (V3) is shown in Figure 7. An iron cored inductor is tuned to the frequency of 400 cycles by a 0.25 μf condenser (C34). The grid leak resistor (R34) is 2 megohms. The 50,000 ohm resistor (R38) is employed as a plate load and a 5,000 ohm resistor (R37) is connected in series with the plate blocking condenser (C35) to control the amplitude of oscillation. The secondary winding of the modulation transformer is connected to the "Modulation" control and to the "external modulation" terminals on the front panel. Approximately 8 volts of 400 cycle voltage with less than 2 per cent. total harmonic distortion is available at these terminals for external use.

To prevent carrier shift due to high tension voltage variations when the function switch is in the "unmodulated" position, an 80,000 ohm resistor (R40) is switched across the high tension supply to simulate the load impressed by the modulating oscillator.

With the function switch set for "external modulation" the modulating oscillator is connected as a cathode coupled amplifier, a breakdown circuit of which is shown in Figure 10. The plate of the valve is now connected directly to high tension and the cathode to ground through R35 and R36 of 3,000 and 7,000 ohms respectively. The grid is returned to the junction of these resistors through the 500,000 ohm resistor R39 and is fed from the external modulation terminals through a 0.1 μf condenser (C36). The 25,000 ohm modu-

lation control potentiometer (R41) is connected from cathode to ground in parallel with R35 and R36. Approximately 2.5 volts RMS is required at the external modulation terminals for 30 per cent. modulation. The response of this circuit does not vary more than 1 db. over the frequency range 30-10,000 cycles per second.

3.26 Audio Frequency Vacuum Tube Voltmeter.

The percentage modulation of the carrier frequency is determined by the modulation voltage applied to the control grid of the amplifier tube. The voltage required for 100 per cent. modulation is 7.1 volts RMS and this voltage is taken from modulation control potentiometer (R40) and measured by the audio frequency vacuum tube voltmeter shown in Figure 8. According to the position of the meter switch S3, the meter and associated circuit is switched from the carrier to modulation voltmeter and vice versa. The modulation voltmeter is identical with the carrier voltmeter described in paragraph 2.23, except that full scale deflection is adjusted to take place when 7.1 volts RMS is applied to the grid. To provide this a resistance (R31) of 25,000 ohms in series with a potentiometer of 15,000 ohms is used in the cathode circuit of this voltmeter tube. A 80,000 ohm resistance (R30) provides a bucking voltage to bring the meter to zero without input voltage. This resistor is adjusted so that the same setting of the "Meter Zero Set" control (50 ohm potentiometer, R29) applies for both modulation and carrier voltmeters. The meter scale has an additional range marked "modulation" and graduated each 10 per cent. from zero to 100 per cent. modulation. The accuracy of indication of percentage modulation is ± 5% to 80 per cent. modulation, but the accuracy between 80 and 100 per cent. modulation is somewhat more limited.

3.27 Power Supply.

The power supply, which is an integral part of this instrument is shown in Figure 9 to consist of a power transformer delivering 800 volts RMS centre tapped and rectified by a 6X5GT full wave rectifier (V4). The output from this rectifier is filtered by a resistance-capacity filter (C36, R43, C37). A voltage of 330 DC is available at the output of the filter under full load conditions. The total current drawn is 23 milliamperes. A further winding on the transformer provides 6.6 volts RMS for the heating of all tubes, including the rectifier. The primary winding of the transformer is tapped at 220, 240 and 260 volts and operation may be obtained satisfactorily on line voltages from 210 to 270 volts by the use of the appropriate tapping.

When the function switch is in the "off" position the centre tap of the transformer high voltage secondary is open circuited, thereby removing high tension voltage from all valves but allowing the heaters to remain hot. When this switch is on the "unmodulated" position an 80,000 ohm resistor (R40) is connected across the high tension supply in place of the modulating oscillator, the plate circuit of which is not connected in this position.

Section 4—OPERATING INSTRUCTIONS

4.1 INSTALLATION.

The Model SG1 Signal Generator is supplied with all valves fitted ready for use. Normally the instrument will be supplied with the power supply cable connected to the 240 volt tapping on the power transformer.

4.11 Valves.

The following valves are supplied with the instrument and are fitted in their sockets :—

Valve Type	Function	Location
6X5GT	Power Rectifier.	At rear of power supply chassis.
6SN7GT	Modulator and audio vacuum tube voltmeter.	At front of power supply chassis.
6SN7GT	Carrier oscillator and vacuum tube voltmeter.	At rear of oscillator compartment.
6AC7/1852	Modulated amplifier.	At front of oscillator compartment.

4.2 OPERATING CONTROLS.

Model SG1 Signal Generator is simple to operate. All dials, knobs and switches are clearly marked on the front panel.

4.21 Meter Zero Set.

Beneath the meter on the left hand side of the panel is the "Meter Zero Set" control. This control may require slight adjustment with changes in line voltage, but the same setting suffices for both carrier and modulation voltmeters and the adjustment should always be made with the "Meter Switch" on the "carrier" position. As the generator is tuned over band F, considerable variation in oscillator current with a corresponding change in high tension voltage takes place, and this may cause slight variation in the zero setting of the meter. For maximum accuracy of reading on this band the meter zero

should be reset with the frequency dial set to the carrier frequency required.

4.22 Function Switch.

Beneath the "Meter Zero Set" control is located a function switch which has four positions, viz., "off", "unmodulated", "internally modulated" and "externally modulated". When in the "off" position, all high tension voltage is removed from the instrument, although the valves are still maintained in a heated condition. When this switch is in the "unmodulated" position high tension voltage is applied to all valves with the exception of the modulating oscillator, and unmodulated output is available.

By setting the function switch on the "internally modulated" position, high tension voltage is applied to the modulating oscillator valve and output modulated at 400 cycles per second is available. The 400 cycle modulating voltage is now available from the "external modulation" terminals.

With the function switch on the externally modulated position the modulating oscillator is connected as a cathode coupled amplifier and the application of voltage to the "External Modulation" terminals will provide modulation of the carrier.

4.23 Meter Switch.

A two position switch is located to the right of the function switch and switches the meter and associated circuits from the carrier to modulation voltmeter and vice versa. The operation of this switch is self explanatory.

4.24 Carrier Control.

Beneath the main frequency dial a "Carrier" control is provided. This control takes the form of a 1,000 ohm potentiometer controlling the input to the attenuator and carrier voltmeter. It is used in conjunction with the attenuator to provide any output level within the range of the instrument.

4.25 Attenuator Scale Switch.

To the right of the "Carrier" control is the "Attenuator Scale Switch". This switch is normally set on position "A" and the appropriate meter scale is read. When, however, it is desired to read values on the meter below 4, it is desirable to place this switch on position "B" where the overall attenuation is increased by 3 : 1 and meter scale "B" is used. It is then possible to read values on the scale below 1 with good accuracy. An example of the necessity for this operation may occur when making a measurement of the sensitivity of a receiver. With the "Attenuator Multiplier" on X1 and the "Attenuator Scale Switch" on "A" the "Carrier" control is adjusted for standard output from the receiver. It may be found that the meter now indicates less than 4, in which case it is desirable to place the "Attenuator Scale Switch" on position "B" and increase the "Carrier" control until standard output is again obtained. The meter scale "B" is now read and as the deflection will be several times that on scale "A" greater accuracy is attained.

The "Attenuator Scale Switch" should not be used on position "B" when the attenuator multiplier is set on the X100,000 position, particularly at high frequencies, as the shunting effect of the output cable, which is across the input to the attenuator in that position, renders scale "B" inaccurate.

4.26 Attenuator Multiplier.

The operation of this switch is self-explanatory. When in any position the figure indicated is used as a multiplier for the carrier voltmeter scale in use.

4.27 Modulation Control.

Immediately above the attenuator multiplier is the "Modulation" control. This control is a 25,000 ohm potentiometer capable of controlling both internal and external modulating voltages fed to the modulated amplifier. With the "Meter Switch" on the "modulation" position this control may be used to set the modulation percentage at the desired value.

4.28 Band Switch.

On the top right-hand corner of the instrument is the Band Switch, having six positions labelled alphabetically A to F and also marked with the frequency range.

The main frequency dial has six bands, individually calibrated and lettered to correspond with the ranges selected by the Band Switch. The dial may be set with an accuracy of better than one per cent. without calibration. Control of the frequency dial is through a reduction drive fitted with a large control knob.

4.3 OUTPUT VOLTAGE.

4.31 Meter Zero.

With all power off the indicating meter should read zero. A mechanical zero adjustment is provided in the meter itself.

4. 32 Electrical Zero Adjustment.

With the Function Switch in the "off" position

the meter will read a fraction of full scale, particularly when the "Meter Switch" is in the "carrier" position. When the function switch is in the "unmodulated" or other positions, the meter will fall back to zero if both "Carrier" and "Modulation" controls are turned fully counter-clockwise. It is recommended that the Function Switch be set on "internal modulation" with the "Carrier" and "Modulation" controls in a fully counter-clockwise position and the "meter zero set" adjusted with the "Meter Switch" on the "carrier" position. Turning the "Meter Switch" to the "modulation" position shoud cause no appreciable change in the meter zero.

4.33 Output Level.

By advancing the "Carrier" control in a clockwise direction it should now be possible to bring the meter to better than full scale on any of the bands A to D. It will be found that the "Attenuator Scale Switch" has a great effect on meter reading and this switch should normally be kept on Scale "A" and only turned to scale "B" when the meter indication is below 4 on scale "A". It will also be found that the position of the Attenuator Multiplier will have some effect on the reading of the carrier voltmeter on the X100,000 position. It should, however, be possible to obtain full scale deflection of the carrier voltmeter at all frequencies within bands A to D with the Attenuator Multiplier on the X100,000 position and the "Attenuator Scale Switch" on scale "A". On bands E and F it will be found that only 0.4 to 0.6 volt is available under these conditions, and it is recommended that the X10,000 position be used on these bands giving a maximum output of 0.1 volt. Scale "B" should not be used on any band when the "attenuator multiplier" is in the X100,000 position.

4.4 MODULATION.

4.41 Internal.

For internal 400 cycle modulation set the Function Switch to the "internal modulation" position and the "Meter Switch" to "modulation". The "Modulation" control may now be adjusted to provide the desired percentage modulation which will be indicated by the meter on the lower scale (coloured red). With the Function Switch on the "internal modulation" position approximately 10 volts RMS of 400 cycle voltage will be available at the "External Modulation" terminals.

4.42 External.

With the Function Switch set on the "external modulation" position an external voltage may be applied to the "External Modulation" terminals. The "Modulation" potentiometer may be used to control this voltage and the modulation percentage will be indicated on the meter when the "Meter Switch" is on the "modulation" position.

4.421 Power Requirements.

At any modulation frequency between 30 and 10,000 cycles per second the input impedance of the "External Modulation" terminals is 500,000 ohms, and approximately 8 volts RMS is required at these terminals for 100 per cent. modulation. Modulation percentage is a linear function of the voltage applied, 2.4 volts therefore providing 30% modulation. The 6SN7GT valve previously used as a modulating oscillator is used as a cathode coupled amplifier when the instrument is arranged for external modulation. It is recommended that the 8 volts RMS necessary at the terminals for 100 per cent. modulation should not be greatly exceeded in the interests of minimum distortion within the cathode coupled stage.

4.422 Frequency Response.

The external modulation circuit has been designed to provide a response which does not deviate more than 1 db. within the range 30 cycles to 10 kc/s.

4.43 Audio Frequency Distortion.

The envelope distortion introduced by modulating the amplifier stage increases rapidly with percentage modulation. The distortion is less than 3 per cent. up to 50 per cent. modulation and increases to approximately 8.5 per cent. at 80 per cent. modulation.

4.5 CONNECTIONS TO RECEIVER.

A coaxial cable two feet in length is supplied for the purpose of connecting the instrument to the receiver. To this cable may be attached either a dummy antenna or a pair of alligator clips. The coaxial cable is of 78 ohms impedance and is furnished with female coaxial connectors at either end. One end of this cable is intended for connection to the instrument and the other either to the dummy antenna or the 4 inch leads fitted with alligator clips, to which is fitted a suitable connector.

The coaxial output cable has a capacity of 60 $\mu\mu$f and is approximately 1/16 of a wavelength long at the highest operating frequency (30 Mc/s).

Two errors are introduced when the cable is attached to the instrument: firstly, with the cable unterminated the capacitive reactance shunts the attenuator section in use and, secondly, standing waves occur on the cable at the higher frequencies.

On the four lower attenuator settings the re-

active shunting is of little consequence (0.6% at 30 Mc/s) as the nominal impedance of these sections, being 11 ohms, is low in comparison with the reactance of the cable at all frequencies. On the X10,000 position, however, where the impedance is 50 ohms, an error which increases with frequency is introduced, the reactive shunting of the cable causing the voltage at the panel connector to be 14 per cent. (1.14 db.) down at 30 Mc/s. On the X100,000 position the output voltage at the higher frequencies is limited by the shunting reactance of the cable, but as the carrier voltmeter is connected at this point the voltage at the panel connector is known. The above holds good only when the "Attenuator Scale Switch" is on position "A" and as indicated in paragraph 4.25, scale "B" should not be used in conjunction with the X100,000 multiplier position.

With the cable unterminated standing waves thereon are such that at 30 mc/s the voltage at the unterminated end is approximately 0.7 db. greater than at the panel connector. Should the operator desire to render these errors independent of frequency the cable may be terminated by 78 ohms of pure resistance. Under these conditions the output from the cable will be 11.4 per cent. or 0.94 db. down on the X1 to X1,000 multiplier settings, and 39 per cent. or 2.9 db. down on the X10,000 setting. Error due to standing waves on the cable should now be negligible provided the terminating resistance is 78 ohms and truly resistive.

The use of the X100,000 multiplier position with the cable terminated is unfeasible as the output will become less than from the X10,000 position.

Caution.

Care must be taken to prevent the introduction of voltages back into the attenuator from the circuit under test. The resistance of the attenuator is 11 ohms on the X1 to X1,000 settings of the multiplier and 50 ohms on the X10,000 setting. Currents greater than 70 milliamperes may overload the carbon resistors employed and cause permanent changes of calibration.

4.51 Dummy Antenna.

For many tests on receivers a dummy antenna should be employed to simulate the characteristics of the receiving antenna. A Universal Dummy Antenna is supplied with the instrument, and this is suitable for use with receivers, the frequency coverage of which fall within the range of the Generator.

It has been designed in accordance with the specifications recommended in the "Standards on Radio Receivers" (1938) of the Institute of Radio Engineers (U.S.A.). Figure 11 shows the connections of the two condensers of 200 and 400 $\mu\mu$f, the 20 microhenry inductance and the 400 ohm resistor.

Section 5—MAINTENANCE

5.0 MAINTENANCE.

The only parts of the Palec Signal Generator which are subject to wear or deterioration and which require periodical attention are the valves, switches and carbon potentiometers. Valves and potentiometers are standard items and may be replaced by the user. The special switches required may be obtained for replacement from the manufacturer.

5.1 MAJOR REPAIRS.

Should it be necessary for any reason to undertake major repairs to the instrument, it is recommended that it be returned to the factory, where special equipment is available.

5.2 DISASSEMBLY.

To remove the instrument from its case it should be placed with the panel uppermost and the 14 screws surrounding the front of the case removed. The instrument may now be withdrawn from the case.

5.3 VALVES.

The locations of the four valves within the instrument are given in paragraph 4.11. Should it be necessary to replace any of these valves, adjustments to the various circuits may be necessary. Instructions for making these adjustments are given below.

All voltage measurements have been made with a "Palec" Major multimeter, unless otherwise noted. This instrument has a sensitivity of 1000 ohms per volt on both AC and DC ranges and employs a copper oxide rectifier for AC measurements. Average voltage readings are given in each instance.

5.31 Carrier Oscillator.

The requirement of this oscillator which uses one section of the 6SN7GT valve (V1) is that it should produce output voltages within $\pm$ 10 per cent. of the values required at plate voltages provided by the three voltage dividers. With average valves it will be found that no difficulty is experienced in attaining this requirement. Given below are the plate voltages measured at the junction of the 40,000 ohm plate load resistor R11 and the voltage dividers, for the

various bands. Also given is the oscillator output voltage measured between the grid end of the oscillator coil and ground taken with a peak reading vacuum tube voltmeter. Average plate current is also given.

Band	Plate Voltage	Output Voltage	Plate Current
A	27	4.2–5.0	0.19–0.22 mA.
B	27	3.5–4.1	0.2 –0.21 mA.
C	68	4.0–5.8	0.61–0.68 mA.
D	68	4.0–5.8	0.61–0.68 mA.
E	140	4.6–7.0	1.9 –2.0 mA.
F	325-330	6.6–9.0	5.2 –5.4 mA.

The dividers serve to equalise the load on the power supply as far as is possible, and the current drain normally varies from 5.2 to 5.5 milliamperes over the entire frequency range. The heater voltage measured at the socket is 5.8 volts RMS.

The replacement of this valve will usually call for re-calibration of the main frequency dial. Instruction for making this adjustment is given in paragraph 5.5.

5.32 Modulated Amplifier.

The 6AC7/1852 Modulated Amplifier valve may be replaced without the necessity for re-calibration of the frequency dial, and will have little effect on the output level. Satisfactory operation is being obtained when 1.2 volts or more is available across the input to the attenuator over bands A to D with the Attenuator set on scale "A" and the X100,000 position and the output cable connected. The "Carrier" control should be in the maximum clockwise position.

Voltages applies to this valve are as under :

Heater : 5.8 volts RMS.
Plate to ground : 315 volts DC.
Screen grid to ground : 275 volts DC.
Cathode to ground : 4.5 volts DC.

A fixed grid bias is also applied in series with the modulation voltage, but this is not readable except with an electronic voltmeter of at least 10 megohms input resistance. The voltage may be checked across 100 ohm resistor R44 in the power supply and should be 2.2 volts DC.

5.33 Carrier Vacuum Tube Voltmeter.

One section of the 6SN7GT valve (V1) is used for this voltmeter, which measures 0-1.2 volts RMS. The grid of the voltmeter tube is connected directly across the input to the attenuator. Electrical zero of this voltmeter is prone to change with changes in line voltage and compensation for this may be made with the "Meter Zero Set" 50 ohm potentiometer R29 on the front panel.

Should the emission of this valve deteriorate or should the valve have to be replaced, it may be necessary to make adjustment to R26 to correct the sensitivity of the voltmeter or R27 to allow the electrical zero set to coincide with that for the modulation voltmeter.

5.331 Procedure.

The procedure for adjusting the carrier vacuum tube voltmeter is as follows : Set the meter zero with the mechanical adjustment provided in meter with all power off. Allow time for valve heaters to cool before making this adjustment.

After the power has been on for about five minutes set the Function Switch to the "internal modulation" position and the meter switch to the "carrier" position. Set the frequency dial to 1 Mc/s with the band switch on band "C," "Attenuator Scale Switch" on "A" and Attenuator Multiplier on the X100,000 position, turn the "Modulation" control in the maximum anti-clockwise direction.

A vacuum tube voltmeter which is correct at 1 Mc/s and with a range of say, 0-1.5 volts RMS may now be connected to the output connector with leads as short as possible. This voltmeter should be of the true RMS reading type for greatest accuracy. A peak reading voltmeter will read high, due to the presence of harmonics in the 1 Mc/s carrier voltage.

The "Carrier" Control may now be advanced until 1.2 volts is read at the output connector. Calibration potentiometer R26 may now be adjusted until the carrier voltmeter reads 12, or full scale deflection. A reduction in resistance of R26 will increase the voltmeter reading and vice versa.

When the above adjustments have been made it may be found that the electrical zero for this voltmeter does not coincide with that for the modulation voltmeter without adjustment of the zero set control R29. Adjustment of the 10,000 ohm resistor R27 will correct this discrepancy and should be increased in value to provide an increase in meter reading.

The approximate voltages appearing at the carrier voltmeter socket under normal operating conditions are as follows :—

Heater : 5.8 volts RMS.
Plate to ground : 40 volts DC.
Cathode to ground : 2.2 volts DC.

5.34 Modulating Oscillator.

The 6SN7GT valve (V3) used as the modulating oscillator should be replaced when it no longer provides adequate modulating voltage with the "Modulation Control" set as maximum. A satisfactory valve will produce about 10 volts across the secondary of the modulation transformer.

Approximate voltages at the socket of this valve are as follows :

Heater : 6.6 volts RMS.
Plate : 150 volts DC.

The second section of this valve is used as the modulation vacuum tube voltmeter and it is unlikely that the oscillator section will fail to give

the required output until after the voltmeter section has failed to give satisfactory service.

5.35 Audio Frequency Vacuum Tube Voltmeter.

Replacement of the 6SN7GT voltmeter valve (V3) or loss of emission therein may make adjustments to the associated circuit necessary.

Firstly, the mechanical zero adjustment in the meter should be checked with all power off, after which the electrical zero should be set with the meter switch on "carrier" and the "Carrier" Control in a maximum anti-clockwise position. Switching the "Meter Switch" to the "modulation" position should cause no change in the zero setting provided the "Modulation" Control is in a maximum anti-clockwise position. Should any variation of zero position occur it is recommended that the zero be reset with the meter switch on "modulation" until meter calibration has been adjusted.

Calibration may be compared with a vacuum tube voltmeter or a copper oxide rectifier instrument which should, however, be used on its 50 volt range to minimise shunting of the circuit.

The Function Switch should be set for "internal modulation" and the calibration voltmeter connected from the rotor of the "Modulation" Control potentiometer R41 to ground. The "Modulation" Control R41 may now be set for an indication of 7.1 volts on the calibrating voltmeter and should the modulation voltmeter not indicate 100 per cent. modulation adjustment may be made to 15,000 ohm calibrating potentiometer R47. An increase in resistance value will cause a decrease in meter reading.

After adjustment of R47 it may be found that the zero settings for carrier and modulation voltmeters do not coincide, in which case adjustment should be made to R30. It is recommended that the zero be set on the "carrier" position and R30 adjusted until zero is obtained on the modulation position. An increase of resistance of R30 causes an increase in meter reading.

Should an oscillograph, capable of handling 1 volt at 150 kc/s be available, better accuracy of setting may be obtained by connecting the output cable to the oscillograph and measuring the percentage modulation on the screen thereof. This measurement should be carried out at 30 per cent. modulation.

Voltages at the modulation voltmeter socket are approximately as under :

Heater : 6.6 volts RMS.
Plate to ground : 40 volts DC.
Cathode to ground : 2.1 volts DC.

5.36 Power Supply Rectifier.

When emission from the 6X5GT valve (V4) falls off sufficiently to reduce the high tension voltage at the output of the filter to 300 volts it will be necessary to replace this valve.

Voltages at the socket of the 6X5GT valve are approximately as under :

Heater : 6.6 volts RMS.
Plates to ground : 410 volts RMS.
Cathode to ground : 480 volts DC.

The voltage at the output of the power supply filter is 330 DC.

5.4 FREQUENCY CALIBRATION.

Should it be necessary to replace the 6SN7GT valve (V1) used as a carrier oscillator or should the instrument be damaged or the position of the oscillator wiring altered it may be necessary to make adjustments to correct the frequency calibration.

Each coil is fitted with a powdered iron slug for the adjustment of its inductance and shunted by a 0-30 uuf trimming condenser (C3-C8) for the adjustment of calibration at the high frequency end of each band. These adjustments are accessible after the instrument has been removed from its case by removing the plate attached to the rear of the oscillator box. The oscillator box cover should not be removed as its presence has some effect on frequency calibration.

Firstly, the cursor must be set so that with the dial at maximum travel toward the high frequency end it is coincident with the small line marked "S" between Bands D and F. Adjustment may be made by loosening the screws fixing the shaft in the flexible coupling between the front panel and the oscillator box.

The powdered iron slugs are intended primarily as a means of adjustment at the low frequency end of each band, while the trimming condensers are used for adjustment of the high frequency end.

The output from the instrument should be compared with a known frequency and adjustments made preferably at the following frequencies in each band :—

Band	Adjust Slug	Adjust Condenser
A	180 kc/s.	340 kc/s.
B	420 kc/s.	800 kc/s.
C	1 mc/s.	1.5 mc/s.
D	2.5 mc/s.	5.5 mc/s.
E	6.0 mc/s.	11.0 mc/s.
F	14.0 mc/s.	28.0 mc/s.

It is preferable to adjust the slugs first, following with the adjustment of the condensers. It will be found that the adjustment of the condensers will have some effect on the low frequency calibration and some readjustment of the slugs will be necessary, the amount depending on the initial error in calibration.

Having made the above adjustments, frequency calibration should be within $\pm$ 0.5 per cent. at any point on the dial.

Section 6—VOLTAGE ANALYSIS

VALVE	PURPOSE	VOLTAGES.
6SN7GT	Carrier Oscillator	Heater 5.8 RMS. Plate—Band A 27 volts DC. Band B 27 volts DC. Band C 68 volts DC. Band D 68 volts DC. Band E 140 volts DC. Band F 320 volts DC.
6SN7GT	Carrier Voltmeter	Heater : 5.8 volts RMS. Plate : 40 volts DC. Cathode : 2.2 volts DC.
1852/6AC7	Modulated Amplifier	Heater : 5.8 volts RMS. Plate : 315 volts DC. Screen : 275 volts DC. Cathode : 4.5 volts DC.
6SN7GT	Modulating Oscillator	Heater : 6.6 volts RMS. Plate : 150 volts DC.
6SN7GT	Cathode Coupled Amplifier	Heater : 6.6 volts RMS. Plate : 330 volts DC. Cathode : 35 volts DC.
6SN7GT	Modulation Voltmeter	Heater : 6.6 volts RMS. Plate : 40 volts DC. Cathode : 2.1 volts DC.
6X5GT	Power Rectifier	Heater : 6.6 volts RMS Plates : 410 volts RMS. Cathode : 480 volts DC.

Section 7—SCHEDULE OF COMPONENTS

Circuit Symbol	Description	Item Number
	RESISTORS.	
R1	Resistor, 100 Ohms, 1/3 Watt, Wire Wound	
R2	Resistor, 100 Ohms, 1/3 Watt, Wire Wound	
R3	Resistor, 100 Ohms, 1/3 Watt, Wire Wound	
R4	Resistor, 100 Ohms, 1/3 Watt, Wire Wound	
R5	Resistor, 450 Ohms, 1/3 Watt, Wire Wound	
R6	Resistor, 11 Ohms, 1/3 Watt, Wire Wound	
R7	Resistor, 12.3 Ohms, 1/3 Watt, Wire Wound	
R8	Resistor, 12.3 Ohms, 1/3 Watt, Wire Wound	
R9	Resistor, 12.3 Ohms, 1/3 Watt, Wire Wound	
R10	Resistor, 91 Ohms, 1/3 Watt, Wire Wound	
R11	Resistor, 40,000 Ohms, 1 Watt, Carbon	
R12	Resistor, 6,000 Ohms, ½ Watt, Carbon	
R13	Resistor, 16,500 Ohms, ½ Watt, Carbon.	
R14	Resistor, 60,000 Ohms, 1 Watt, Carbon	
R15	Resistor, 55,000 Ohms, 1 Watt, Carbon	
R16	Resistor, 500,000 Ohms, ½ Watt, Carbon	
R17	Resistor, 1,000 Ohms, ½ Watt, Carbon	
R18	Potentiometer, 1,000 Ohms, Linear, Carbon	0T24
R19	Resistor, 250,000 Ohms, ½ Watt, Carbon	
R20	Resistor, 500 Ohms, ½ Watt, Wire Wound	
R21	Resistor, 20 Ohms, 1/3 Watt, Carbon	
R22	Resistor, 25,000 Ohms, 1 Watt, Carbon	
R23	Resistor, 2,000 Ohms, ½ Watt, Carbon	
R24	Resistor, 10,000 Ohms, ½ Watt, Carbon	
R25	Resistor, 70,000 Ohms, 1 Watt, Carbon	
R26	Potentiometer, 1500 Ohms, Wire Wound	0T15
R27	Resistor, 10,000 Ohms, ½ Watt, Carbon.	
R28	Resistor, 250 Ohms, ½ Watt, Wire Wound	ADJ
R29	Potentiometer, 50 Ohms, Wire Wound.	0T9
R30	Resistor, 70,000 Ohms, ½ Watt, Carbon	
R31	Resistor, 25,000 Ohms, ½ Watt, Carbon	
R32	Resistor, 500,000 Ohms, ½ Watt, Carbon	
R33	Resistor, 500,000 Ohms, ½ Watt, Carbon	
R34	Resistor, 2 Megohms, ½ Watt, Carbon	
R35	Resistor, 3,000 Ohms, ½ Watt, Carbon	
R36	Resistor, 7,000 Ohms, ½ Watt, Carbon	
R37	Resistor, 5,000 Ohms, ½ Watt Carbon	
R38	Resistor, 50,000 Ohms, 1 Watt, Carbon	
R39	Resistor, 500,000 Ohms, ½ Watt, Carbon	
R40	Resistor, 80,000 Ohms, 1 Watt, Carbon	
R41	Potentiometer 25,000 Ohms, Linear, Carbon	RK16
R42	Resistor, 500,000 Ohms, ½ Watt, Carbon	
R44	Resistor, 100 Ohms, ½ Watt, Wire Wound	
R45	Resistor, 40,000 Ohms, 1 Watt, Carbon	
R46	Resistor, 38,000 Ohms, 1 Watt, Carbon	
R47	Potentiometer, 15,000 Ohms, Wire Wound.	0T14

Circuit Symbol	Description	Number Item
	CONDENSERS.	
C1, C2	Condenser, Tuning, Split Stator	RK11
C3	Condenser, Trimming, 3-20 $\mu\mu$f	CD20
C4	Condenser, Trimming, 3-20 $\mu\mu$f	CD20
C5	Condenser, Trimming, 3-20 $\mu\mu$f	CD20
C6	Condenser, Trimming, 3-20 $\mu\mu$f	CD20
C7	Condenser, Trimming, 0-30 $\mu\mu$f	RK10
C8	Condenser, Trimming, 0-30 $\mu\mu$f	RK10
C9	Condenser, 15 $\mu\mu$f, 1,000 Volt, Mica	RK13
C10	Condenser, 100 $\mu\mu$f, 1,000 Volt, Mica	CD6
C11	Condenser, .1 μf, 200 Volt, Paper	RK12
C12	Condenser, .01 μf, 1,000 Volt, Mica	CD53
C13	Condenser, .01 μf, 1,000 Volt, Mica	CD53
C14	Condenser, .01 μf, 1,000 Volt, Mica	CD53
C15	Condenser, 2,000 $\mu\mu$f, 1,000 Volt, Mica	CD66
C16	Condenser, .01 μf, 1,000 Volt, Mica	CD53
C17	Condenser, .01 μf, 1,000 Volt, Mica	CD53
C18	Condenser, .01 μf, 1,000 Volt, Mica	CD53
C19	Condenser, Trimming, 0-30 $\mu\mu$f	RK10
C20	Condenser, .0005 μf, 1,000 Volt, Mica	RK14
C21	Condenser, .0005 μf, 1,000 Volt, Mica	RK14
C22	Condenser, .01 μf, 1,000 Volt, Mica	CD53
C23	Condenser, .01 μf, 1,000 Volt, Mica	CD53
C24	Condenser, .1 μf, 200 Volt, Paper	RK12
C25	Condenser, .01 μf, 1,000 Volt, Mica	CD53
C26	Condenser, .01 μf, 1,000 Volt, Mica	CD53
C27	Condenser, .25 μf, 400 Volt, Paper	CD65
C28	Condenser, 8 μf, 525 Volt, Electrolytic	CD50
C29	Condenser, .01 μf, 1,000 Volt, Mica	CD53
C30	Condenser, .1 μf, 400 Volt, Paper	CD60
C31	Condenser, .1 μf, 400 Volt, Paper	CD60
C32	Condenser, .1 μf, 400 Volt, Paper	CD60
C33	Condenser, .1 μf, 400 Volt, Paper	CD60
C34	Condenser, .25 μf, 400 Volt, Paper	CD65
C35	Condenser, .1 μf, 400 Volt, Paper	CD60
C36	Condenser, .1 μf, 400 Volt, Paper	CD60
C37	Condenser, 8 μf, 525 Volt, Electrolytic	CD50
C38	Condenser, 8 μf, 600 Volt, Electrolytic	CD50
C39	Condenser, .1 μf, 400 Volt, Paper	CD60
C40	Condenser, .1 μf, 400 Volt, Paper	CD60

Circuit Symbol	Description	Item Number
	VALVES.	
V1	Type 6SN7GT Valve	RK19
V2	Type 6AC7/1852 Valve	RK20
V3	Type 6SN7GT Valve	RK19
V4	Type 6X5GT Valve	VL2
	METER.	
M1	Type K216, 0-200 Microamp Meter	
	SWITCHES.	
S1	Coil Switch	RK4
S1	Voltage Divider Switch	RK3
S2	Attenuator Switch	SW52
S3	Attenuator Scale Switch	RK5
S4	Meter Switch	RK5
S5	Function Switch	RK2
	INDUCTORS	
L1	Tuning Coil, Band A	
L2	Tuning Coil, Band B	
L3	Tuning Coil, Band C	
L4	Tuning Coil, Band D	
L5	Tuning Coil, Band E	
L6	Tuning Coil, Band F	
L7	Inductance, 1.5 Millihenries	
L8	Choke, 20 Millihenries	
L9	Choke, 20 Millihenries	
L10	Choke, 350 Microhenries	
L11	Choke, 20 Millihenries	
L12	Choke, 20 Millihenries	
L13	Modulation Transformer, Secondary	PK61
L14	Modulation Transformer, Primary	
L15	Power Transformer, Heater Winding	RK18
L16	Power Transformer, High Tension Secondary	
L17	Power Transformer, Primary Winding	
L18	Filter Choke, 1.0 Millihenry	
L19	Filter Choke, 1.0 Millihenry	
L20	Filter Choke, Rola, 6/60	RK117

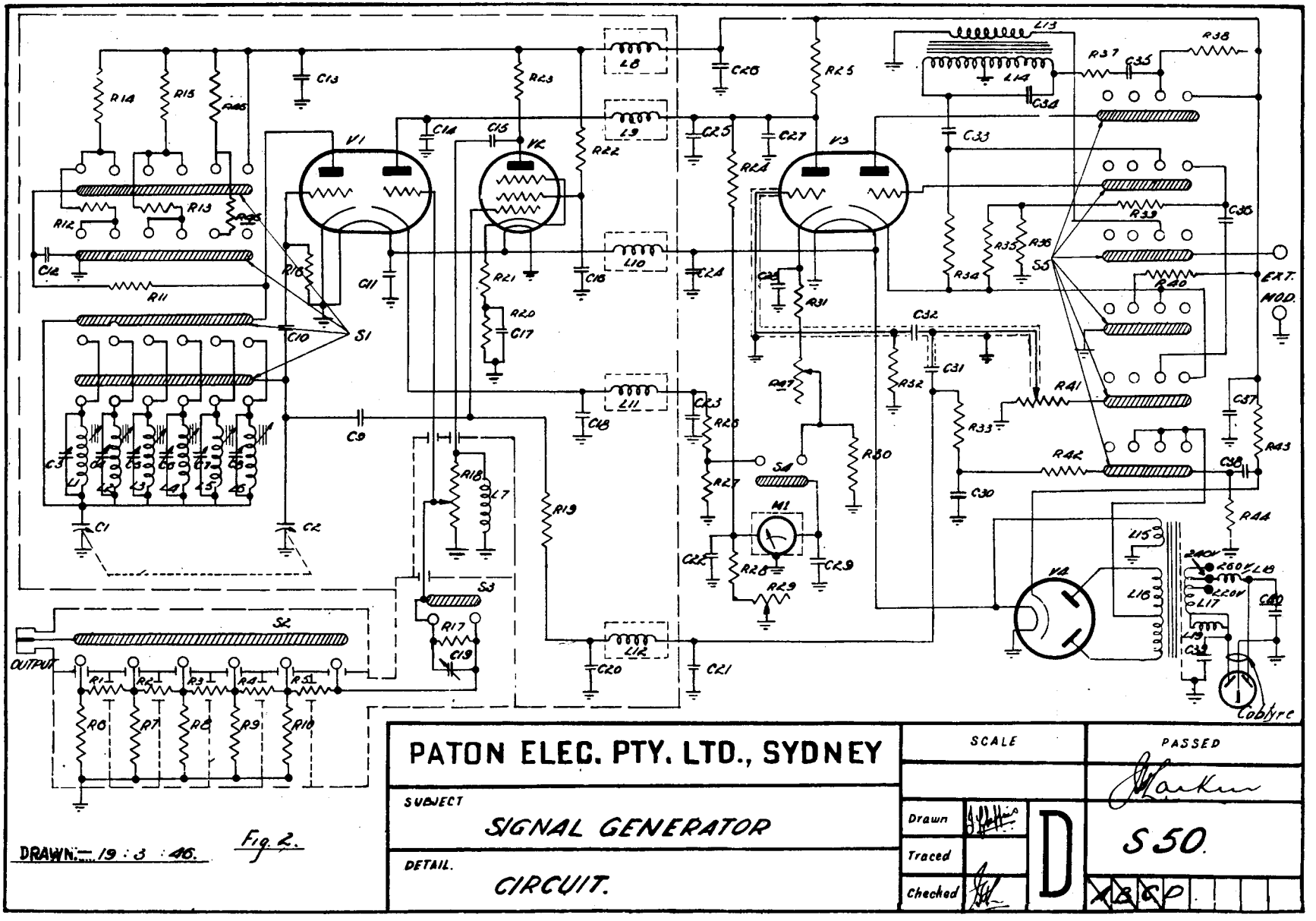

PATON ELEC. PTY. LTD., SYDNEY		SCALE	PASSED
SUBJECT: SIGNAL GENERATOR			
DETAIL: CIRCUIT.	Drawn	D	S 50.
	Traced		
	Checked		

DRAWN.— 19 : 3 : 46.

Fig. 2.

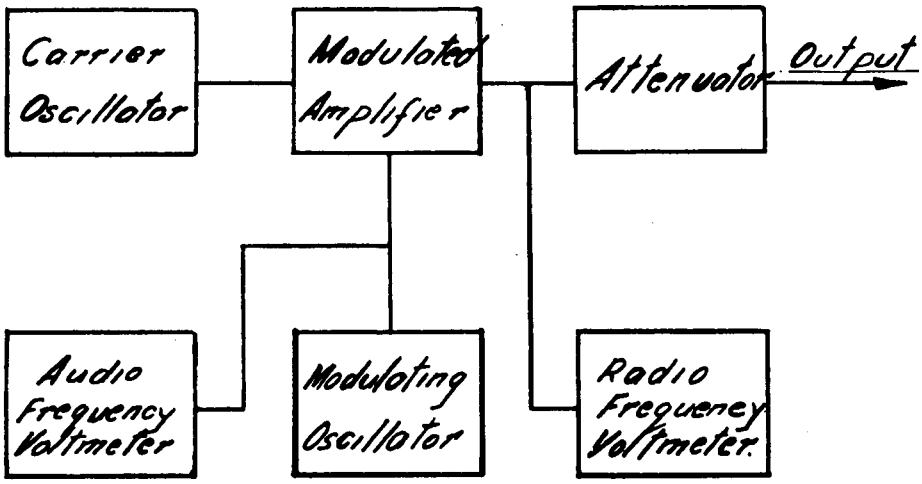

Fig. 1
BLOCK DIAGRAM

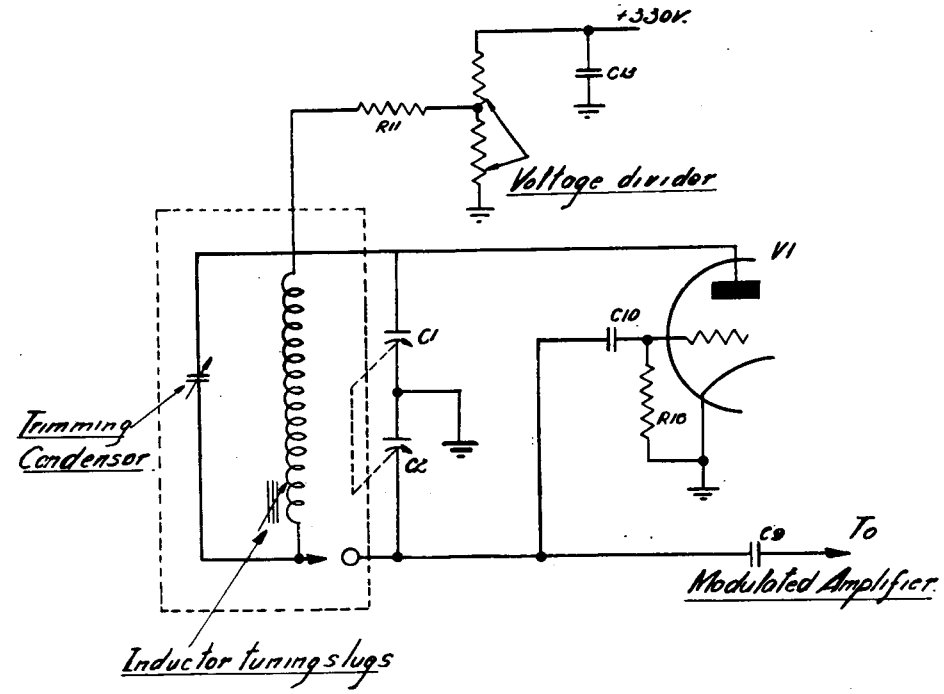

Fig. 3
CARRIER OSCILLATOR CIRCUIT

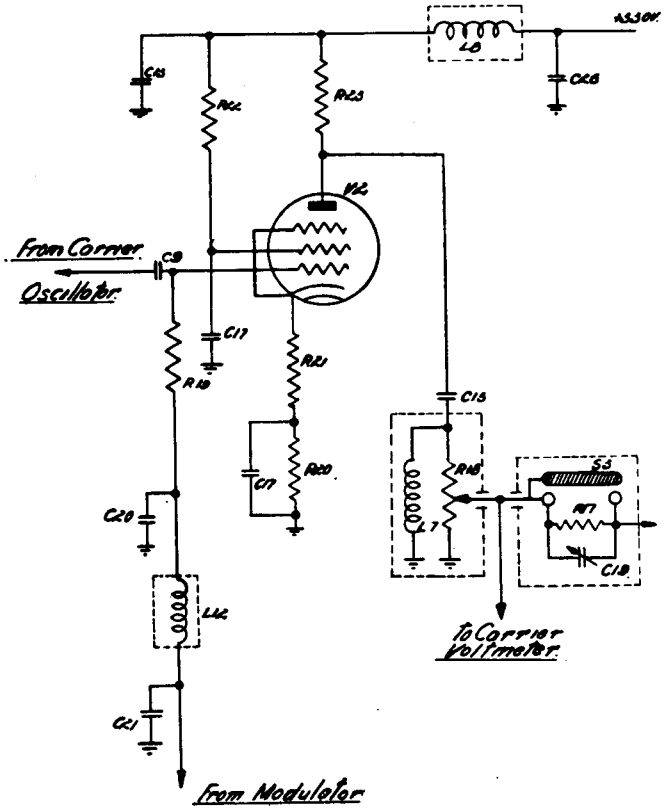

Fig. 4

MODULATED
AMPLIFIER

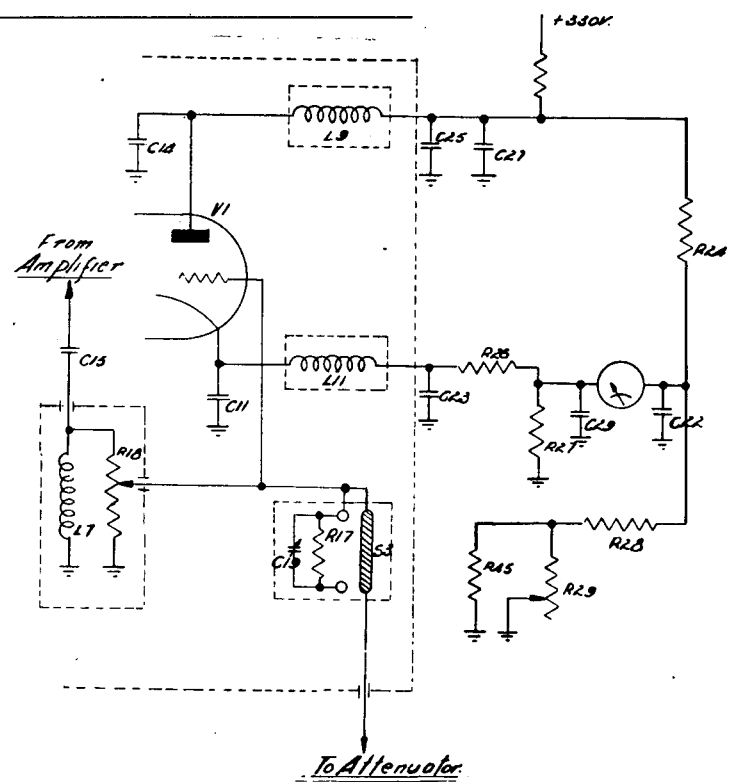

Fig. 5

RADIO FREQUENCY
VACUUM TUBE
VOLTMETER

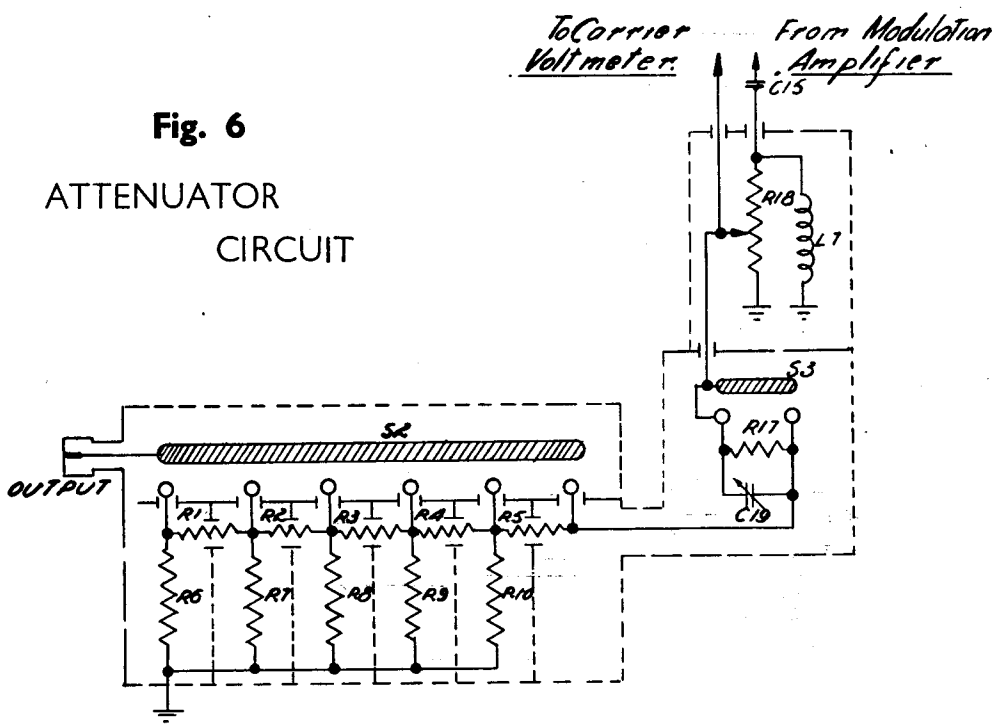

Fig. 6

ATTENUATOR CIRCUIT

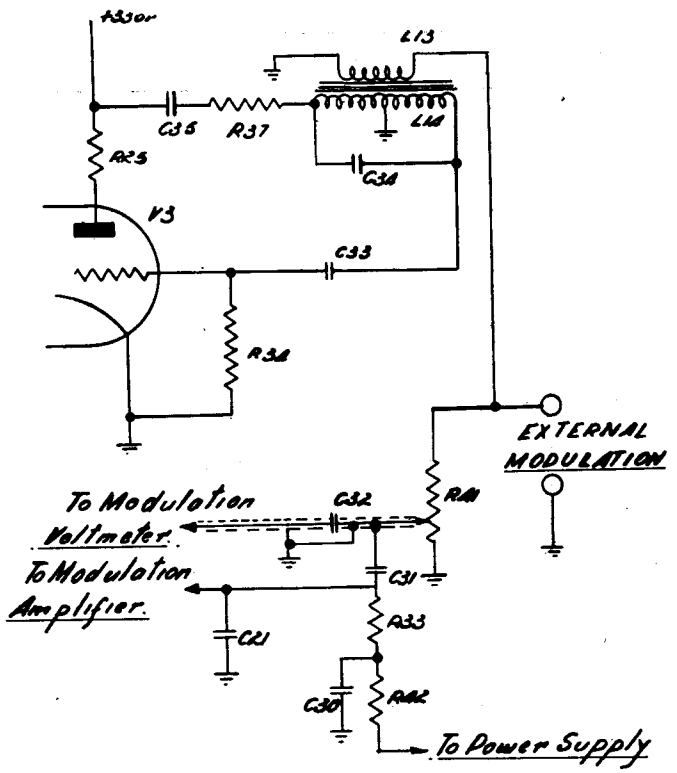

Fig. 7

MODULATING OSCILLATOR CIRCUIT

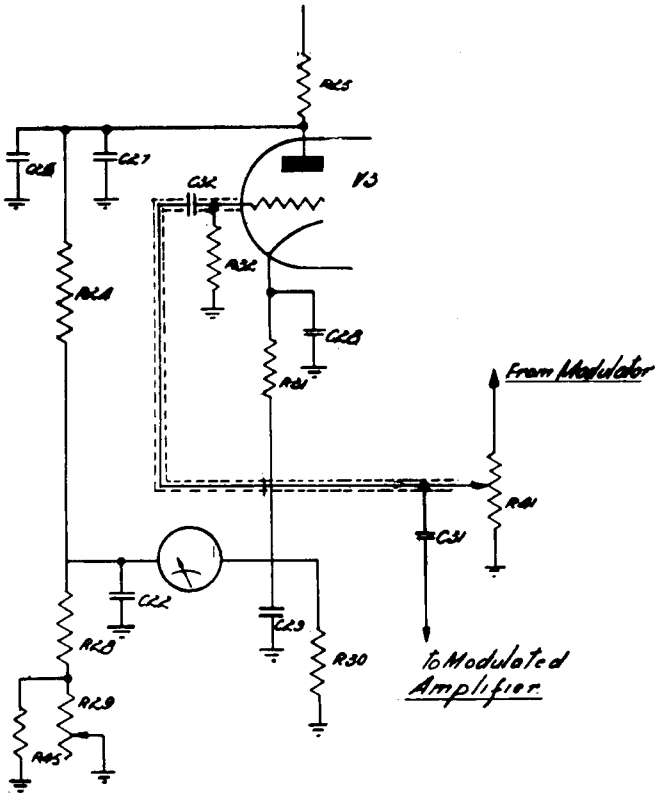

Fig. 8

AUDIO FREQUENCY
VACUUM TUBE
VOLTMETER

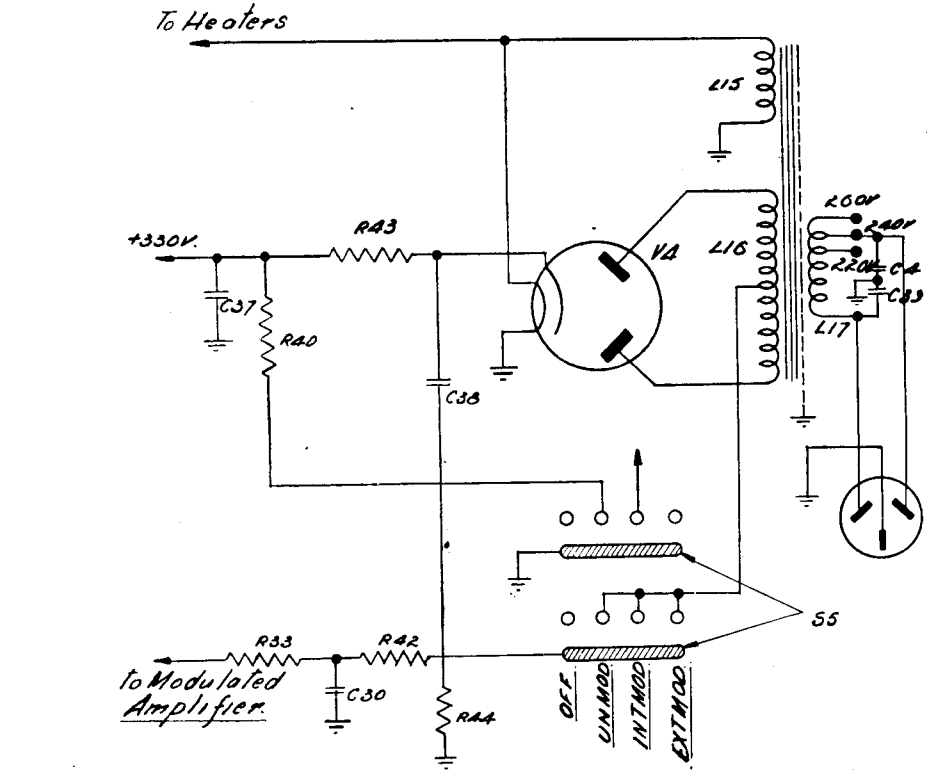

Fig. 9

POWER
SUPPLY CIRCUIT

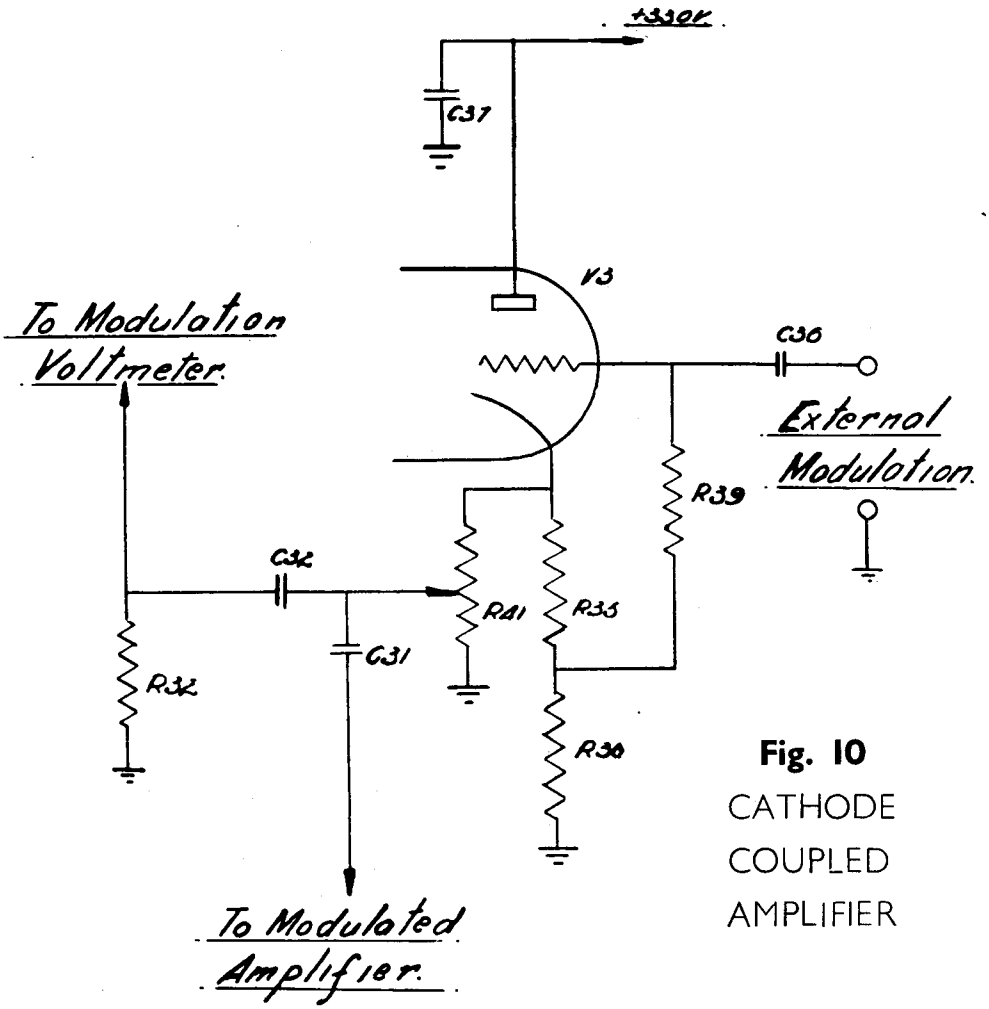

Fig. 10
CATHODE COUPLED AMPLIFIER

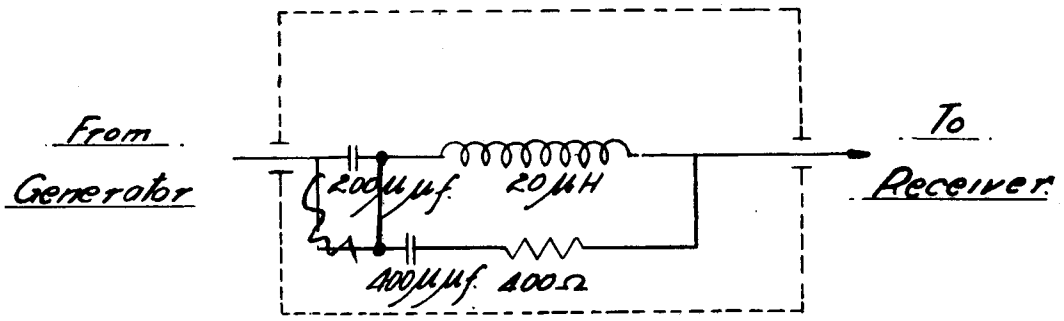

Fig. 11
DUMMY ANTENNA CIRCUIT

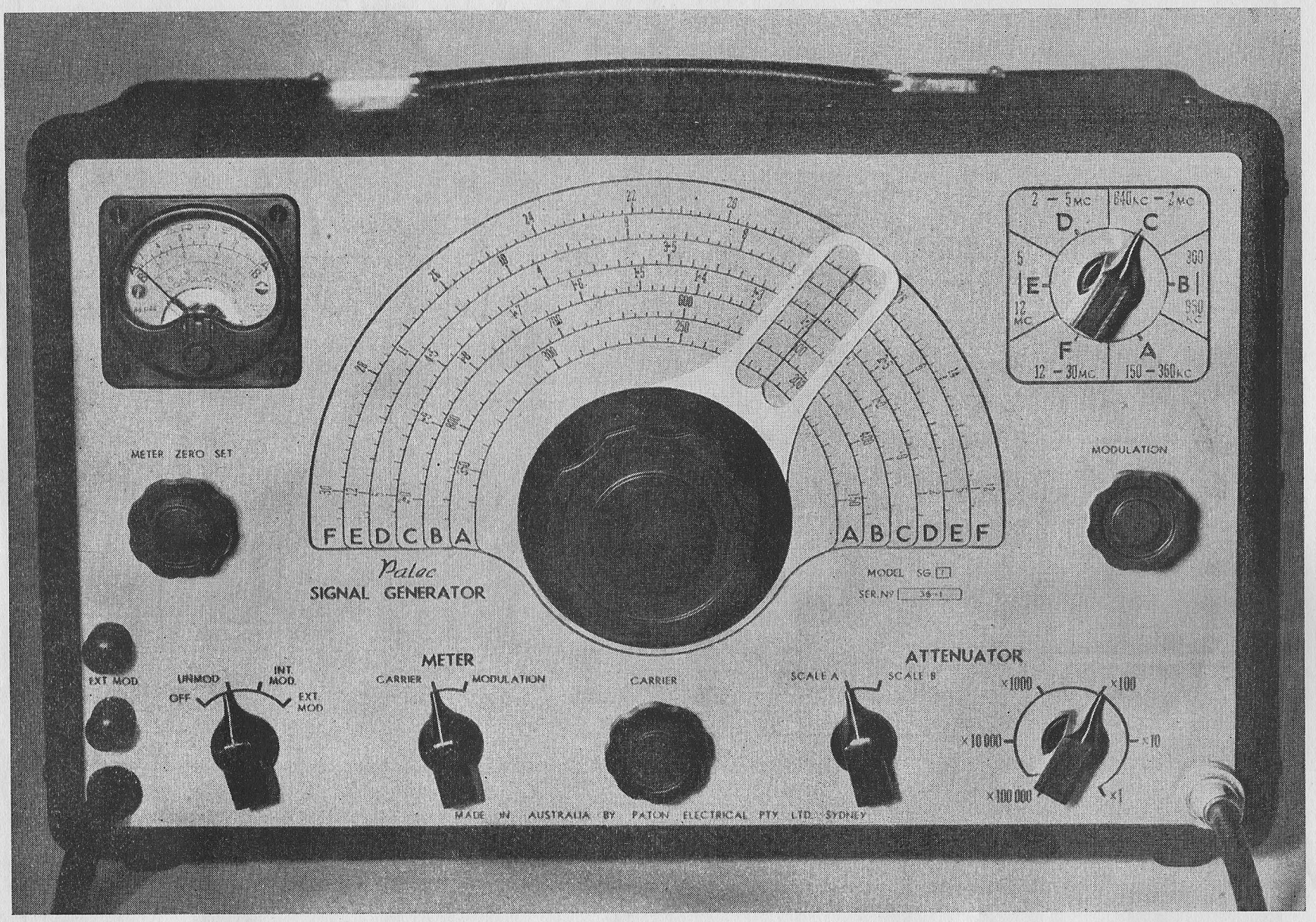
METER ZERO SET
MODULATION
F E D C B A
A B C D E F
Paloc
SIGNAL GENERATOR
MODEL SG
SER. Nº
2 – 5 MC
640 KC – 2 MC
150 – 360 KC
12 – 30 MC
EXT MOD
UNMOD
INT. MOD.
OFF
EXT. MOD.
METER
CARRIER
MODULATION
CARRIER
SCALE A
SCALE B
ATTENUATOR
×1000
×100
×10 000
×10
×100 000
×1
MADE IN AUSTRALIA BY PATON ELECTRICAL PTY. LTD. SYDNEY

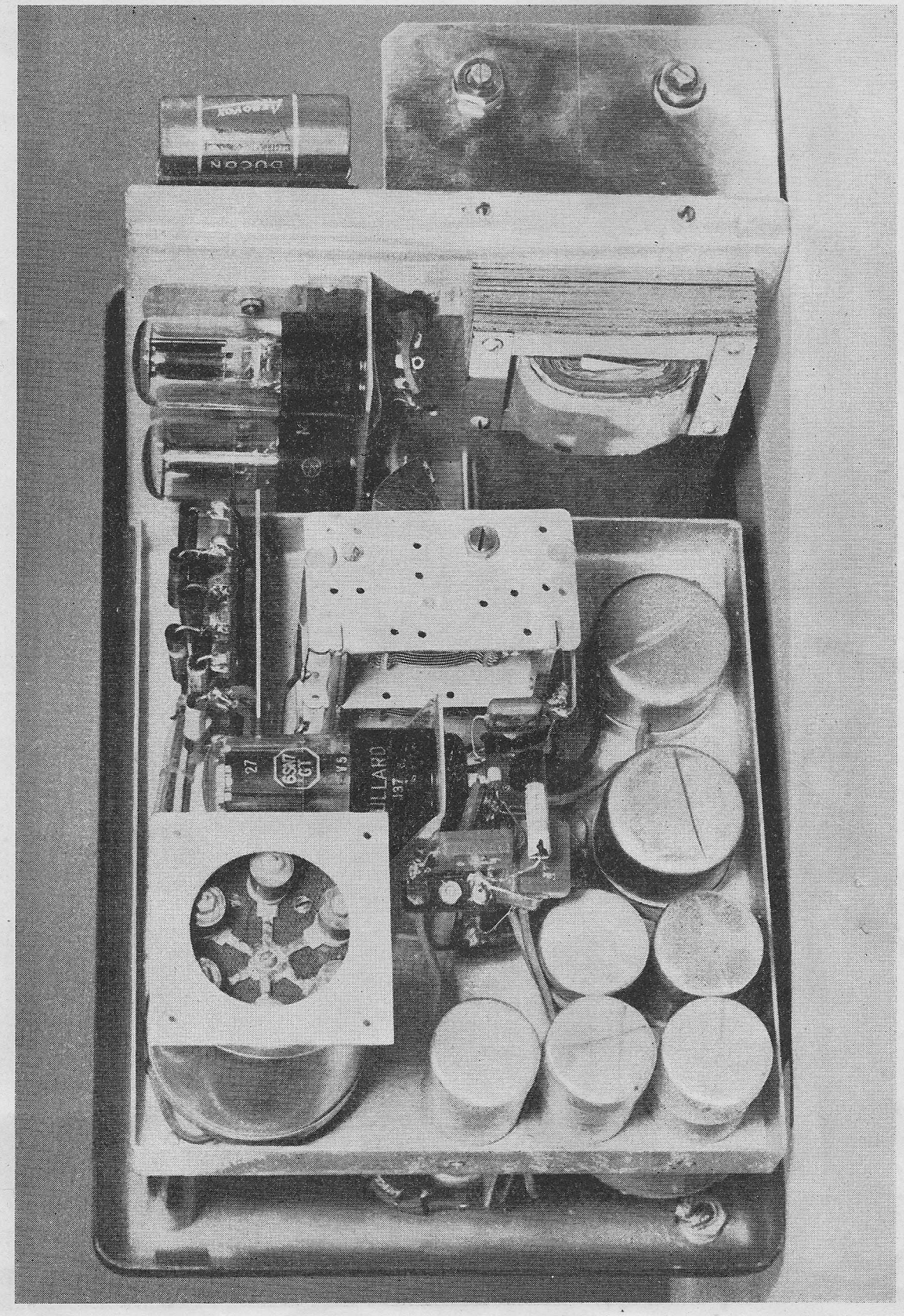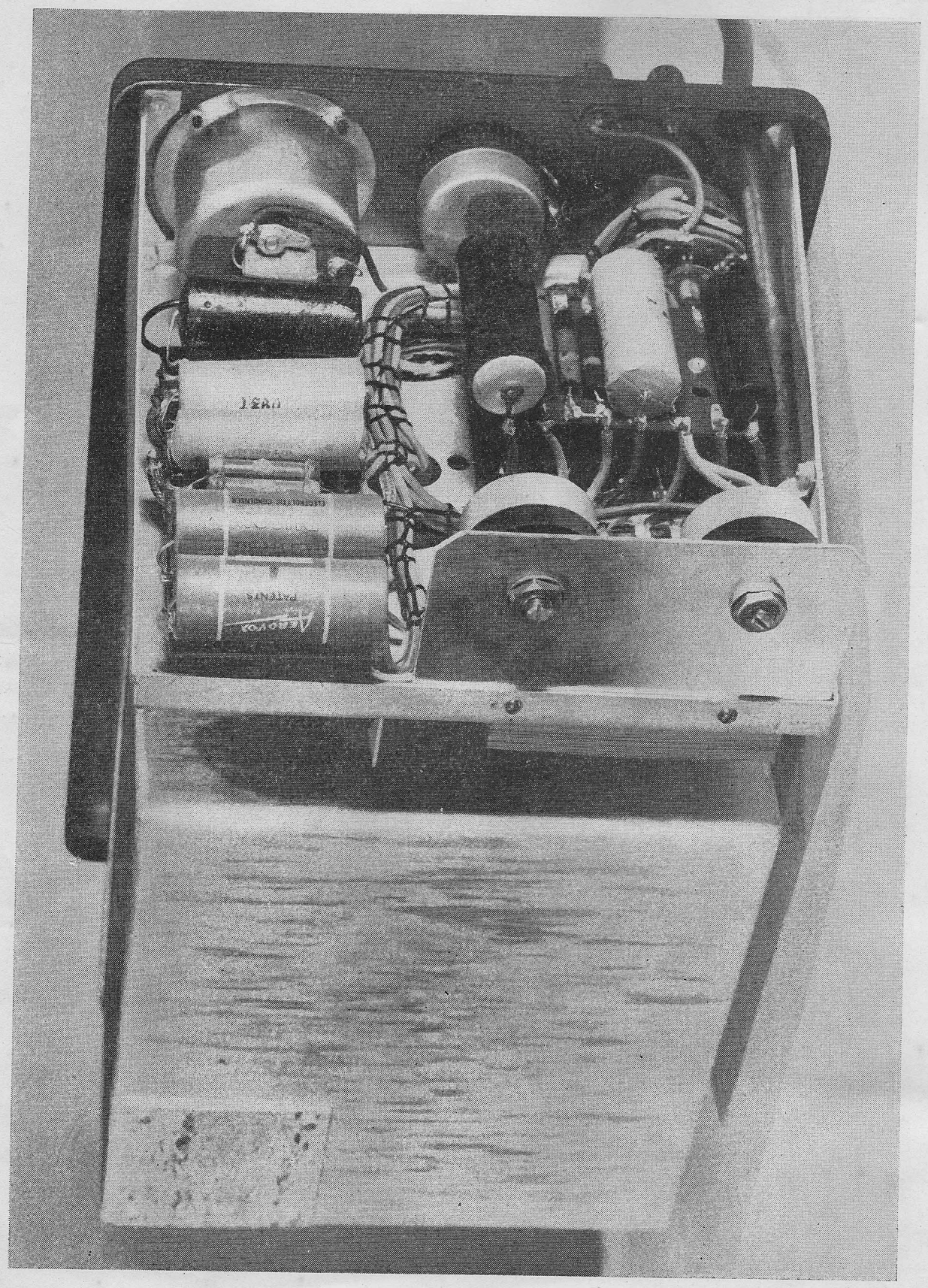
DUCON
6SN7
GT
ILLARD