Technical Manual

TRA 7928

H.F. S.S.B. Transceiver

Printed in Australia

RACAL
The Electronics Group

Racal Electronics Pty. Ltd., 47 Talavera Rd.,
North Ryde, N.S.W. 2113, Australia

Publication No.: 7928-1-1172

WARNING

Exercise great care when making adjustments with power on. Voltages may be LETHAL. If possible ensure that someone capable of rendering aid is also present.

First Aid in Case of Electric Shock

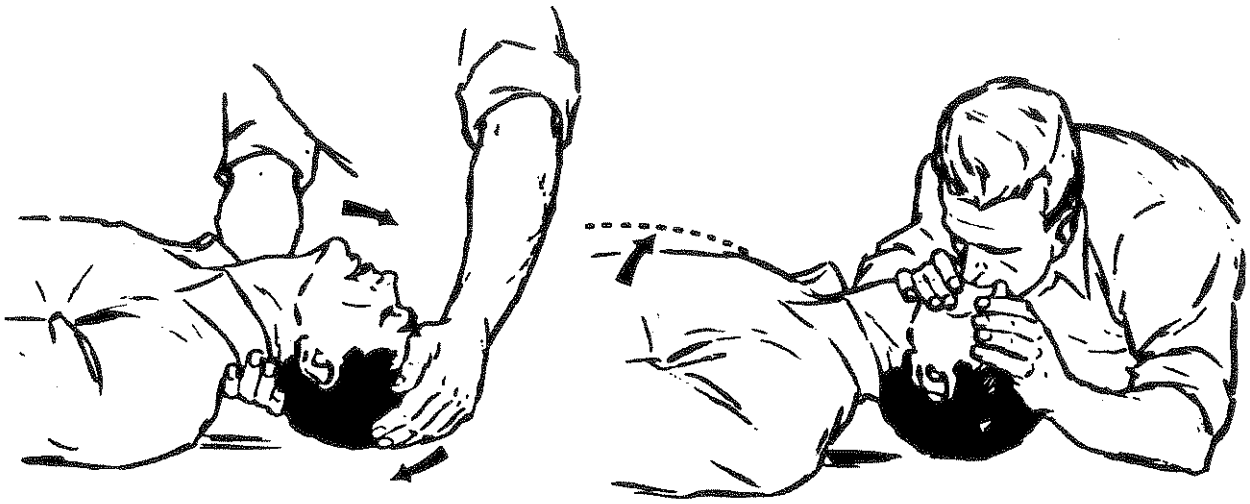

1. Don't touch victim with your bare hands until circuit is broken.
2. Lay victim on his back.
3. Clear his mouth and throat.
4. Raise his head and tilt back as far as possible.
5. Pinch his nostrils.
6. Take a deep breath.
7. Cover his mouth with yours and blow watching his chest rise. Blow forcefully into adults but gently into children.
8. Move face away to allow him to breathe out watching his chest fall.
9. Repeat for five or ten breaths at rapid rate then one breath every 3 to 5 seconds.
10. Keep his head back as far as possible all the time.

If possible send someone else for doctor.
Keep patient warm. Loosen his clothing.
Do NOT give liquids until patient is conscious.

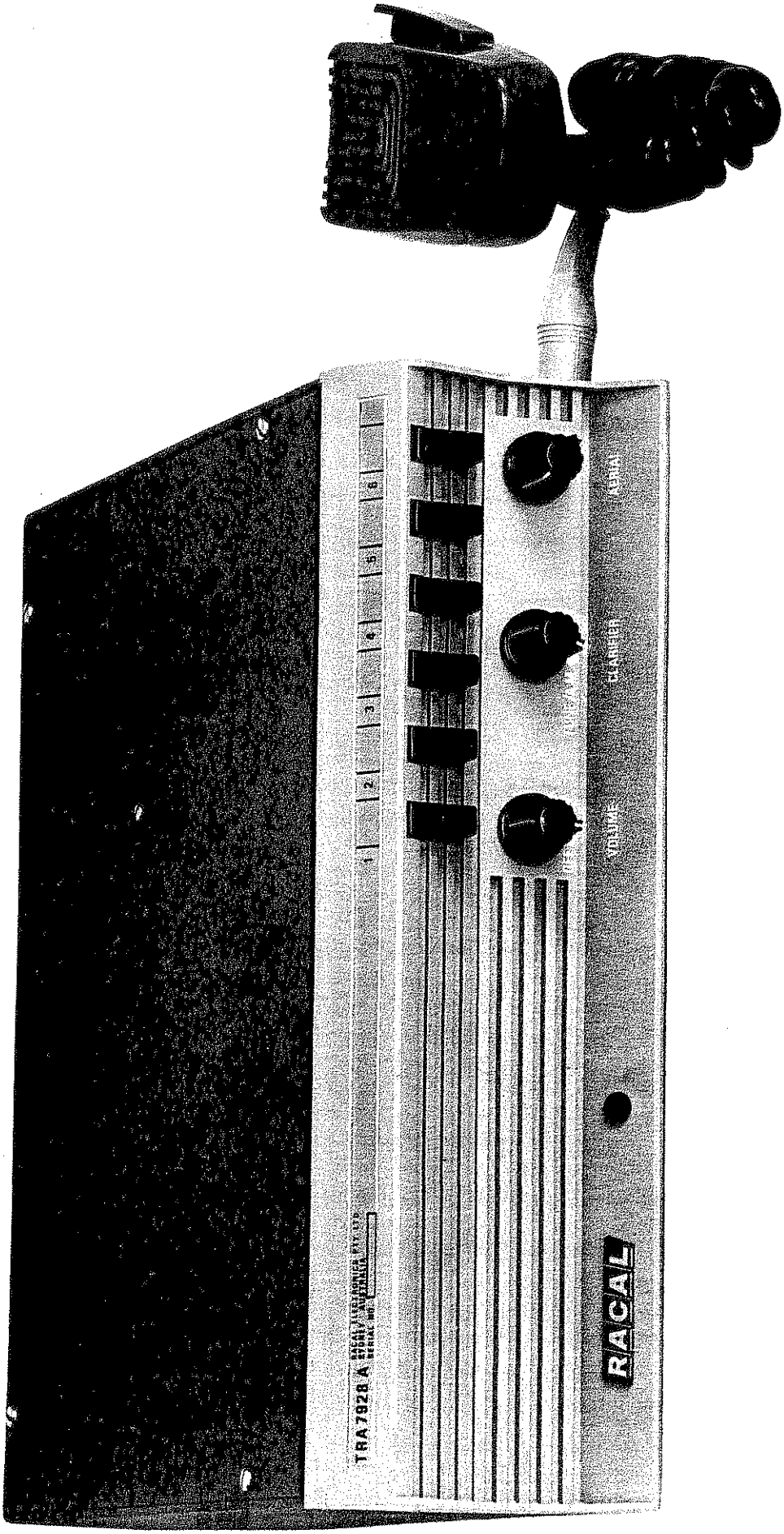

TECHNICAL MANUAL

TRANSCEIVER TRA 7928

C O N T E N T S

PART 1

INSTALLATION & OPERATING INSTRUCTIONS

PART 1

SECTION 1

GENERAL INFORMATION

1. BRIEF DESCRIPTION

2. TECHNICAL SPECIFICATION

HANDSET
TYPE LA7910B

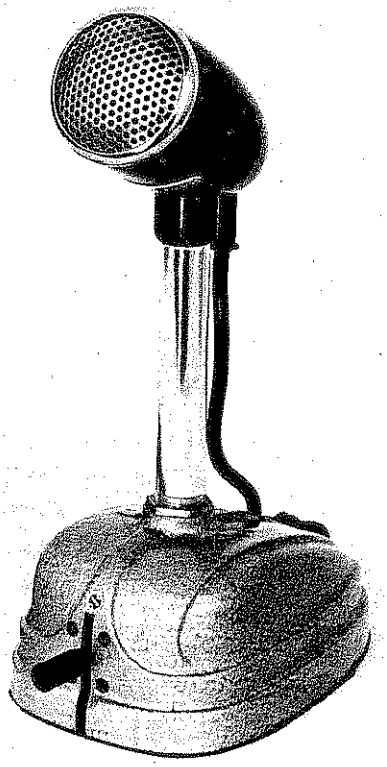

DESK MICROPHONE
TYPE 3034

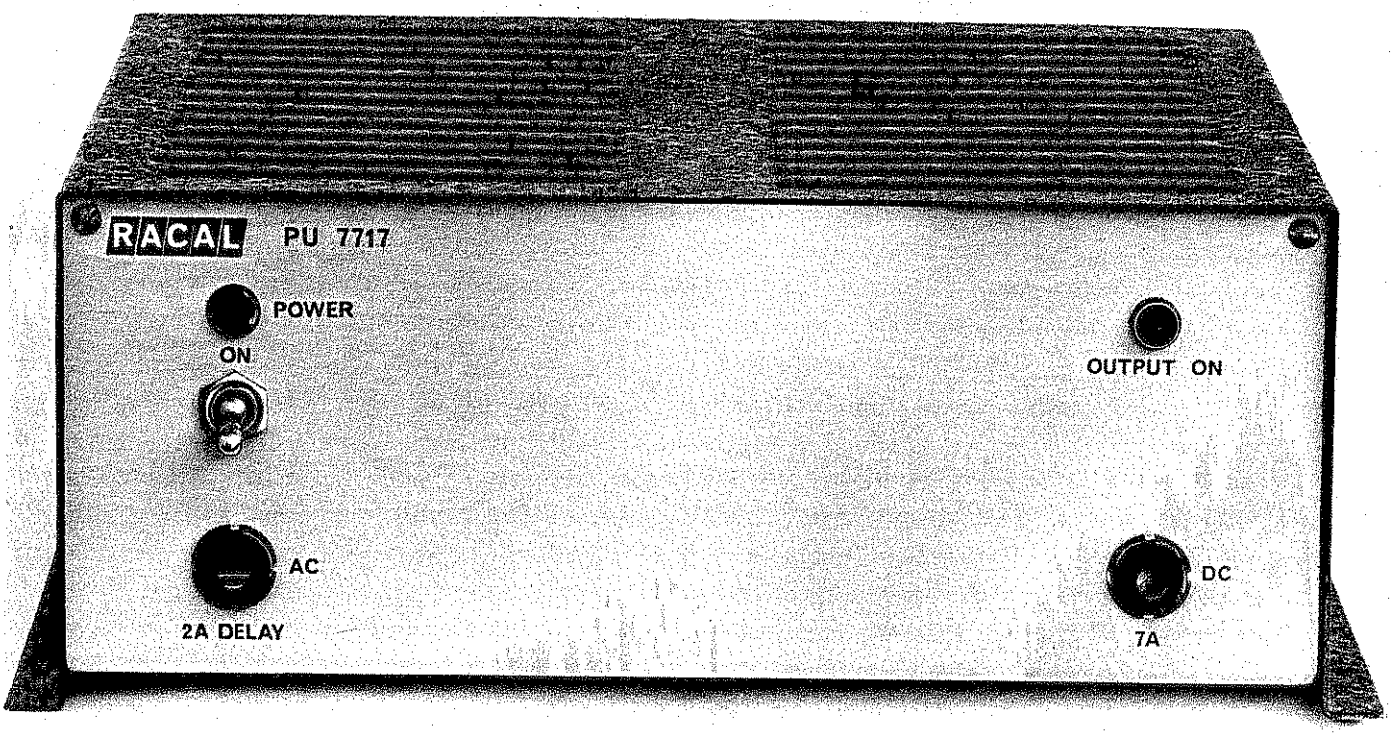

A.C. POWER UNIT PU7717

OPTIONAL ANCILLARY ITEMS

PART 1

SECTION 2

INSTALLATION

1 BRIEF DESCRIPTION

The 25W H.F S.S.B Transceiver TRA 7928, powered from a 12V d.c. source, fully complies with the Australian Post Office Specifications RB209, RB209/0 (Royal Flying Doctor Service requirements) and RB211-C (Marine Use requirements).

In the basic form, u.s.b. single frequency simplex operation on up to six, pushbutton selected, high stability crystal controlled channels is provided, each of which can be of a frequency anywhere in the frequency range of 2 to 10MHz. A single channel version is also available.

Extensions and/or variations to the basic unit provide alternative operating modes and facilities including a.m. capability, selectable sideband, 12 channel operation (or 6 channel two frequency simplex operation) emergency calling and, for marine purposes, automatic selection of a.m. operation on one channel at the distress calling frequency (2182kHz).

Optionally the transceiver can be supplied with an inbuilt aerial tuning unit the single control of which is at the front panel. Alternatively, but essentially for mobile installations, a whip aerial complete with a separate pre-set tuning unit can be provided.

The 'emergency call' facility (a requirement for the Royal Flying Doctor Service) provides automatic transmission of two tones, for a predetermined period, to alert the station fitted with an appropriate detector.

The complete range of variants and available options is tabulated in the following Technical Specification.

Both the transmitter and the receiver are constructed as wideband systems therefore individual channel alignment is unnecessary. Should there be the need to change a channel frequency, substitution of a crystal and accurate setting by the associated trimmer only is required. The temperature controlled oven, enclosing the frequency determining elements, ensures immunity to ambient temperature fluctuations and channel frequencies are accurately maintained.

A feature of the power amplifier is the ability to operate safely into any load hence, even with a severe mismatch, power is delivered from continued communications.

Of rugged construction, but of pleasing and compact proportions, the transceiver is designed to operate under extreme conditions for minimal current drain.

TECHNICAL SPECIFICATION FOR H.F. S.S.B. TRANSCEIVER TRA 7928 (COMPLIES WITH A.P.O. SPECIFICATIONS RB209, RB209-0 and RB211-C)

GENERAL

Frequency Range:	2 to 10MHz
Frequency Stability:	±50Hz for ambient temp. 0 - 60°C and ±10% variation in supply.
Clarifier:	
TRA 7928A:	Operable in receive only.
TRA 7928B:	Operable in both receive & transmit.
Power Supply:	10.5V to 16V d.c. either polarity, normally 12.6V
Power Consumption:	5W approx. in receive 25W approx in transmit (normal speech)
Ambient Temperature Range:	0 - 60°C
Dimensions:	3 11/16 in. (9.4cm) high 11 15/16 in. (30.3cm) wide 11 3/4 in. (29.8cm) deep
Weight:	10lbs (4500g) approx.

Variants:

NO OF CHANNELS		MODES OF OPERATION	ADDITIONAL FACILITY (IF REQUIRED)
6	SFS	USB USB/AM USB/AM (Marine Version) USB/LSB	EMERGENCY CALLING EMERGENCY CALLING
6	2FS	USB USB/AM USB/AM (Marine Version) USB/LSB	EMERGENCY CALLING EMERGENCY CALLING
12	SFS	USB USB/AM USB/AM (Marine Version)	
1	SFS	USB USB/AM	
1	2FS	USB USB/AM	

TRANSMITTER

Power Output:	25W p.e.p into 50 ohm at nominal supply
Aerial V.S.W.R:	Transmitter will operate into any impedance without cutting out or damage occurring.
I.F. Bandwidth:	300 to 2700Hz at -6dB
Carrier Suppression:	40dB below p.e.p at rated output
Intermodulation:	25dB below tone at rated output
A.L.C Control Range:	30dB (a.f) 20dB (r.f)

RECEIVER

Sensitivity:	
s.s.b	1uV at aerial input for 250mV to Loudspeaker.
a.m.	4uV, 30% modulated at aerial input for 250mW to loudspeaker
Signal/Noise:	
s.s.b	10dB S+N/N for 1uV at aerial input
a.m	10dB S+N/N for 4uV, 30% modulated at aerial input
Maximum Input:	10V r.m.s. e.m.f., 50 ohm source
Image Rejection:	40dB
Spurious Signal Rejection:	60dB
I.F. Bandwidth:	
s.s.b	2.4kHz min at -6dB 4.2kHz max at -50dB
a.m	6.0kHz min at -6dB 14.0kHz max at -50dB
Cross Modulation:	For a wanted signal giving 10dB S+N/N (s.s.b) an unwanted signal of 70dB relative level, 30% modulated and separated from the carrier by at least 20kHz, results in <3dB increase in receiver noise output.
Blocking:	For a wanted signal giving 10dB S+N/N (s.s.b) an unwanted signal of 70dB, separated from the wanted signal by at least 20kHz results in <3dB degradation of output level.
Intermodulation:	To produce a third order product = to a wanted signal giving 10dB S+N/N (s.s.b) two unwanted signals, removed from the tuned frequency by at least 20kHz, must be >+70dB relative to the wanted signal.

A.G.C.:	
s.s.b	<6dB variation in output from 1uV to 100mV input signal.
a.m	<6dB variation in output from 4uV to 100mV, 30% modulated input signal
A.F. Output:	1W to loudspeaker
A.F. Distortion:	5% maximum

OPTIONAL ITEMS AND AVAILABLE ANCILLARIES

	TYPE NO.
INBUILT AERIAL TUNING UNIT	3032
MAINS OPERATED POWER SUPPLY UNIT	PU7717
MICROPHONE (HAND HELD)	LA7700
HANDSET (TELEPHONE TYPE)	LA7910B
MICROPHONE (DESK MOUNTED)	3034
VEHICLE MOUNTING KIT	3042A
MOBILE AERIAL KIT (6FT OR 12FT. WHIP AERIAL) (C/W PRE-SET TUNING UNIT)	3349A or B
VARIOUS TYPES OF AERIALS	

ADDITIONAL INCLUSIVE ITEMS

With each transceiver the following items are supplied.

		QTY
Battery Cable (8½ft. long, one end terminated with plug to mate D.C. INPUT socket). (Racal AAA 3046)		1
Connector, Aerial (to mate with AERIAL socket) (Dage 30220-2)		1
Fuse 10A (Australux 3AG)	Spare	2
Fuse 500mA (Australux 3AG)	Spare	1
Operators Handbook		1

1 GENERAL

Prior to despatch, the transceiver is completely aligned and tested to specifications therefore, on receipt, it is ready for immediate installation and operation. When received it should be inspected to determine that no transportation damage has been incurred and that all fuses are intact.

A 10A fuse is fitted in both positive and negative supply lines in the area behind the transceiver D.C. INPUT socket as shown below. Access requires removal of the bottom cover, secured by five 4BA x ¼ and two 6BA x ½ inch pan head screws.

In the same area a 500mA fuse is fitted in the common line of the supply used to control an external aerial tuning unit. Access to this fuse requires removal of the top cover, secured by four 4BA x ¼ and one 6BA x ¼ pan head screws.

10A FUSES
(D.C. Supply lines)

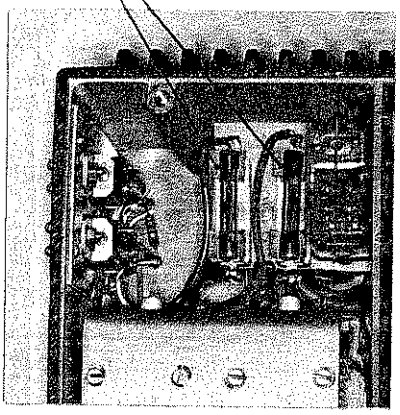

UNDERSIDE VIEW

500mA FUSE
(Common line for external a.t.u. control)

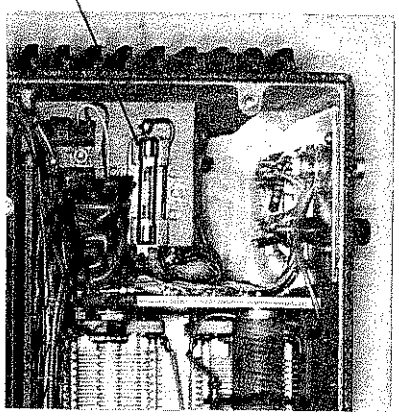

TOP VIEW

LOCATION OF FUSES

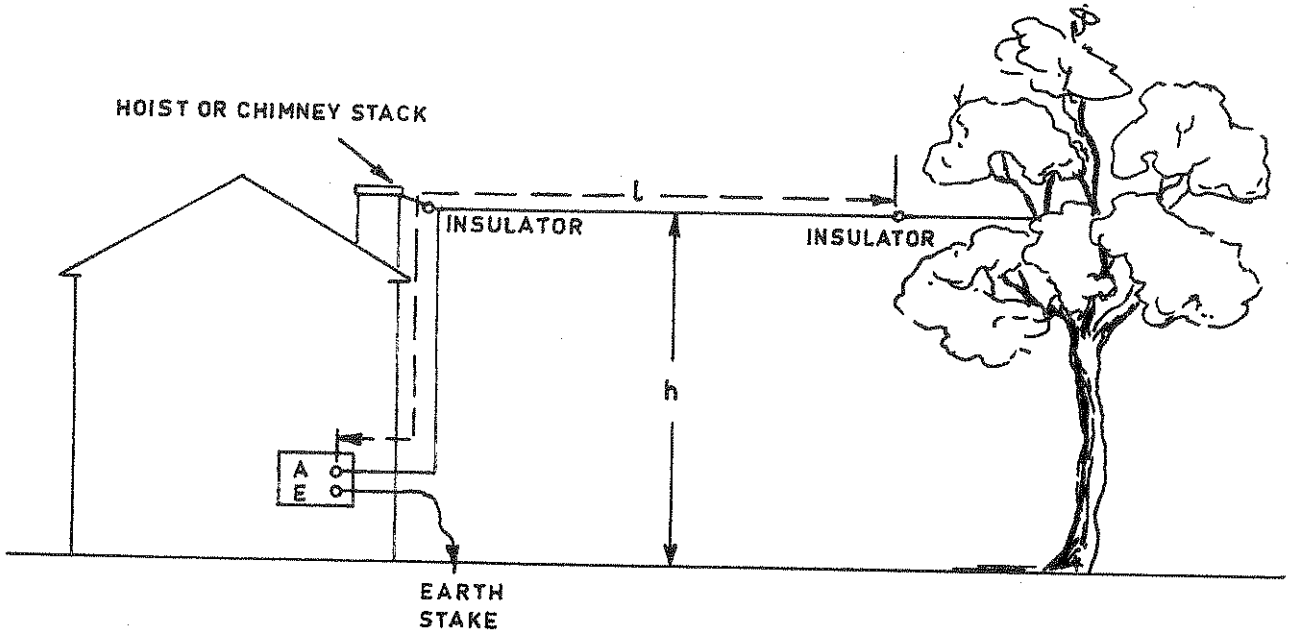

MHz	30	40	50	60	70	80	90	100	110	120
10	✓	✓	✓	✓	✓	✓	✓	✓	✓	✓
9	✓	✓	✓	✓	✓	✓	✓	✓	✓	✓
	✓	✓	✓	✓	✓	✓	✓	✓	✓	✓
8	✓	✓	✓	✓	✓	✓	✓	✓	✓	✓
	✓	✓	✓	✓	✓	✓	✓	✓	✓	✓
7	✓	✓	✓	✓	✓	✓	✓	✓	✓	✓
	✓	✓	✓	✓	✓	✓	✓	✓	✓	✓
6	✓	✓	✓	✓	✓	✓	✓	✓	✓	✓
	✓	✓	✓	✓	✓	✓	✓	✓	✓	✓
5	✓	✓	✓	✓	✓	✓	✓	✓	✓	✓
	✓	✓	✓	✓	✓	✓	✓	✓	✓	✓
4	✓	✓	✓	✓	✓	✓	✓	✓	✓	✓
	✓	✓	✓	✓	✓	✓	✓	✓	✓	✓
3	✓	✓	✓	✓	✓		✓	✓	✓	✓
	✓	✓	✓	✓	✓	✓			✓	✓
2			✓	✓	✓	✓	✓			

AERIAL LENGTHS (l) IN FEET

NOTES:

1) 'l' = total length of aerial i.e. from transceiver AERIAL socket (A) to insulator at suspension point.
2) The height (h) should be at least 20 ft; efficiency of aerial is improved with increased height.
3) The ✓ notation in diagram at left indicates, for operating frequencies, the aerials of 'l' lengths which can be tuned to resonance by the in-built aerial tuner. The longest possible length, suited to frequencies of operation, should be chosen.
4) Where a good earth cannot be formed, due to the soil substance being too dry and loose i.e. sandy or is inpenetrable rock, a counterpoise arrangement (a length of wire run across the ground under the aerial) should be used.

SIMPLE END FED AERIAL ARRANGEMENT

2 FIXED SITE STATION

2.1 Location

In choosing an operating location for the transceiver, the aerial feeder, earthing point and power supply should all be, preferably, in reasonably close proximity.

2.2 Power

A 12 volt d.c. source is required to power the transceiver and for this purpose a 12 volt lead acid heavy duty battery is very satisfactory. Where a battery charging unit is connected, it is most important that the connections are such, should the battery be accidentally disconnected, the charger is not supplying the transceiver, as this could result in damage to the transceiver. Also ensure, when being charged, the battery voltage does not exceed 16 volts.

The cable supplied for the d.c. supply is approximately 8½ feet long which may be cut to a shorter length if required.

Should a longer lead be necessary this will need to be of heavier duty to reduce line voltage losses. Minimum cable sizes for various lengths are:-

70/.0076	up to 20 feet
29/.018	20 to 40 feet

Where an a.c. mains power supply of 115 volts or 250 volts rating is available, this may be utilised to power the transceiver by use of the A.C. Power Unit Type PU 7717 (option).

2.3 Aerial

The choice of a suitable aerial system is important since the performance of the transceiver will depend on the efficiency of this aerial. In most fixed site stations, a single inverted 'L' aerial (see diagram opposite) can be tuned to the operating frequency by the internal A.T.U. When the number of transmitting and receiving channels is limited and the highest efficiency of operation is required, tuned half-wave dipoles may be preferred. Information on suitable dipoles can be obtained from your Racal Distributor.

2.4 Earthing

Efficiency is also dependent upon the provision of a good earth connection to the transceiver. The earthing lead should be kept as short as possible and terminated either by a metal stake (preferably copper) driven into the ground as shown in the diagram, or by a cold water pipe. If this is not practiable, due to siting or soil condition, a counterpoise arrangement should be used - see Note 4 on diagram opposite.

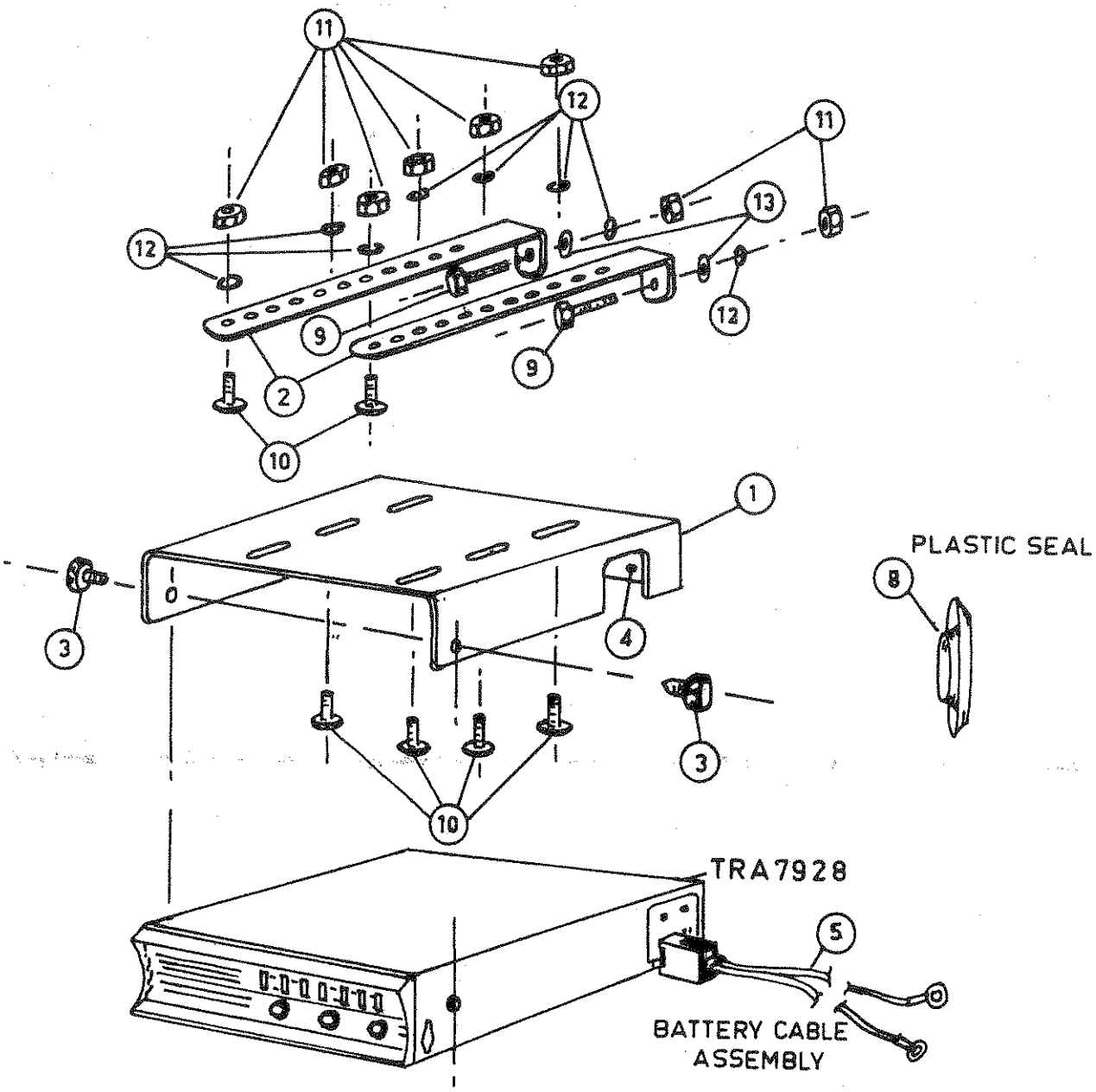

SUPPRESSORS

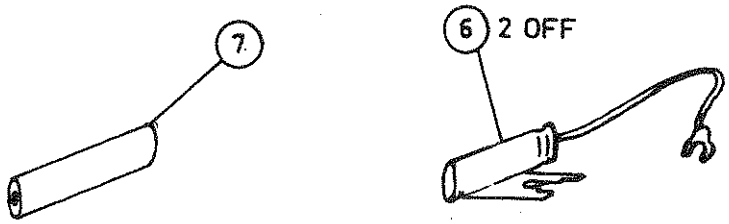

MOBILE MOUNTING ARRANGEMENT

3 MOBILE INSTALLATION

3.1 Vehicle Mounting

The Vehicle Mounting Kit Type 3039 (diagram opposite) is comprised of parts as follows

ITEM	PART	TYPE	QTY
1	Cradle	3055	1
2	Bracket	3103	2
3	Screw	3104	2
4	Pin	3102	2
5	Cable Assy	3046	1
6	Suppressor, Anocap TFME 001		2
7	Suppressor, Erie S5		1
8	Seal, Plastic Simonsons 691/11/16		1
9	Screw ¼ BSW x 1¼ in. HEX HD.M.S.		2
10	Screw ¼ BSW x 3/4 in. PAN HD.M.S.		6
11	Nut, Full, ¼ BSW HEX M.S.		8
12	Washer, spring ¼		8
13	Washer, flat ¼		2

Normally, the transceiver is mounted beneath a vehicle dashboard, in the arrangement shown by the diagram. However, the kit of parts will also serve to mount the transceiver in any other convenient location, with the cradle used to either suspend or support the transceiver.

For an under dashboard location the two brackets type 3103 are fixed, 9 inches apart, by ¼ BSW screws, washers and nuts. The two 1¼ inch long hex. head screws (item 9) are used at the firewall and two of the 3/4 inch long pan head screws (item 10) secure the brackets to the lower edge of the dashboard.

The cradle 3055 is then fitted to the brackets by the remaining four 3/4 inch long pan head screws entered through the cradle slots. These screws, washers and nuts should be made finger tight only at this stage to enable use of the slots for final positioning of the assembly.

In offering the transceiver to the cradle, the two bushes at the rear of the transceiver are located on the cradle pins (item 4) and the transceiver is supported at the front end by the knurled head screws (item 3).

The positioning allowed by the cradle slots is then decided, having regard to ease of fitting the aerial and power plugs, before securely fastening the screws to the brackets.

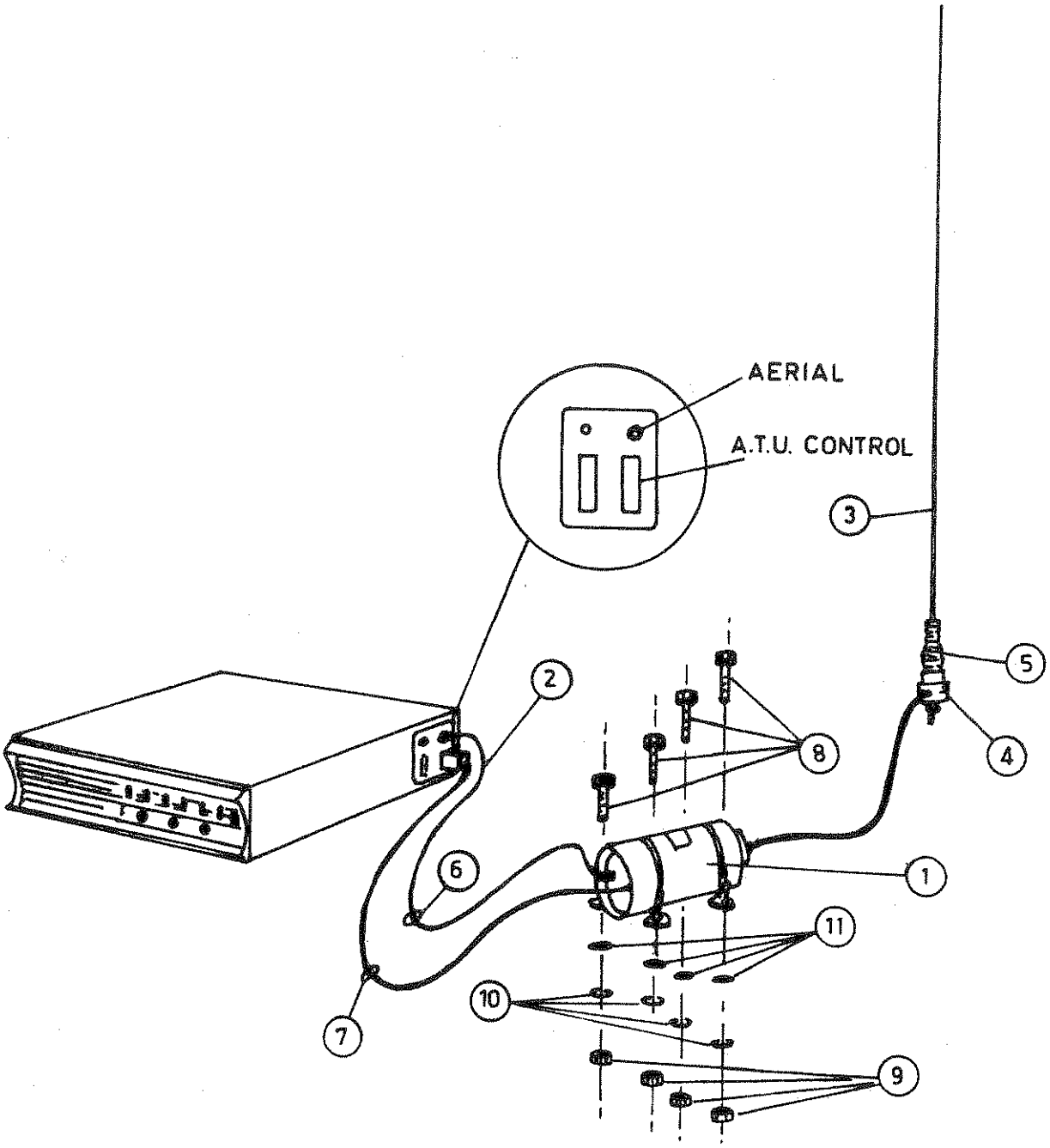

MOBILE AERIAL MOUNTING

Removal of the transceiver is simply a matter of undoing the two knurled head screws, supporting the transceiver with one hand whilst so doing, then withdrawing the set forward.

3.2 Power

When using the vehicle battery for power ensure that the power lead is connected directly to the battery terminals. Generally, it is necessary to provide a hole in the vehicle bulkhead (firewall) through which the power lead can be fed and the plastic seal (item 8) to fit a 1 inch diameter hole, is supplied to prevent chaffing of the lead at this point.

To reduce generator/alternator and ignition noise, three suppressors are supplied as part of the mounting kit, Type 3039 and these should be fitted as follows:-

ITEM NO.	SUPPRESSOR	CONNECTION
Item 7	Resistor	Between distributor and coil.
Item 6	Capacitor	Between coil input (12V) and chassis.
Item 6	Capacitor	Between Generator/Alternator output and chassis.

3.3 Aerial

The mobile aerial kit (diagram opposite) is available with either 6ft. or 12ft Helical Whip aerial the kit types being 3349A and 3349B respectively. The complete set of parts is:-

ITEM	PART	TYPE	QTY
1	Aerial Coupler Assy (ATU)	3015	1
2	Connector Cable	2956	1
3	6 ft Whip Aerial	4370A	1
or	12ft Whip Aerial	4370B	1
4	Aerial Base	A.E.A. H.A.	1
5	Base Spring	A.E.A. S1	1
6	Seal, Plastic 1 in. dia		1
7	Seal, Plastic 1½ in. dia		1
8	Screw, ¼ BSW c 1¼ in HX HD M.S.		4
9	Nut, Full, ¼ BSW HX		4
10	Washer, Spring ¼ in.		4
11	Washer, Flat ¼ in.		4

The mounting arrangement and transceiver connections are shown in the diagram but it is to be noted that 18 inch aerial coupler cable, for connection to the aerial, is of critical length and must not be cut or extended. The proximity of aerial and aerial coupler positions is, therefore, dictated by this cable length.

4 MARINE INSTALLATION

In deciding the best possible location for the transceiver many factors need to be considered, some of which conflict with others.

The main factors, in order of importance, are as follows:-

i) Not to be exposed to a strong sun, to rain or salt water spray.

ii) Transceiver mounting to be close to the aerial feed point.

iii) Transceiver mounting to be close to the battery supply.

In many cases, if points i) and ii) are met, the distance from the transceiver to the battery may exceed the battery cable length of 8½ feet. In this case, refer to paragraph 2.2 for the required cable size.

Apart from giving consideration to the above points, due to many aspects involved in a marine installation, this should only be undertaken by Racal Distributors, or by technicians, having sufficient equipment and knowledge to pre-set the aerial tuning unit accurately, suppress generator, alternator and ignition interference, and install a satisfactory earth and aerial system.

PART 1

SECTION 3

OPERATION

OPERATION

1 CONTROLS

The transceiver controls, including those for alternative operating modes and optional facilities, are as follows:-

VOLUME	The extreme counter clockwise position of this control switches the transceiver OFF. Turning the control clockwise switches the transceiver ON and increases the level of loudspeaker output.
CHANNEL SELECTOR	6 pushbuttons The required channel is selected by depressing the pushbutton immediately below the channel number 1 & 7: 2 & 8: 3 & 9 etc.
CHANNEL BANK (12 Channel versions only)	Pushbutton immediately to the left of the channel selection pushbuttons. In the OUT position channels 1-6 are used: in the IN position channels 7-12 are selected.
EMERGENCY CALL (Optional facility available with 6 channel versions only)	RED pushbutton immediately to the left of the 6 channel selection pushbuttons. When momentarily depressed the emergency call sequence is initiated.
AM OPERATION AT DISTRESS CALLING FREQUENCY - 2182kHz (Marine versions only)	Normally Channel 1 pushbutton which, when depressed, provides automatic transmission in AM mode irrespective of the position of the CLARIFIER/TUNE -AM control.
CLARIFIER/TUNE-AM	The extreme counter clockwise position of this control provides AM operation but if this facility is not included, in this position of the control, an internal tone to permit tuning of the aerial results. With the control turned clockwise out of the TUNE-AM position s.s.b. reception is adjustable for frequency drift.

AERIAL

(When optional in-built A.T.U fitted)

The internal aerial tuning unit is adjusted by this multi-turn control the extreme counter clockwise position, to which the control should be initially set, being the low frequency end.

An 'on tune' setting is reached when the transceiver indicator lamp is at full brilliance which is precisely obtained by use of the combined coarse and fine adjustments of the control. The fine control operates on 'back-off' from a coarse setting for one full turn, before the coarse control re-engages.

In manipulating the control for coarse and fine adjustment several settings for peak brilliance of the indicator lamp may be found. Provided the peaks of brilliance are seen to be equal it is immaterial which 'on tune' setting of the control is used.

INDICATOR LAMP

For the transceiver condition the indicator lamp response is as follows:-

Transceiver OFF	OFF
Receive State	Steady light.
On Tune	Brightness varies with position of AERIAL control. Max. brightness occurs when aerial is tuned.
Transmit-SSB	Light varies from zero to max. depending upon level of speech.
Transmit-Compatible AM	Steady light, increasing with max. speech level.

PRESS-TO-TALK (P.T.T.)
Extended to microphone.

Depressing the microphone P.T.T switch places transceiver in the transmit state.

2 OPERATION

(a) Transceiver Not Fitted With Internal Aerial Tuning Unit.

i Select the required operating channel.

ii Set CLARIFIER control mid. position of travel.

iii Switch POWER on and adjust VOLUME control for required loud speaker output level.

iv Check that the microphone P.T.T. switch is in the normal position, resulting in the transceiver being on receive.

v To transmit, press P.T.T. switch on the microphone and talk in a clear normal voice at a distance 6 to 8 inches from microphone.

vi When a signal is received, adjust the CLARIFIER control to give clear intelligible speech.

vii If required to operate on A.M. (where the A.M. compatible option is fitted) switch the CLARIFIER to the extreme anti-clockwise TUNE/AM position.

(b) Transceiver Fitted With Internal Aerial Tuning Unit.

i Select the required operating channel.

ii Set CLARIFIER control mid position of travel.

iii Switch POWER on and adjust VOLUME control for required loudspeaker output level.

iv Check that the microphone P.T.T. switch is in the normal position, resulting in the transceiver being on receive.

v Set the CLARIFIER control to the extreme anti-clockwise position (TUNE/AM).

vi Depress the microphone P.T.T. switch and adjust the AERIAL control to obtain maximum illumination of the indicator light as described above.

vii Reset the CLARIFIER control to the mid. point.

viii When a signal is received, adjust the CLARIFIER control to give clear intelligible speech.

ix If required to operate on A.M. (where A.M. Compatible option is fitted) switch the CLARIFIER control to the extreme anti-clockwise TUNE/AM position.

PART 2

TECHNICAL DESCRIPTION

PART 2

SECTION 1

PRINCIPLES OF OPERATION

PRINCIPLES OF OPERATION

1 INTRODUCTION

The S.S.B. Transceiver TRA 7928 essentially comprises three modules which are:-

Oven Oscillator Unit
Exciter/Receiver Board
Power Amplifier Board

The Oven Oscillator Unit is an electrically heated, temperature controlled assembly containing the channel oscillator and carrier insertion oscillator (c.i.o) both of which are crystal controlled. The channel crystals are selected for the appropriate channel oscillator frequency, by d.c. controlled diode switches. The c.i.o. has a clarifier circuit for external line adjustment of this frequency.

At the Exciter/Receiver Board the transmit and receive circuits are built around a common mixing and i.f. stage. Input to the mixers, for transmission or reception, is a function of electronic switching. For the transceiver variants providing a.m or switchable sideband operation the board contains additional filters and switching circuits.

The 100mW r.f. output from the Exciter/Receiver Board is fed to the Power Amplifier which is capable of delivering 25W p.e.p into a 50 ohm load.

An additional module, Two Tone Generator Board, is required for provision of the Emergency Call facility.

The transceiver requires a 12V d.c. input which in the transceiver transmit state, is directly switched to the power amplifier. Most of the other circuits require a regulated 9V supply which is taken from a regulator built on the Exciter/Receiver Board.

2 RECEPTION (U.S.B. Operation)

Input signals in the 2 to 10MHz range are fed to a four pole, two zero bandpass filter to attenuate signals which are in the broadcast band and the image frequency of the required signal.

Channel oscillator output ($f_{ch.o}$) a.g.c. controlled and 10.7MHz higher than the operating channel frequency (f_s) is fed into double balanced mixer the tuned circuit of which selects the difference frequency ($f_{ch.0}-f_s$).

A highly selective sideband filter precedes the i.f. amplifiers the tuned circuits of which provide additional selectivity. The gain of one amplifier is automatically controlled.

At the second double balance action mixer, the $f_{ch.o}-f_s$ signal and input from the carrier insertion oscillator (c.i.o) gives an audio output which is fed to an a.f. pre-amplifier. This amplifier also acts as a low pass filter with sharp roll off above 3kHz providing further receiver selectivity. Output from the amplifier, is also used to drive the a.g.c. detector.

3 TRANSMISSIONS (U.S.B. Operation)

Audio input from the microphone is fed to the mixer via an amplifier which incorporates a.g.c. to limit the audio drive to the rest of the transmitter. The 10.7MHz c.i.o. is also fed to the mixer and output consists of sidebands centred on 10.7MHz ,the carrier being balanced out.

In the common i.f. amplification stage, for transmission, a.g.c. is switched out and pre-set gain components used.

The amplified i.f. is heterodyned with the channel oscillator output at the second mixer to product the required $f_{ch.o}$-i.f signal plus the image $f_{ch.o}$+i.f. Leakage of the product components is minimised by the mixer double balance action and further rejection occurs at the following five pole filter.

The five pole filter passes the required $f_{ch.o}$-i.f signal only which is raised to a level of approximately 100mW by an r.f. amplifier operating in class B mode.

For aerial tuning purposes an audio oscillator is included the signal from which is not only switched into the exciter but also into the receiver speaker amplifier to give the operator an audible indication of the oscillator active state.

The power amplifier input from the exciter is fed, via an emitter coupled a.l.c stage, to drive a series of linear wideband stages.

There are two class A amplifiers followed by two class B push pull stages which are individually biased by temperature compensated circuits. A wideband transformer serves to couple the output of the second class B push pull stage to the aerial changeover relay and to isolate the power amplifier from the transceiver chassis.

The a.l.c circuitry sensing both the transmitter output and the operating conditions of the final amplification stage, ensures that maximum output, as allowed by the aerial impedance and power supply voltage, is maintained, also safe continued operation into any aerial impedance.

Both the magnitude and phase of output voltage and current is sensed by circuitry which is designed such that, for a matched aerial condition, there is maximum detector output and, therefore, maximum brilliance of the TUNE lamp.

4 OTHER OPERATING MODES AND FACILITIES (If specified)

4.1 A.M. Operation

The i.f output of the 1st mixer is directed to the a.m. filter, to by-pass the sideband filter, and thence, via the amplifiers, to the 2nd mixer.

An audio output is obtained by feeding the 2nd mixer with a.m carrier instead of the local carrier (c.i.o) the a.m carrier being recovered by a high gain limiting amplifier sampling the i.f.

During periods of no modulation and hence no audio output in the receive state, a secondary a.g.c. detector, sensing the i.f. level, clamps the a.g.c. to prevent i.f. overload.

An r.f. output is produced by re-inserting the c.i.o signal, at pre-set level, into the i.f. stage. This c.i.o signal replaces the a.f. oscillator for aerial tuning purposes.

4.2 Switchable Sideband

With the two sideband filters fitted for this requirement, the i.f. signal is simply switched through one or the other for u.s.b. or l.s.b. operation.

4.3 Emergency Calling

The additional module required for this facility has two tone oscillators, differing in frequency by 440Hz, and a timer circuit. When triggered the timer circuit not only turns the oscillators on but also grounds the p.t.t line so that transmission of the signal is automatic and for a duration of approximately 20 seconds.

PART 2

SECTION 2

SUPPLY LINES AND SWITCHING CIRCUITS

1. INTRODUCTION

The transceiver front panel controls and the p.t.t. control of the microphone set up 'logic levels' for the operation of electronic switching within the modules. Before entering into detailed description of the module circuits therefore the logic levels of these controls will be discussed.

Refer to Transceiver Chassis Wiring Diagram ACC 3000.

2. Receive and Transmit 9V Lines

The relay (RL/4), operated by the p.t.t control, switches the regulator 9V output, via contacts RL2, to one of two lines i.e. the RX 9V line and the TX 9V line. By the voltage on these lines the channel oscillator or carrier insertion oscillator is switched for input to the mixers as required; a.g.c. action is also disabled in the transmit condition.

3. 12V Line

Through contacts RL3, a 12V line is established in the transmit state which voltage is applied to the power amplifier.

4. Receive A.M. Line (If A.M. mode specified)

Where a.m. operation provided, due to the wiring of RL1 and the clarifier/AM switch contacts SB-B1, 9V on the a.m. line is not held in receive a.m. mode. The carrier insertion oscillator and the sideband filter electronic switch are powered by this line and are, therefore, switched off for a.m. mode reception.

5. U.S.B/L.S.B Operation (If specified)

The USB/LSB pushbutton switch SD1 provides 9V and OV at pin L of the Exciter/Receiver Board to select, by electronic switching, u.s.b and l.s.b filters respectively.

PART 2

SECTION 3

OVEN OSCILLATOR UNIT TYPE 3044

1. CHANNEL OSCILLATOR
2. CARRIER INSERTION OSCILLATOR
3. OVEN CONTROL CIRCUIT

OVEN OSCILLATOR UNIT TYPE 3044

The Oven Oscillator Unit Type 3044 for 6 or 12 channel use comprises a p.c. board fitted with an aluminum casting which forms an oven. Within this enclosure, which is electrically heated and maintained at a temperature of 70^{0}C, the board accommodates the crystals and frequency determining elements of the oscillators.

1 Channel Oscillator

Q1 and Q2 form an amplifier circuit with positive feedback via C1. The feedback is such that, without a crystal in circuit, the amplifier is stable, i.e. it will not oscillate. With a crystal across Q1 emitter to ground plane the amplifier gain is increased at a frequency associated with the series resonance of the crystal and the circuit oscillates. Clamping diodes D2 and D3 limit the output and the feedback so that Q1 and Q2 operate within their linear regions. Hence, the stability of the oscillator is, mainly, a function of the crystal and associated tuning components.

Where 12 channels are available (type 3044A) the crystals are arranged in two banks of six (1 to 6 and 7 to 12). The channel switching lines, via the board pins K, L, M, N, P and Q, diode select two crystals, one from each bank. The channel bank selection circuit comprises Q3 and Q4 the on/off state of which is dependent upon the voltage at board pin J. Where this voltage is 9V, Q3 is on and crystals 1 to 6 are enabled whereas with OV at this pin the states of Q3 and Q4 are reversed and crystals 7 to 12 are enabled.

Where 6 channels only are available (type 3044B), the bank select circuitry and the components for channels 7 - 12 are omitted. R11 is linked to the ground plane to complete the oscillator circuit.

2 Carrier Insertion Oscillator

The operating principles of this oscillator are identical to those of the channel oscillator described above.

Normally, the clarifier facility is not required when transmitting. To disable the clarifier in the transceiver transmit state, 9V is switched to board pin E and Q11 is turned on. In this condition the frequency of the oscillator is determined by the setting of C58 only.

In the receive state Q11 is off and the additional frequency determining circuitry L2, C59 and D16 is enabled, The capacitance of D16 is a function of the d.c. voltage supplied to pin H; adjustable inductor L4 compensates for the mean capacitance of C59 and D16 allowing centrallisation of the clarifier range about the nominal C.I.O. frequency.

3 Oven Control Circuit

ML1 is an amplifier with differential inputs (pins 2 and 3) comparing the voltage at R30, RB1 junction against a reference set by R29. RB1 is a thermistor located in the oven and adjacent to one of the heating transistors, Q6 and Q8.

The amplifier input differential at 'switch on' is such that the output of ML1, fed via Q5 and D12 tends to turn Q6 and Q8 hard on. Q7 limits the drive to deliver approx. 0.7V across R35 and R37 which resistors determine the heating current through Q6 and Q8.

When the oven temperature reaches 70°C, the increased resistance of RB1 reduces the output voltage of ML1, and therefore the heating current, to a level whereby the temperature of 70°C is maintained.

PART 2

SECTION 3

OVEN OSCILLATOR UNIT TYPE 3047

1. CHANNEL OSCILLATOR
2. CARRIER INSERTION OSCILLATOR
3. OVEN CONTROL CIRCUIT

OVEN OSCILLATOR UNIT TYPE 3047

The six channel Oven Oscillator Unit Type 3047 comprises a p.c. board fitted with an aluminum casting which forms an oven. Within this enclosure, which is electrically heated and maintained at a temperature of 70°C, the board accommodates the crystals and frequency determining elements of the oscillators.

1 Channel Oscillator

The oscillator Q2 is basically a feedback amplifier with the output fed back in phase with the input via C5 and C6. Under normal operation conditions the gain of Q2, from collector to emitter, is less than unity and hence the amplifier is stable. However, when a crystal is in circuit it forms a parallel resonant circuit with C5 and C6 and oscillation will occur. R.F. output, at the crystal frequency, is a available at pin N, via buffer Q3.

The output of Q3, detected by diodes D1 and Q1 base-emitter, results in a collector swing at Q1 which, controlling the bias conditions of Q2, provides an r.f. swing of approximately 1.4V p-p (voltage drop of D1 and V_{BE} of Q1) at the collector of Q3. The output is attenuated to the required level by R13 and the load presented by the Receiver/Exciter at pin N.

Crystal selection is made by grounding the appropriate pin K, L, P, R, S or T thus forward biasing the diode in series with the crystal.

2 Carrier Insertion Oscillator

This oscillator operates in a similar manner to the channel oscillator described above.

Normally, the clarifier facility is not required when transmitting. To disable the clarifier in the transceiver transmit state, 9V is switched to board pin F and Q7 is turned on. In this condition the frequency of the oscillator is determined by the setting of C36 only.

In the receive state Q7 is off and the additional frequency determining circuit L4, C37 and D9 is enabled. The capacitance of D9 is a function of the d.c. voltage applied at pin H; adjustable inductor L4 compensates for the mean capacitance of C37 and D9 allowing centrallisation of the clarifier range about the nominal c.i.o. frequency.

3 Oven Control Circuit

The oven is heated by Q4, which is bolted directly to the casting, and temperature sensing is a function of p.t.c. thermistor RB1, set into the casting by an epoxy resin, adjacent to Q4.

ML1 operates as a differential amplifier which, supplied with the voltage at RB1 R28 junction (pin 3) and that set by R27 (pin 4), provides an amplified difference voltage to drive the base of Q4 via the d.c. level shifting Zener diode D8.

The current drawn by Q4 on 'warm up' is determined by resistor R33 and the voltage developed is applied to the base of Q5. When the oscillator current of Q4 exceeds 1A approx. Q5 turns on and the voltage at pin 2, otherwise set by R34 and R35 to 4.5V is lowered. As the voltage at pin 2 is decreased so the gain of ML1 decreases with the result that the maximum current drawn by Q4 is limited to 1.4A approximately.

When the temperature of the oven reaches 70°C the increased resistance of RB1 reduces the output voltage from ML1, and hence the heating current, to a point whereby this temperature is maintained.

PART 2

SECTION 4

EXCITER RECEIVER BOARD TYPE 3028

The basic board, to provide transmission and reception in u.s.b only, will firstly be described.

1. RECEIVER CIRCUIT

1.1 Input Filter

This is a 2 to 10MHz bandpass filter in a four pole two zero configuration comprising C13 to C19 and L1 to L4.

1.2 Diode Protection

The clamping diodes D1 and D2, protect the receiver input circuit against excessive (greater than 2V), input voltage.

1.3 Filter Switch

Q4 and Q5, with associated components, form a series shunt switch under the control of the RX 9V line. In the receive condition Q5 is on, hence Q4 is off, allowing receiver input signals to pass the first mixer.

1.4 I.F. Trap

C22 and L6 are in series resonance at the intermediate frequency (10.7MHz) thereby attenuating signals of this frequency .

1.5 First Mixer

Since the first mixer has a constant current source, ML2-A, the input signal is equally amplified by the low noise amplifiers, Q6 and Q7, but phase opposed. R32 and R34, a.c. connected by C28 and C29, provide emitter degeneration thereby improving linearity and the dynamic range.

The channel oscillator output is applied to the switching transistors of ML2 which are connected for double balanced mixing action. Thus, any i.f. breakthrough may be balanced out by adjustment of R39 which is factory pre-set.

The mixer product $f_{ch.o}-f_s$ is selected by the parallel tuned circuit of T1 secondary and C33.

Gain control is effected by varying the channel oscillator level to the first mixer, the drive circuit of which has a.g.c. This circuit is discussed in more detail under the heading of Receive and Transmit Supporting Circuitry.

1.6 Sideband Filter

U.S.B operation is provided by the crystal filter FL2 which is resistively terminated by R48 and R53; capacitors C42 and C43 provide reactive termination.

1.7 I.F. Amplifiers

The common base stage ML3-A serves as a summing amplifier when a second crystal filter at 3FL1 - for A.M or L.S.B operation - is fitted.

ML3-B is under the control oo the RX 9V line and, in the receive condition, reduces the emitter degeneration of ML3-C to give the required increased i.f. gain.

ML4 is a tuned i.f. amplifier having a.g.c. applied to pin 4. The tuned circuit for frequency selective feedback around the amplifier is formed by L7 and C51.

Q10 is the second mixer drive amplifier.

1.8 Second Mixer

The second mixer, comprising ML5 and ML6-B, is of similar configuration and operation as the first mixer. The i.f. input mixed with the carrier insertion oscillator output produces audio across R92.

1.9 Audio Pre-amplifier

ML11 is an operational amplifier with feedback to restrict the audio bandwidth to 3kHz for improved selectivity.

1.10 A.G.C.

The a.g.c. detector Q19 takes drive from the audio pre-amplifier output via C103 and is biased, via the divider R158/159, from the RX 9V line. In the transmit condition therefore, this detector is inoperative.

With audio output above a predetermined level Q19, and hence ML10-A, are turned on. As a result, through D3 and the Darlington pair ML10-B and C, the voltage on the a.g.c. line is reduced.

Two times constants are used. C104, charging through R161 and discharging through ML10-A input, provides a fast attack and decay. C106, charging through R167 (when ML10-A is on) and discharging through R166 and R167, provides a relatively slow attack and decay. The purpose of the double time constant system is to allow transients to be absorbed without depressing the a.g.c. voltage which would necessitate a slow recovery. This is possible due to the fact that the fast acting time constant will both respond to and recover from the effect of a transient voltage, before the slower time constant has followed the response to any extent.

1.11 A.F. Output Amplifier

The class B output amplifier, Q24 to Q28, has a very high open loop gain heavily restricted by negative feedback, R193 and R189, to minimise distortion.

The speaker is a functional part of the circuit in providing a d.c. earth return to bootstrapping resistor R192.

The output level at the speaker is determined by the transceiver VOLUME potentiometer which precedes this amplifier.

2. EXCITER CIRCUIT

The mixers, filters and i.f. circuitry, used for both reception and transmission, have been discussed in the foregoing description of the receiver. When operating for transmissions however, following the gain controlled a.f. amplifier, the exciter gain is fixed. High stability components are used to ensure that gain variation, due to temperature changes and ageing are minimal.

2.1 A.F. Amplifier

Q1 is turned on when the RX 9V line is active hence, when the transceiver is in the receive condition, any signals appearing at the amplifier input are heavily attenuated by R1 and Q1.

The amplifier is designed to accept a.f. inputs which may vary in level over a range of better than 30dB. The threshold for a.g.c. is set to approximately -45dBm, which is suitable for the recommended ancillary items.

Transistor Q3 and those at ML1-C, D and E form a feedback amplifier with a high input impedance.

The peak detector ML1-A andB, fed with the amplifier output, controls the impedance of Q2 which, combined with that of series resistor R3, determines the amplifier input level.

C4 and R8 allow for a long decay time whereas the discharge of C4, by ML1-A through R10, provides a fast attack.

2.2 First Mixer

The a.f. amplifier output is at a level to ensure optimum performance of the first mixer where, combined with the carrier insertion oscillator output, a double sideband i.f. signal is produced. The carrier signal is balanced out by means of pre-set potentiometer R33.

2.3 I.F. Strip

As already stated, this section including the sideband filter, behaves as described for reception except that pre-set gain is operative.

Under the control of the TX 9V line, ML3-D shorts out the a.g.c. line to amplifier ML4 whilst ML3-E switches in pre-set R67 to determine the i.f. gain.

2.4 Second Mixer

The combination of the i.f. input and that from the channel oscillator produces $f_{ch.o} \pm i.f$ signals, the input components being balanced out by potentiometers R86 and R87 respectively. The i.f. output appears across pins 8 and 12 of ML5.

2.5 10MHz Low Pass Filter

This filter is a 5 pole network the elements of which are C62, C63, C64, L9 and L10. The second mixer output provides a high impedance source and termination is provided essentially by R94 in parallel with R96. The filter rejects any leakage of f_{cho} and i.f., also the image of the required f_{cho}-i.f signal.

2.6 Wideband Amplifier

This amplifier, comprising ML6-C, D, E, Q12 to Q16 and associated components, is driven in class B mode to conserve current. The inherently high gain of the amplifier is restricted by feedback resistor R103 for increased linearity. The amplifier is operated near to full output, therefore, any transients which may pass undetected by a.g.c. system, are clipped before entering the output power amplifier.

3. RECEIVE AND TRANSMIT SUPPORTING CIRCUITRY

3.1 First Mixer Drive

The first mixer drive circuit is essentially a switch which allows c.i.o. output in transmit and a.g.c. ch.o drive in receive. In receive mode the RX 9V line turns on amplifier ML7-B, which is connected to the ch.o output. At the same time, ML7-E is switched on which, simultaneously, earths the bias on the c.i.o. amplifier ML7-C and, in order to minimise the c.i.o. leakage in the ch.o, attenuates the c.i.o. level to ML7-C.

The amplifier ch.o drive current path is split into the emitters of ML7-A and ML7-D but, depending upon the relative bias of these transistors (ML7-A has a.g.c) anything between all and none of the ch.o current will pass through ML7-A. Thus, the drive level of the first mixer is gain controlled.

In transmit mode, the a.g.c. transistor is by passed in order to give constant c.i.o drive to the first mixer. Since the RX 9V line is off, ML7-B and E are turned off which turns on the c.i.o amplifier ML7-C the output from which is fed directly to the first mixer.

3.2 Second Mixer Drive

In receive mode the c.i.o. amplifier ML8-B is turned on and amplified c.i.o. output is fed directly to the second mixer. In transmit mode the TX 9V line both biases the ch.o amplifier ML8-C and turns on ML8-A which turns off the c.i.o amplifier ML8-B.

3.3 A.F. Oscillator

Unijunction transistor Q29 and associated components form an oscillator circuit the frequency of which is determined, essentially, by R197 and C139.

3.4 9V Regulator

The regulator is designed to operate between 10.5 and 16 volts and provides current limiting for protection against an accidental short. Reverse polarity protection is also a feature.

The differential amplifier ML10-D and E compares the output voltage against the reference, which is the voltage across Zener diode D5. The amplifier controls the output voltage via Q21 and Q20.

Should an accidental short occur across the 9V line, the voltage difference across R183, R184 and R186 will turn on Q23 which will sufficiently turn off ML10-E to limit the output current to approximately 1.5A.

Reverse polarity protection is provided by diode D4, together with current limiting resistors R181 and R187.

4. ALTERNATIVE OPERATING MODES (If specified)

4.1 A.M. Operation

Where the a.m. facility is required the following circuits are added to the basic Exciter/Receiver Board.

(a) A.M. Filter Switching

The line to board pin L carries 9V in a.m. transmit (and s.s.b transmit and receive) but is at 0V in a.m receive - see Transceiver Chassis Wiring Diagram ACC 3000. Hence, in a.m. receive, transistors ML8-D and E will be off and there will be no bias to the filter switching transistor 3Q9. Since the other filter switching transistor 3Q8 is permanently biased the signal will be fed via 3Q8 to the a.m. filter 3FL1.

Conversely, in a.m. transmit (and s.s.b transmit and receive) ML8-D will be on to bias 3Q9 and since the value of biasing resistors are such that 3Q9 base is more negative then 3Q8 base, the signal path is via 3Q9 to the sideband filter FL2.

(b) Limiting Amplifier

2ML9 and associated components comprise a very high gain amplifier which is driven by i.f. amplifier ML4. By virtue of the clipping action of 2ML9 the modulation information is removed from the a.m. signal to leave the carrier which is inserted into the second mixer instead of the c.i.o.

As ML8-E shorts out the bias to 2ML9 the amplifier is active only when ML8-E is turned off by the presence of OV at board pin L i.e. in a.m. receive state. Under the control of the line board pin L the c.i.o. is also switched off in a.m receive.

(c) Secondary Detector

When an a.m. signal is being received, the phase relationship between the i.f. drive and the reinserted carrier to the second mixer is such that a d.c. shift results between the two outputs arms of the second mixer (i.e. between ML5, 11 and ML8, 12). In the absence of modulation information on the carrier, the receiver gain will increase as no audio will be produced to operate the primary a.g.c. detector. Transistor 2Q11 will be turned on by the increasing d.c. difference of the two output arms of the second mixer, clamping a.g.c. line via ML10-A against further increase in receiver gain. Hence, i.f. overload is prevented.

(d) C.I.O. Re-insertion

A.M. transmissions are of one sideband and the carrier, the c.i.o. being re-inserted by the circuitry 2Q17, 2Q18 and associated components which is powered by the TX 9V line only. The board pin K is held at 9V in the s.s.b. state, removing the bias from 2Q17 thus this c.i.o. re-insertion circuitry is also inactive for s.s.b. transmissions.

With the 9V removed from pin K (a.m. transmit state) 2Q17 is turned on via 2R129 which action biases 2Q18, the c.i.o. amplifier and a pre-set level of the c.i.o frequency is fed to the i.f. summing amplifier, Q10. At the same time, through 2Q17, 2C81 and 2R134 the i.f. level is attenuated (approximately 6dB) such that the overall i.f. output (sideband plus re-inserted carrier) remains the same.

(e) A.F. Oscillator

The a.f. oscillator, Q29 is rendered inactive by permanently earthing pin AC. For tuning purposes in a.m. transmit the re-inserted carrier is used.

4.2 Switchable Sideband Operation

The additional filter to provide l.s.b operation occupies circuit position 3FL1 therefore, as described under AM Filter and Filter Switching above, selection is made by the permanently biased transistor 3Q8, when the bias from 3Q9 is removed. This is the case with OV at board pin L as provided by external switching i.e. USB/LSB switch at LSB position.

PART 2

SECTION 5

POWER AMPLIFIER TYPE 3019

1 A.C. SIGNAL PATH

The r.f. input is fed, via C18, R33 and R34, to emitter coupled Q10 and Q11 which are common base stages for r.f. signals. Any exciter i.f. present is trapped by L4 and C23, series tuned to 10.7MHz.

The proportion of the input signal amplified by Q10 is controlled by the bias on Q11 which, in turn, is governed by the a.l.c. circuitry described below.

Q12, fed from Q10 via C21, is a shunt feedback stage, the in band gain of which is determined by R37 while C24 provides a high frequency roll off.

The emitter follower Q13 drives the first push-pull class B stage Q14 and Q15, via the phase splitting transformer T1. The reactive load on Q13 is series damped by R46, 47, 48 and 49 whilst parallel dampling is provided by R51 and R52.

The gain of Q14 and Q15 is determined by R53 to R58 and interstage coupling is provided by transformer T2 which also applies negative feedback around the second push-pull class B amplifier Q16 and Q17.

In band gain of Q16 and Q17 is determined by R64, 65, and 69 whilst C33 to C36 roll off out of band signals. The input impedance to Q16 and Q17 is series damped by R71 to R74; paralleling damping is provided by R62, 63, 77 and R78.

A possible out of band resonance, involving the reactive output impedance of the amplifier and aerial, is damped by R79, R81, C39 and L12; further protection from this resonance and voltages induced in the aerial by other transmitters is provided by D8 and D9.

2 D.C. BIAS

The transistors Q12 and Q13 form a feedback pair for direct currents and the resulting voltage across R46 to R49 always equals the base emitter voltage of Q12. This voltage, via T1 secondary winding, biases Q14 and Q15 for class B operation. Since Q12 shares the heat sink of Q14 and Q15 the bias voltage is temperature compensated.

Transistors Q7 and Q8 also form a feedback pair the d.c. output voltage of which is a function of Q7 base emitter voltage and the feedback resistors R19, R21 and R22. This voltage, set by R22, biases the output transistors Q16 and Q17 and since Q7 is physically in close proximity to the output transistors, the voltage is temperature compensated.

The power requirement from Q8 is also reduced by the initial bias as a result of the collector current from Q13 fed via R71 to R74 and T2.

3 A.L.C.

3.1 Peak Output Detecting and Limiting

The power amplifier output current sensed by T4 develops an r.f. voltage across R17, R82. A d.c. voltage is added by the divider formed by RB1 and R18, RB1 being a p.t.c. thermistor sensing heat sink temperature. The voltage detected by D2 and C7 therefore, is dependent upon both the output current and the temperature of the heat sink. This voltage, amplified by Q5, Q4 and Q3, is used to control the base of Q11 so that the output current is held at a safe value.

The collector currents of Q10 and Q11, determined by R34 and Zener diode D7, result in a voltage drop across R3, 4 and 5 which is independent of supply voltage variations and adjustable by s.o.t. resistor R4. Referenced against the voltage, Q6 and D5 will conduct to charge C5, when the peak collector to emitter voltage of Q17 falls below a certain level. The resulting a.l.c. action limits the drive level to prevent saturation of Q16 and 17, and a linear output is maintained irrespective of variations in battery voltage.

The a.l.c time constants are set by C5 which is rapidly charged by Q5 (or Q6) and slowly discharged through the complementary Darlington pair Q3 and Q4, in parallel with R10.

3.2 Average Output Detecting (A.M. Operation)

C6 is charged through D3 by the output current sensed by T4, or through D4 by the voltage across T3 primary, whichever is the greater. With Q1 not conducting, which is the case in a.m. operation, the voltage excursions across C6 are averaged by R4, C4 and R16. The level across C4 may be such as to charge C5 via D1. Thus, the a.l.c. action is responsive to average output level as well as the peak detecting circuitry described. In s.s.b. operation, +9V is applied to pin E of Q1 the conduction of which disables the averaging a.l.c. circuit.

3.3 Aerial Tuning Indicator

R25 and 26 form a voltage divider between T3 primary and T4 secondary (voltage and current sensing respectively). Any r.f. voltage at the junction of the divider is detected by D6 and C15 to drive, after amplification by Q9, the transceiver front panel TUNE lamp.

When the voltages across T3 primary and T4 secondary are both equal and in phase, corresponding to correct matching of the aerial, maximum r.f. voltage will be present at R25, R26 junction, corresponding to maximum lamp brilliance.
Where an internal A.T.U is fitted, the front panel tune lamp is under the control of a more sensitive voltage and current camparitor, necessary for tuning to an aerial. This circuit is an integral part of the A.T.U assembly which is separately described.

PART 2

SECTION 6

TWO TONE GENERATOR BOARD TYPE 4186

The use of this board provides the 'emergency call' facility whereby a two tone signal is transmitted for a pre-set period.

With OV applied to pin G, via the transceiver CALL button, C1 is charged and, at the same time, Q1, Q2, Q3 and Q6 are turned on. The on state of Q3 turns on two a.f. oscillators whilst the on state of Q6 energises the P.T.T. relay.

On release of the transceiver CALL button, C1 is slowly discharged through R6 to a level where Q1, referenced against a voltage determined by R3 and R4, is turned off which, in turn, switches off all other circuits.

The two oscillators are similar in operation therefore only one, Q4 and associated components, will be described.

The collector load of Q4 is a parallel tuned circuit (L1, C4) providing positive feedback to the base of Q4 via R8, therefore, the circuit oscillates at a frequency defined by the tuned circuit. Clamping diodes D1 and D2 limit the drive such that Q4 operates linearly.

The outputs from the two oscillators are combined by R10, R14 to provide a two tone output at pin C.

With the microphone P.T.T. control inactive, pin B is shorted to earth and the oscillator load is provided by R16.

PART 2

SECTION 7

AERIAL TUNING UNIT TYPE 3032

1. TUNING CIRCUIT

1C7 is in parallel with the aerial circuit and, when adjusted, presents a 50 ohm load in series with re-actance. The re-actance is cancelled by the series tuned circuit 1C6 and 1L1.

2. REFLECTOMETER TYPE 4509

The differential pair 2Q1, 2Q2 is biased at approximately 3.5V as determined by 2R1 and 2R2. With no r.f. input (pins A and B) 2Q1 is turned on via 2R7 so that 2Q2 and hence the lamp driver 2Q3, is turned off.

With r.f. input the current is sensed by 2T1 and the voltage, via 2C2, is attenuated by 2R4 and 2R3.

When the a.t.u. is tuned to present a 50 ohm resistance to the input the summed derivatives of the r.f. current and voltage seen at the anodes of 2D2 and 2D1 are, respectively, in phase and anti-phase. The peak detector circuits formed by these diodes and associated components provide d.c. voltage drive to the differential pair.

Thus, under matched aerial conditions, the drive to 2Q2 is at maximum consequently the drive to the TUNE lamp via 2Q3 and pin E is also maximum. Conversely, where unmatched aerial conditions prevail, since there will be a phase difference between the input current and voltage, the derivatives at 2D2 and 2D1 will neither completely cancel nor equal the summation of the matched state with the result that there will be less drive, if any, to the TUNE lamp.

PART 3

MAINTENANCE

RECOMMENDED TEST EQUIPMENT (OVERLEAF)

RECOMMENDED TEST EQUIPMENT

(a)	TRA 7928 Test Jig	Racal JT197
(b)	R.F. Signal Generator with carrier modulation facility, calibrated output attenuation, 2uV r.m.s. e.m.f. at 50 ohm impedance level.	Airmec 201A
(c)	Two Tone Generator with flat frequency response, output capability down to -70dBm into 600 ohms	Marconi TF2005R
(d)	Oscilloscope frequency response to at least 15MHz, plus compensated 10:1 probe.	Telequipment S43 with Plug In TS41 and C2
(e)	Frequency Counter, up to 25MHz, Sensitivity better than 25mV r.m.s. input resistance 50 ohms or greater, maximum input capacity, including cable, 100pF.	Racal 806R-2
(f)	Multimeter 20,000/volt	AVO 9
(g)	50 ohm Non-Reactive Load, capable of dissipating 25W or better alternatively R.F. Power Meter	Racal JT162 Marconi TF 1152A/1
(h)	Electronic Thermometer with Probe operable in 65 - 95^{0}C range	Dependotherm MRC 3 (with 50°-100°C Probe)
(j)	Power Source 12.6V (approx.) at 6A	12V Battery - Vehicle type with Cable - Racal 3046 alternatively A.C. Power Unit Racal PU 7717

PART 3

SECTION 1

DISMANTLING & RE-ASSEMBLY

TOP VIEW

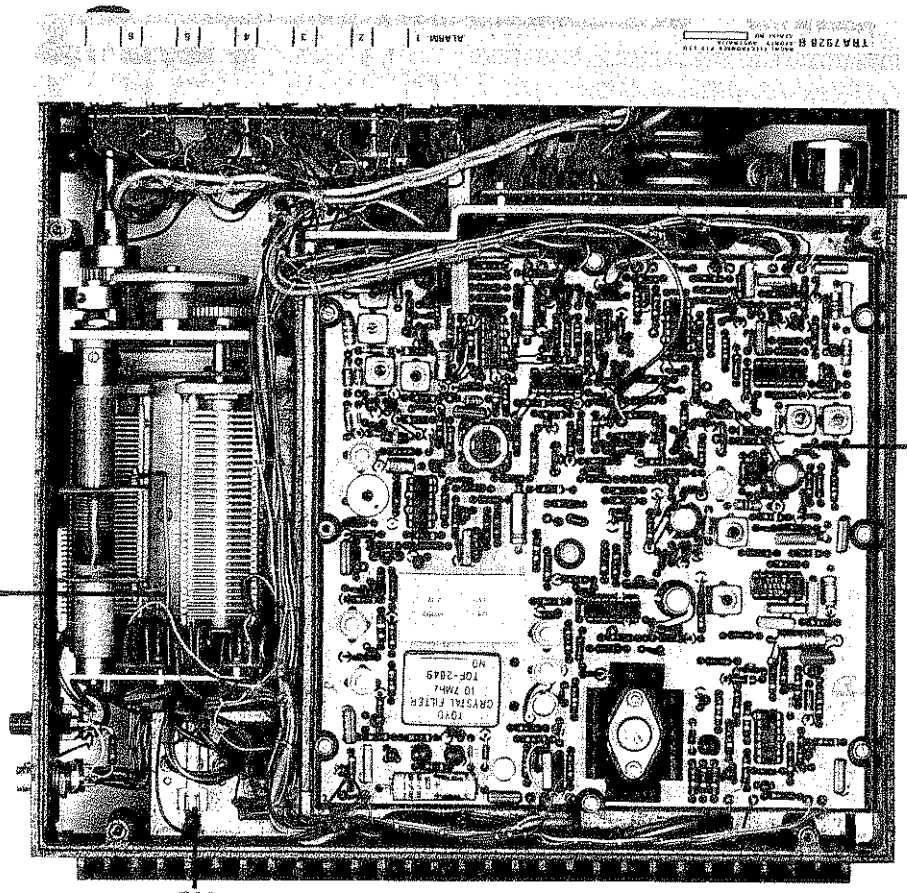

A.T.U. ASSEMBLY 3032

UNDERSIDE VIEW

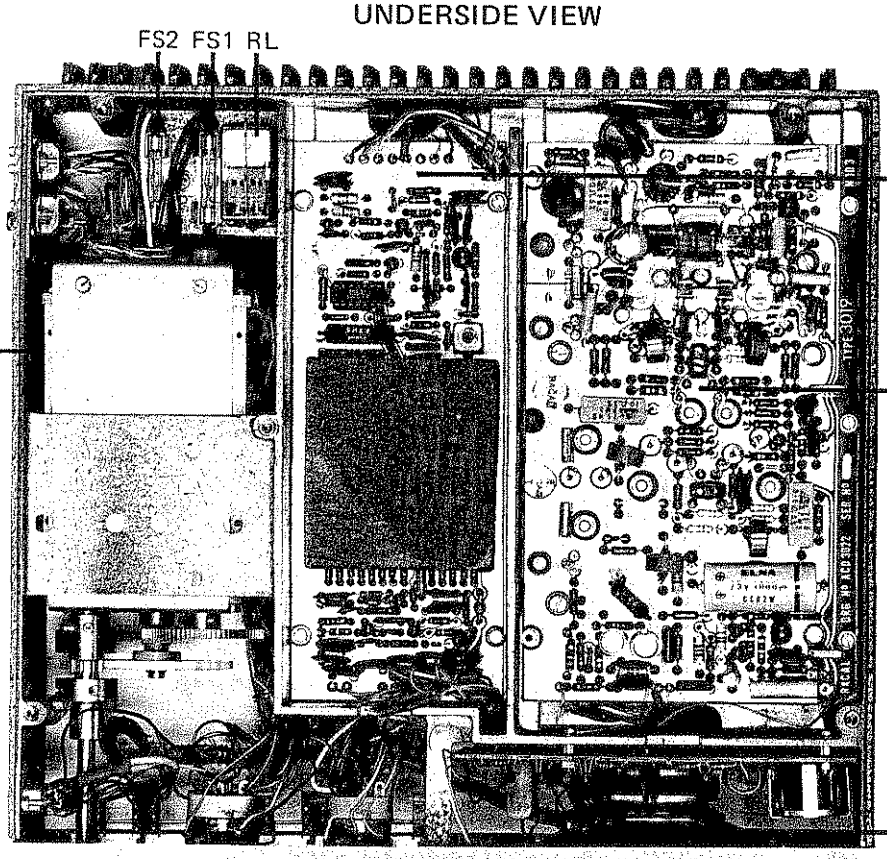

RACAL
The Electronics Group

TRANSCEIVER TRA 7928 CHASSIS LAYOUT

DISMANTLING & RE-ASSEMBLY

1 INTRODUCTION

The Transceiver TRA 7928 is constructed as an aluminium cast chassis with recessed compartments to locate the individual modules. There is a top and bottom aluminium cover plate giving complete access to all components. The chassis front panel, to which all the controls and the loudspeaker are mounted, is faced with a moulded A.B.S. escutcheon.

The arrangement of modules (see illustration opposite) is such that any one module can be easily and separately removed.

The transceiver top cover plate is secured by four 4BA x ¼ inch and one 6BA x ½ inch pan head screws whilst the bottom cover plate is held by five 4BA x ¼ inch and two 6BA x ¼ inch pan head screws. With these covers off the order in which the modules are removed or replaced, according to the groups of instructions below, is immaterial.

2 REMOVAL OF EXCITER/RECEIVER BOARD TYPE 3028

This board is held by:

8 6BA x ¼ in. ch. hd screws, plain and crinkle washers

1 6BA x 1 in. pillar and crinkle washer

With these items removed and with the loom leads still attached the board may be lifted to give access to the underside for tests and maintenance purposes.

If it is required to replace the board a note of the wire connections to appropriate board pins should be made for reference when re-connecting to the replacement board.

3 REMOVAL OF POWER AMPLIFIER 3019

IMPORTANT

When re-assembling this module the following general requirements should be strictly observed.

Surfaces at fixing points are to be clean and all fixing screws made fully tight for good bonding.

At the heat sink, all metal to metal surfaces serving to conduct heat, to be clean and a film of thermal conducting compound applied to these surfaces. This is particularly important when replacing power transistors, the compound being applied to the transistor surface making contact with the heat sink. The compound is also applied to those areas of the heat sink making contact with the transceiver chassis.

Proprietary types of this compound are:-

Redpoint - 'Thermopath 167'

Thermalloy - 'Thermocote'

The screws securing this board are:-

6	4BA x 3/8 in. ch. hd,plain and crinkle washers
3	6BA x 1/4 in. ch. hd, plain and crinkle washers
2	6BA x 1 1/8 in. pillars and crinkle washers

With these items removed and with the loom leads still attached the board may be raised, to give access to the underside to which the head sink is attached.

IMPORTANT

Whilst operational tests may be safely performed with the p.a. removed from the transceiver chassis, to prevent operation of thermal protection circuitry due to the limitations of the heat sink sub-assembly, r.f. power tests should be of a low duty cycle.

If it is required to replace the board or to separate the heat sink from it (see below) disconnect the leads to the board taking note of the appropriate board pins used for these connections.

Separation of Heat Sink and Board

NOTE:

When carring out this work extreme care must be taken to prevent fracture of thermistor (RB1) terminations and/or bending of power transistor Q13, 14 & 15 pins. In re-assembling particular care must be taken to ensure the flat copper spacers, used for thermal conductivity of Q16, 17 are correctly positioned otherwise these transistors may be damaged when re-securing to heat sink.

At the component side of the board remove:-

nuts and washers securing Q13, 14 and 15

screws securing Q7 (between Q16 & 17) Q8 and Q12

screws securing Q16 and Q17.

Carefully separate board and heatsink to the extent allowed by thermistor RB1 leads to give complete access to the board printed circuit for maintenance purposes.

Re-assembly

Recoat with thermal conducting compound, both surfaces of:-

mica washers for Q7, 8 and 12

flat metal spacer for Q16 and 17

Position mica washer for Q7 and resecure this transistor to the heat sink. Carefully position the mica washers for Q8, 12 and the flat metal spacers for Q16 17 and then bring board and heat sink together ensuring that the washers/spacers do not become displaced and the pins of Q13, 14 and 15 locate board sockets.

Check alignment of Q16, 17 metal spacer holes with centralising tool then return screws to fix.

Return screws to secure Q8 and Q12.

Replace nuts and washers to secure Q13, 14 and 15.

Check that heads of fixing screws for Q7, 8, 12, 16 and 17 are clear of the p.c. board earth plane.

4. REMOVAL OF OVEN OSCILLATOR UNIT

Remove the polyurethane cover surrounding oven casting.

Remove the screws securing the board which are:-

4 6BA x ¼ in. ch. hd. with plain and crinkle washers.

IMPORTANT

The board earth plane is not at the same potential as the transceiver chassis therefore the washers used beneath the fixing screws must be of sufficiently small size to clear the earth plane of the board when returned to its location.

With the leads still attached lift the board to give access to underside to which a polyurethane pad is friction held over the oven circuit. Remove this pad to give complete access to board tracks for servicing purposes and replacement of crystals (see below). If it is required to replace the board a note of the wire connections to appropriate pins should be made for subsequent reference.

Removal of Channel Oscillator Crystals

Board Type 3047

The channel oscillator crystals are eased out of the board by using a suitable tool (18 B&S guage wire will suffice) through the hole between the crystal pin sockets at the underside of the board.

Board Type 3044

The channel oscillator crystals are withdrawn from the board by use of a small pair of pointed pliers or tweezers. Particular care must be taken not to place any strain on the crystal holder pins.

Removal of Carrier Insertion Oscillator Crystal (10.7MHz)

On both boards types 3047 and 3044 the c.i.o. crystal termination must firstly be unsoldered before it can be withdrawn.

5. REMOVAL OF TWO TONE GENERATOR BOARD TYPE 4186

Disconnect the leads to the board pins taking note of these connections for subsequent re-connection.

The board is secured to the transceiver chassis by four 6BA screws, washers, spacers, and nuts thus.

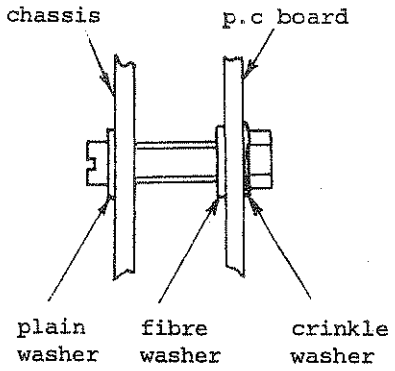

On removing this hardware and the leads the board is free to be withdrawn but from the underside of the transceiver only. DO NOT attempt to withdraw the board from the top of the transceiver since board capacitors will foul the loudspeaker.

6. REMOVAL OF AERIAL TUNING UNIT

Unsolder leads to the reflectometer board of A.T.U. assembly taking note of these connections for subsequent references.

Unsolder the co-axial lead to the AERIAL and EARTH terminals.
Behind the transceiver chassis front panel remove circlip on A.T.U. control shaft and slide shaft away from main A.T.U. assembly.

Remove three 6BA x 3/8 in ch. hd screws with crinkle washers securing A.T.U. to chassis and withdraw assembly.

Remove AERIAL control knob from shaft and withdraw shaft taking care not to lose shim, washer which was located behind the circlip previously removed.

7. REMOVAL OF ITEMS MOUNTED TO FRONT PANEL

Remove the rotary control knobs, (collet type fixing).

The escutcheon is secured to the chassis by four 4BA x 3/8 in ch. hd screws entered from rear face of chassis front panel whilst the indicator lamp is held to the escutcheon by adhesive. On removing the four 4BA screws, therefore, carefully ease the escutcheon away from the chassis to the extent of the indicator lamp leads. With the escutcheon thus separated from the chassis access is provided to the screws by which the controls and the loudspeaker are mounted to the chassis.

PART 3

SECTION 2

OVERALL TRANSCEIVER TRA 7928 CHECKS

OVERALL TRANSCEIVER TRA 7928 CHECKS

1. TEST EQUIPMENT REQUIRED

In these overall transceiver checks a Multimeter (20,000 ohm/volt) and a soldering iron only is required.

2. INSPECTION

Ensure the equipment power is switched OFF.

Disconnect the power and aerial leads.

Remove both the top and bottom covers and inspect:-

(a) Fuses - (2 x 10A) check that these are intact

(b) Wiring - Check for good contact by the connections of leads to:-

all printed circuit boards

the relay $\frac{RL}{4}$

switches and controls mounted to the front panel.

(c) A.T.U. 3032 - manipulate the control knob and check that:-

i. Stator and rotor plates of the two capacitors are not shorting.

ii. When reversing direction of travel, the gears are stationary for one turn (360°) of the control knob (FINE TUNE) i.e. only the direct coupled right hand capacitor is adjusted. If, due to friction, the gearing is not slipped for this FINE TUNE control add a few drops of light lubricating oil between the control shaft and the gear immediately behind the control knob.

3. D.C. SUPPLY CHECK

NOTE: The transceiver chassis is isolated from the electrical earth of the equipment therefore the chassis must not be used as the earth point. All d.c. voltages are to be measured relative to the ground plane of any board.

Connect the 12V d.c. supply and switch transceiver ON.

Connect the microphone

Carry out voltage checks as given in the following table.

TABLE 1

TEST POINT BOARD	PIN	SUPPLY	SWITCHED STATE	VOLTAGE (V)	ACTION WHERE VOLTAGE IS INCORRECT.
3028	W	INPUT POWER	ANY	12	Check supply source, fuses and wiring to board pin W. Refer to Exciter/Receiver Board Tests for 9V Regulator check.
	N	REGULATOR O/P	ANY	9	
	D	RX 9V RAIL	RECEIVE	9	
	J	TX 9V RAIL	RECEIVE	0	
	L		RECEIVE SSB	9	
3019	A	PA LINE	RECEIVE	0	Check relay $\frac{RL}{4}$ and wiring to relay. Where voltage at pin L of Board 3028 is incorrect also check CLARIFIER TUNE - AM control and wiring to this control.
	D		TRANSMIT	0	
	J	TRANSMIT	TRANSMIT	9	
	L		TRANSMIT	9	
3019	A		TRANSMIT	12	
3028	L		RECEIVE AM	0	
	L		TRANSMIT AM (Where AM facility is provided)	9	

4. LOCATION OF FAULTY MODULE

The performance of the transceiver will, to a large extent, indicate the probable area of malfunctioning as shown by the following table.

TABLE 2

SYMPTOM	ACTION
Transmitter functional - Receiver is not	Exciter/Receiver Board 3028 prime suspect - refer to Tests on this board at section 4.
Receiver functional - Transmitter is not	Fault may be in Exciter/Receiver Board 3028 or Power Amplifier 3019. Perform check 4.1 below
Transceiver non-functional on one channel	Crystal of non-operative channel is likely failure. Perform check 4.2 below
Transceiver non-functional on any channel and there is (a) noise output from speaker	Channel oscillator suspect Perform check 4.3 (a) below
(b) no noise output from speaker	Carrier Insertion Oscillator suspect - perform check 4.3 (b) below

4.1 Receiver Functional, Transmitter Not

To isolate the fault to either the Exciter/Receiver Board 3028 or Power Amplifier 3019 proceed as follows:-

Switch transceiver off.

At the Exciter/Receiver Board 3028 link:

TP1 (TX a.f. amplifier output) to pin AB (speaker amplifier input).

Set both VOLUME AND CLARIFIER controls to mid point of travel.
Switch transceiver on.

Operate microphone P.T.T. control and speak.

If speech is not heard from the speaker the a.f. amplifier at the Exciter/Receiver Board is faulty.

Switch equipment off and disconnect the lead from TP1 to pin AB.

Return the power and with the P.T.T. control operated check for voltages at the Exciter/ Receiver Board as under:-

TEST POINT	VOLTAGE (V)
ML6 pin 11	5.0
Q14 emitter	5.2
ML7 pin 9	1.5
ML8 pin 9	1.9

The board is faulty if any of these voltages are found incorrect otherwise the Power Amplifier 3019 is suspect.

Detailed tests on the Power Amplifier are given at section 5.

4.2 Transceiver Non Functional On One Channel

Check crystal of non-operative channel as follows:-

Set transceiver for s.s.b. operation.

Select various channels including non-operative channel.

The noise output on non-operative channel will be noticeably higher than that on operative channels.

Lift off the polyurathane insulating cover from the oven and with reference to the appropriate oscillator drawing (ACC3047 or ACC 3044) identify the oscillator crystal for the faulty channel.

Check the crystal of this channel by simply changing the position with one of another channel and observing, by the receiver noise output, whether the fault has followed the change of position.

If the transposition of crystals does not provide proof of a crystal fault ascertain whether the switching line to the suspect oscillator is at OV. Should this be so then the oven oscillator board, other than the crystal is faulty.

4.3 Transceiver Non Functional On Any Channel

(a) Noise Output From Speaker - (Channel Oscillator Check)

Set transceiver for s.s.b. receive operation.

At Exciter/Receiver Board 3028 short pins G & H (Channel Oscillator input).

If the noise output increases the fault does not lie with Oscillator Unit.

(b) No Noise Output From Speaker - (Carrier Insertion Oscillator Check)

If the transceiver includes a.m. operation, switch to this mode.

A noise output in a.m. mode where there was no noise output is s.s.b. mode confirms that the carrier insertion oscillator is at fault.

If a.m. facility is not provided proceed thus:-

Oven Oscillator Unit 3047

The c.i.o. is faulty if a.g.c. voltage at Q9 collector is $\geq$4.0V.

Oven Oscillator Unit 3044

A functional oscillator should provide approx. 6V at the collector of Q10. However, this check does not prove, conclusively, that the oscillator is not at fault. For more detailed checks of oscillator to isolate the fault, refer to Section 3.

PART 3

SECTION 3

TESTS ON OVEN OSCILLATOR UNIT TYPE 3044

1. INPUT/OUTPUT D.C. VOLTAGES
2. OVEN HEATING AND CONTROL
3. CHANNEL OSCILLATOR
4. CARRIER INSERTION OSCILLATOR

RACAL
The Electronics Group

TESTS ON OVEN OSCILLATOR UNIT TYPE 3044

The following information has been prepared so that the existence of a fault condition within this unit can be established.

The owner is cautioned however that highly specialised skills and equipment are needed to service this item and fault rectification by those unfamiliar with this type of equipment should not be attempted.

If a fault is proved the return of the complete assembly to Racal Electronics Pty Ltd for repair is strongly recommended.

1. Input/Output D.C. Voltages

With the oven oscillator in situ. and with the parent equipment switched on, d.c. voltages at board pins should be as indicated in circuit diagram.

2. Oven Heating and Control

When the oven is cold the current drawn should be approximately 1.5A which decreases during the warm up period to a final current in the range 100 - 400mA depending on ambient temperature.

For an ambient temperature of 20 to 25°C an oven temperature of 70°C should be reached in approximately ten minutes from switch on.

Physically check (hand on oven) that oven is being heated. Check current drawn using an ammeter in series with board pin U.

Should this current be substantially outside the given range trace the faulty component by taking voltage measurements with reference to the values shown on the circuit diagram.

3. Channel Oscillator

If there is oscillator output on any of the channels used, check crystal(s) of non operative channel(s) by substitution.

CAUTION

The oven is operated at 70°C therefore care must be exercised when handling crystals at this temperature.

To Remove a Crystal

Switch power OFF.

Remove oven polyurethane from cover. Carefully ease crystal holder out of position, using a small pair of pointed pliers or tweezers, taking particular care not to place any strain on the crystal holder pins.

For further checks on the channel oscillator take appropriate voltage measurements and compare with values given on the circuit diagram ACC 3044.

4. Carrier Insertion Oscillator

Check serviceability of the c.i.o. crystal by substitution with a known good 10.7MHz crystal.

NOTE: To remove the c.i.o. crystal the termination must first be unsoldered from the board.

If the crystal is eliminated as a fault take appropriate voltage measurements and compare values with those given on the circuit diagram.

PART 3

SECTION 3

TESTS ON OVEN OSCILLATOR UNIT TYPE 3047

1. INPUT/OUTPUT D.C. VOLTAGES
2. OVEN HEATING & CONTROL
3. CHANNEL OSCILLATOR
4. CARRIER INSERTION OSCILLATOR

TESTS ON OVEN OSCILLATOR UNIT TYPE 3047

The following information has been prepared so that the existence of a fault condition within this unit can be established.

The owner is cautioned, however, that highly speciallised skills and equipment are needed to service this item and fault rectification by those unfamiliar with this type of equipment, should not be attempted.

If a fault is proved, the return of the complete assembly to Racal Electronics Pty Limited for repair, is strongly recommended.

1. Input/Output D.C. Voltages

With the oven oscillator unit in situ. and with the parent equipment switched on, d.c. voltages at board pins should be as indicated in circuit diagram.

2. Oven Heating and Control

When the oven is cold the current drawn should be approximately 1.6A which decreases during the warm up period to a final current of 300mA at the operating temperature of 70°C. In an ambient temperature of 20 to 25°C, an oven temperature of 70°C should be reached in approximately five minutes from switch on.

Physically check (hand on oven) that oven is being heated. Check current drawn using an ammeter in series with board pin J.

Should this current be substantially outside the given range, trace the faulty component by taking voltage measurements with reference to the voltages shown on the circuit diagram.

3. Channel Oscillator

If there is oscillator output on any of the channels used, check crystal(s) of now operative channel(s) by substitution.

CAUTION:

The oven is operated at 70°C therefore care must be exercised when handling crystals at his temperature.

To remove a crystal:-

Switch power off

Lift off oven polyurethane foam cover

Remove the 4 6BA ch. hd screws securing the p.c board to chassis.

Lift the board sufficiently to enter a suitable tool (a piece of heavy gauge wire will suffice) through the board hole beneath the crystal and ease crystal from the location.

For further oscillator checks carry out appropriate voltage measurements and compare with values given on the circuit diagram ACC 3047.

4. Carrier Insertion Oscillator

Check serviceability of the c.i.o. crystal by substitution with a known good 10.7MHz crystal.

NOTE: To remove the c.i.o. crystal the terminations must first be unsoldered from the board.

If the crystal is eliminated as a fault, take appropriate voltage measurements and compare values with those given on the circuit diagram.

PART 3

SECTION 4

TESTS ON EXCITER RECEIVER BOARD 3028

1. D.C. CHECKS
2. A.C. CHECKS

TESTS ON EXCITER/RECEIVER BOARD 3028

1. D.C. Checks

The d.c. voltages which should be seen within the various circuits are shown on the circuit diagram (Drawing ADC 3028).

In the light of observations made in performing the overall transceiver checks of section 2 , carry out d.c. voltage checks in the suspect areas as tabulated below.

SYMPTOM	SUSPECT CIRCUIT(S)
9V at pin N not available USB Transmission but no reception	9V regulator ML10D to Q23 a) RX Filter b) Filter switch Q4, Q5 c) RX A.F. Amplifier ML11 d) A.F. Power Amp Q24 - Q28 e) A.G.C. Detector Q19 - ML10C (without signal input, TP6 to ground should show >3.5V) f) First mixer drive ML7 g) Second mixer drive ML8A-C h) I.F. switching ML3B, D & E
USB Reception but no transmission	a) TX A.F. Amp switch Q1 b) TX A.F. Amp Q2, ML1 c) TX R.F. Amp ML6C, D, E Q12-16 d) First mixer drive ML7C & E e) Second mixer drive ML8A-C
No Reception or Transmission	a) TX A.F. Amp Check TP1 Voltages b) First Mixer Q6, Q7, ML2, 3Q8, 3Q9 c) Filter Switches (if fitted) ML8-D d) I.F. Amplifiers ML3, 4 and Q10 e) Second Mixer ML6 A & B, ML5, f) First Mixer Drive ML7 g) Second Mixer Drive ML8 A - C h) USB Filter FL2
No Reception in A.M.	a) A.M Switching ML8D, E & 3Q9 b) A.M.Limiting Amp 2ML9 c) Secondary AGC Detector 2Q11 (Remove & Check) d) A.M Filter 3FL1
No Transmission in A.M Non Operative in LSB	C.I.O Re-Insertion 2Q17, 2Q18 a) LSB Switching ML8D, 3Q9 b) LSB Filter 3FL1

2 A.C. Checks

Ensure transceiver power is switched off.

Disconnect the core of co-axial cable at pin P of Exciter/Receiver Board 3028 (Power Amplifier 3019 disconnected).

If available connect the Test Jig JT197 to the transceiver AUDIO socket.

Connect power and switch transceiver on.

Select any working channel and switch to RECEIVE U.S.B. operation.

Using the oscilloscope, earthed to a convenient point of the exciter receiver board earth plane (not transceiver chassis) perform the checks given in the following table.

CONDITION	TEST POINT	SIGNAL	LEVEL	REMARKS
RECEIVE USB	PIN F	C.I.O. (10.7MHz)	150mV p-p	If not present CIO is faulty. See separate tests on Oven Oscillator Unit.
RECEIVE USB	PIN H	CH.O	300mV p-p	If not present CH.O is faulty. See separate tests on Oven Oscillator Unit.
RECEIVE USB	TP 5	C.I.O.	200mV p-p	Proves 2nd mixer drive functional.
TRANSMIT USB	TP 5	CH.O	300mV p-p	If either signal level is not
TRANSMIT USB	ML7 PIN 1	C.I.O.	300mV p-p	present 1st mixer drive circuit is at fault.
RECEIVE USB	ML7 PIN 1	CH.O	500mV p-p	Since ch.o output is under a.g.c control, where signal level is not obtained, check whether ML7 pin 2 d.c voltage is less than ML7 pin 4. If this is the case, 1st mixer drive is at fault; if not the fault lies with the a.g.c. detector.

Connect a single tone generator (providing, preferably, a balanced output) to the test jig AF INPUT terminals and set for a 1kHz output.

Switch the transceiver to TRANSMIT USB and with oscilloscope at pin C of the Exciter/Receiver Board, adjust the generator output level for an oscilloscope reading of 100mV p-p.

Perform checks as in following table:-

CONDITION	TEST POINT	SIGNAL	LEVEL	REMARKS
TRANSMIT USB	TP1	1kHz	120-250mVp-p	Obtained level should remain within ±20% when generator level is varied between 30mV and 1V p-p. If not, a fault exists in either the TX AF Amp. switch Q1 or the TX AF Amp.
TRANSMIT USB	TP2	2 tone i.f. (10.7MHz)	1.2-30Vp-p	1st Mixer functional
TRANSMIT USB	TP3	"	0.4-1.0Vp-p	USB/LSB switch (if fitted) USB filter and two i.f. amplifiers functional.
TRANSMIT USB	TP4	"	140-220mVp-p	Remaining i.f. amplifier functional.
TRANSMIT USB	PIN P	Exciter Output at channel frequency	4-5.5Vp-p	If level is close but outside limits realignment may be necessary. Otherwise 2nd mixer, TX Filter or TX RF Amplifier is at fault.
TRANSMIT USB CLARIFIER/ TUNE-AM control set to TUNE-AM position. No audio input.	PIN P	Exciter Output		AM FACILITY NOT FITTED A.F Oscillator is faulty if output is not at least half level seen in s.s.b. state. AM FACILITY FITTED C.I.O re-insertion oscillator is faulty if output is not approx. half that seen in s.s.b. state.
TRANSMIT LSB (Where fitted for USB/LSB Operation. CLARIFIER/ TUNE-AM control tuned clockwise out of TUNE-AM position. Audio returned.	PIN P	Exciter Output		An output within 30% of that observed in USB verifies mode switching (ML8D, 3Q9) and LSB filter (3FL1) functional.

The exciter section of the board and the receiver circuits which are shared with the exciter have now been fully checked.

Continue with checks on the receiver section as follows:-
Disconnect the audio generator.
Connect the r.f. signal generator to the transceiver aerial input.

NOTE: The connection may be made to the AERIAL socket if an internal aerial tuning unit is not fitted. Otherwise, the a.t.u. must be by-passed by making the connection to pins B & A (earth) of the exciter receiver board.

Carry out the checks tabulated below, measuring the signals, unless stated otherwise, with an oscilloscope earthed to the exciter/receiver board earth plane.

CONDITION	TEST POINT	SIGNAL	LEVEL	REMARKS
RECEIVE USB generator signal at 200mV (100mV pd) rms CW in 2-10MHz range.	TP1	R.F.	150-300mVp-p	If this voltage is not present either RX Filter switch Q4, Q5 faulty or there is a possible short-to-can of one of the filter coils.
RECEIVE USB No input signal.	TP6	A.G.C	>4Vd.c	A.G.C Detector faulty if this voltage not seen.
RECEIVE USB Generator re-connected and set for 2mV emf output. Tune generator to receiver for an audio response.	PIN U	A.F Output (Low level)	1.4-2.2Vp-p sinusoidal	Correct
			<1.4Vp-p	RX AF Pre-amp (ML11 and associated components) OR Switching circuits ML3B, D, E faulty
			>2.2Vp-p (possibly square wave)	Perform a.g.c check as follows
	TP6 (using voltmeter)	A.G.C	>3V d.c. <3V d.c.	A.G.C detector faulty. 1st mixer drive ML7 is suspect
RECEIVE USB Generator signal reduced to 2uV emf	PIN U	A.F Output (Low level)	>½ level obtained for 2mV input signal.	If satisfactory level not obtained re-alignment may be necessary (see alignment procedures) otherwise switching circuits ML3B, D, E or I.F Amp (ML4) is faulty.
RECEIVE USB Generator signal increased to 2mV emf	AA	Amplified AF Output	>8V	By adjustment of VOLUME control if this control and AF Amplifier is functional.
RECEIVE AM (If facility provided) Generator output at 200mV emf 1kHz 30-50% modulated tune generator for a.f. response.	PIN U	AF Output (Low level)	1.4-2.2Vp-p sinusoidal	AF Limiting Amp. 2ML9 or switch ML8C is suspect if this output is not obtained.
	TP6 (Using Voltmeter)	A.G.C		Note d.c. level.
Re-adjust generator output for 200mV emf cw	TP6	A.G.C		If increase in a.g.c. d.c. level is more than 0.25V, secondary detector 2Q11 is suspect.

PART 3

SECTION 5

TESTS ON POWER AMPLIFIER 3019

1. PREPARATION
2. D.C. CHECKS
3. A.C. CHECKS

RACAL
The Electronics Group

TESTS ON POWER AMPLIFIER TYPE 3019

CAUTION: When servicing this module, extreme care must be taken to ensure that board pins and tracks are not shorted to the earth plane by test equipment leads and probes, which could result in the destruction of the output transistors.

1. Preparation

With the transceiver switched off connect a 12.5V, adjustable current limiting, regulated supply and set the current limit to 2.5A.
Set the transceiver CLARIFIER control to mid range.
Switch transceiver ON and allow approximately 5 minutes oven unit warm up time for stabilization of current drawn by the oven.

The following checks should be performed in the order given to quickly establish the area and/or component at fault. Where there is a need to replace a component, reference should be made to the dismantling instructions.

2. D.C. Checks

Unsolder the core of the co-axial cable at pin G of the p.a. Observe transceiver current drain in RECEIVE then, switch to TRANSMIT and note the increase in the current. According to the increased current proceed as indicated below.

Current Increase correctly within limits of 1.25 and 1.75A	Perform d.c. checks as given in Tables 1 & 2 and/or with reference to values shown on the power amplifier circuit diagram.
Current increase below limit of 1.25A.	Check: 1. Operation of relay, RL/4 2. 12.5V is present at pins A & B. 3. 9.0V is present at pin J with respect to ground plane. 4. Perform d.c. checks as given in Tables 1 & 2.
Current increase above limit of 1.75A.	Continue tests as under.

Lift wire connected at pin J. In this condition (Q10 to Q13 and Q2 are now out of circuit) for the increased current drain in transmit proceed thus:-

Current increase below 1A	A fault exists in the circuitry associated with Q10 to Q13 and Q2. Reconnect lead to pin J and compare voltage measurements with those given in Table 2 &3 to determine faulty component.

Current increase exceeds 1A	Continue tests as under.

Replace links LK1, 2 and 3. For the increase current drain in transmit, proceed thus

Current increase above 1A	Look for Q8 or Q13 collector to heat sink short and unservicable Q12 or Q13.
Current increase below 1A	Fault lies either in the output stage or in the bias supply from Q7 and Q8. Continue with tests as below.

Set R22 fully counter clockwise and measure voltage across R24.

R22 Voltage	
Above 1V	Bias Supply at Fault: Check Q7, Q8 and associated components.
Below 1V	Bias Supply eliminated as fault: Check output stage Q16, D8, C35 Q17, D9, C36

Where an output transistor Q16 or Q17 is proved defective the output transformer T3 should also be checked for shorted turns or tapes by measuring the inductance of the secondary with a 1kHz bridge. If the inductance is less than 100uH with Q of approximately 5 the transformer turns are shorted.

Following any rectification action potentiometer R22 is to be reset as given in the PA 3019 alignment procedures.

3. A.C. Checks

Most faults, resulting in low or distorted output, will disturb the d.c conditions the evidence of which will have been seen in performing the previous d.c checks.

To eliminate the exciter and aerial(or aerial tuning unit), the power amplifier output performance is checked with an input from a signal generator and a 50ohm r.f. dummy load connected across the output. Proceed thus:

Disconnect the co-axial lead from board pins D (core) and C (braid) and to these pins, using as short as possible co-axial lead, connect the 50 ohm r.f dummy load.

Disconnect the co-axial lead from board pins G (core) and H (braid) to these pins connect the r.f. signal generator.

Set the generator to a frequency within the 2 to 10MHz range with 100% amplitude modulation. Using an oscilloscope with 10:1 probe adjust generator output for a level of 5V p-p.

Set the power supply current limit to 6A. Switch transceiver ON, then to TRANSMIT.

Using an oscilloscope observe output across board pins D & C. A symmetrical output waveform should be seen having, for a 12.5V d.c. supply voltage, a p-p voltage of 90 - 110V.

Where the output is not of this order a systematic check for a.c. voltages within the amplifier, with reference to Table 1, should reveal the faulty area and component.

As an additional guide, likely causes of incorrect output are given in Table 3.

TABLE 1

TYPICAL VOLTAGES MEASURED WITH RESPECT TO -ve RAIL

TEST POINT	NO DRIVE D.C. VOLTAGE (V)	DRIVEN TO FULL POWER	
		A.C. VOLTAGE (V)	D.C. VOLTAGE (V)
Pin A	12.5	-	12.5
Pin G (input)	0	5 p-p	0
Pin J	9	-	9
Q10, Q11 emitters	3.3	<0.5 p-p	3.3
Q10, Q11 collectors	7.5	<0.5 p-p	7.5
C16 +be terminal	11.5	-	11.5
Q13 emitter	4.0	3.0	4.0
Q12 base	0.65	-	0.65
Q14, Q15 bases	0.60	4.3	0.60
Q14, Q15 emitters	<0.1	2.5	0.7
Q14, Q15 collectors	12.5	5 p-p	12.5
Q16, Q17 collectors	0	17 p-p	0
Pin D (output)	-	110 p-p	-
D2 ANODE: Heatsink cool	0.5	17 p-p	0.5
Heatsink hot	4.0	8 p-p	4.0
Q9 emitter	0	+5 peak D.C *	3.5
Pin F	10	-	10
D3, D4 cathode	0	+7.5 peak D.C *	3.5
Q5 emitter	3.8	+4.6 peak D.C *	4.0
Q5 base	0.2	+5.2 peak D.C *	2
Q8 collector	3.5	-	3.8

* These voltages comprise both a.c. and d.c. components, the required value being the peak (a.c. + d.c.) voltage with respect to earth.

TABLE 2

TYPICAL VOLTAGES MEASURED WITH RESPECT TO +ve RAIL

(as measured with 20kΩ/volt multimeter)

TEST POINT	D.C. VOLTAGES
Pin B	-12.5V
C16 +ve terminal	1.0V
Q16, Q17 base	-0.65V
Q7 collector	1.25V
Q2 base	3.0V

TABLE 3

SYMPTOM	PROBABLE CAUSE	ACTION
High Output Waveform-	1. Excessive input drive.	Check that input drive level is 5V p-p.
Peaks Symmetrically Flattened	2. Inoperative A.L.C system.	Disconnect one side of RB1. If output falls, check Q6, D5, T4 and associated components. If output is unchanged check Q3, Q4, Q5 and associated components.
Assymmetric Output Waveform	Half of push pull stage defective.	Compare levels of a.c. voltage at Q14 and Q15 emitters. If levels are equal, check Q16, Q17, Q31, Q32, R64, R69 and T2. If levels are unequal check waveform of input signal then T1, Q14 and Q15.
Low Output	1. Incorrect Load	Check that load at p.a. output is 50 ohm resistive.
	2. A.L.C Inoperative	Disconnect r.f. input signal and measure d.c. voltage at base of both Q10 and Q11. If Q11 base is 20mV or more positive with respect to Q10 base suspect a.l.c sensing components.
	3. Low Gain	If Q11 base is 20mV or more negative with respect to Q10 base, amplifier gain is low. Restore r.f. output and check all a.c. voltages with reference to Table 1.

TESTS ON TWO TONE GENERATOR BOARD TYPE 4186

Ensure equipment power is switched OFF.

NOTE: In the Transceiver TRA 7928 the Two Tone Generator Board 4186 is located in the compartment behind the loudspeaker which will foul board components if removal of the board from the top is attempted. In this application, therefore, the transceiver bottom cover plate must be removed so that the board with fixing screws removed, can be lowered to the extent of the connecting leads. Ensure that no board track is touching the transceiver chassis.

Connect a carbon ½W resistor, of any value between 220K and 2.2M across pins D and G to provide continuous operation of tone oscillator.

Switch the equipment power on and perform d.c. voltage checks as tabulated below.

TEST POINT	VOLTAGE (V)	REMARKS
Q2 col. relative to pin A or D	<0.5V	If >0.5V, Q1 or Q2 faulty.
Q3 col. relative to pin F	<0.5V	If >0.5V, Q3 is suspect.
Q6 col. (pin E) relative to pin D	<0.5V	If >0.5V, Q6 is suspect. Disconnect resistor across pins D and G. After 15 to 30 seconds the voltage across E and D should be that of the supply (12V).
Q4 em. to	6 - 8	Re-connect the resistor across pins D and G.
Q4 em. to pin D	6 - 8	An incorrect voltage here will be due to a fault.
Q5 em. to pin D	6 - 8	Oscillator transistor Q4 (Q5) or an open circuit coil L1 (L2).

TESTS ON AERIAL TUNING UNIT TYPE 3032

With the transceiver switched to the receive state the indicator lamp should be on. If this is not the case check:-

(a) wiring to the indicator lamp (light emitting diode - L.E.D) and the A.T.U. Reflectometer Board.

(b) the d.c. voltage at Reflectometer Board pin C which, with the transceiver in 'receive', should be less than 0.5V.

(c) Q3, R18 and R19 of the Reflectometer Board.

Switch the transceiver off, unsolder the tuning capacitor tag connected to board pin G and, using a suitable length of 50 ohm co-axial cable, provide a 50 ohm dummy load to board pin G and chassis.

Switch the transceiver on, set CLARIFIER-AM control to AM and operate P.T.T switch.
NOTE: If a.m. mode facility is not fitted provide an r.f. output by whistling into the microphone.

Under these conditions the indicator lamp should be lit. If it is not check:-

(d) r.f. power is being delivered by the power amplifier, (output level in a.m. mode is 7W c.w or approximately 50V p-p).

(e) d.c. conditions at the reflectometer board with reference to the table below.

Where the indicator lamp is lit disconnect the dummy load and check that the lamp turns off: If it does not a fault exists at the reflectometer board the components of which should be checked with reference to the voltage table below. Conversely, if the lamp is extinguished when the load is disconnected the A.T.U. tuning capacitors should be checked for shorting of plates and/or the coil for open circuit.

REFLECTOMETER BOARD 4509
TYPICAL VOLTAGES

TEST POINT	D.C. VOLTAGE		SUSPECT COMPONENTS
	NO. R.F. O/P	7W R.F. O/P	
Pin C	12.0V	12.0V	Chassis wiring, relay RL/4
Junction R1, R2 (exposed lead of R1)	3.3V	3.3V	R1, R2, C2
D1 anode	2.75V	< 4V	1. Check dummy load
D2 anode	2.65V	> 6.5V	2. C1, C2, R3, R4, R8, R14, T1
Junction R9,R11,R13 (exposed lead of R9 or R11)	1.6V	3.5V	Q1, Q2
Q3 collector	0V	4V	Q3
Pin E	10.5V	8.5V	Q3

PART 3

SECTION 8

ALIGNMENT PROCEDURES

SECTION 8

ALIGNMENT PROCEDURES

1. GENERAL INSTRUCTIONS

The procedures written in this section should be carried out by competent personnel only and the recommended test equipment, as listed at the beginning of Part 3 of the handbook, should be used whenever possible.

The Racal Test Jig JT 197, plugged into the transceiver A.F. INPUT socket (SKA), provides a convenient means for the connection of an audio generator and to monitor the receiver output. The jig also includes a P.T.T. line switch enabling the transceiver to be held in the transmit state.

If this item is unavailable the input/output connections and linking for P.T.T action at SKA are:-

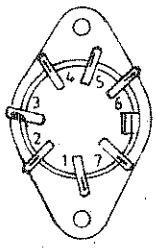

A.F. INPUT - PINS 1 & 2 (EARTH)
A.F. OUTPUT - PINS 6 & 5 (EARTH)
P.T.T. - PINS 3 & 4 (LINKED)

NOTE: Do not connect a microphone for P.T.T. control since the microphone acoustic pick-up will adversly affect alignment.

2 OVEN OSCILLATOR UNITS TYPES 3044 & 3047

Switch equipment power on and allow at least 10 minutes warm-up time before taking oven temperature measurements, and at least half an hour before attempting oscillator frequency adjustments. Remove polyurathane cover from oven.

2.1 Oven Temperature Adjustments

The oven temperature control potentiometer is factory pre-set and adjustment should be necessary only where components in the oven control circuit have been replaced.

With reference to Oven Oscillator Layout Diagram (ABA3047 or ABA3044 as appropriate) and using the Electronic Temperature Probe (Dependotherm MRC3) monitor the oven temperature.

Type 3047 - Probe in contact with top face of oven casting at the point above heating transistor Q4.

Type 3044 - Probe in contact with top face of oven casting at the point above heating transistor Q8.

Using a pair of long nose pliers adjust R27 (3047) R29 (3044) for a stable oven temperature of 70°C ±0.5°C.

The position of the R27 (R29) prevents adjustment by a screwdriver unless the board is removed from the equipment chassis. About 1 minute should be allowed after each adjustment for stabilization of temperature. When the potentiometer has been finally adjusted re-seal the setting with sealing varnish.

2.2 Channel Oscillator Adjustment

Where the equipment is used in two frequency simplex operation connect the Test Jig JT 197 (Test Jig set to RX initially) to the microphone socket, to select the channel frequencies in the transmit state. Connect the frequency counter board pins:-

N and M (earth) - Board 3047

R and S (earth) - Board 3044

Trim the output frequencies, selected by the equipment CHANNEL switches, to within ±2MHz of the crystal nominal frequencies (indicated at the top of crystal can) by adjusting the trimmer capacitors as shown in the following table,

OVEN TYPE	MODE	EQPT. STATE	TRIMMER CAPACITOR FOR CHANNEL											
			1	2	3	4	5	6	7	8	9	10	11	12
3047	6 ch. s.f.s.	RX	14	16	18	21	23	25						
3044	12 ch. s.f.s.	RX	9	16	22	28	34	41	12	18	24	31	37	43
3044	6 ch. 2.f.s.	RX	9	16	22	28	34	41						
		TX JT197 TO TX)	12	18	24	31	37	43						

2.3 Carrier Insertion Oscillator

If the unit is used to provide clarifier facility in transmission, e.g. Transceiver TRA 7928B, link oven unit board pins -

F and G - 3047

D and E - 3044

Connect the counter to board pins -

D and E (earth) - 3047

G and F (earth) - 3044

Connect the Test Jig (Racal JT197) to the microphone socket and with the equipment switched to transmit adjust:

C36 (3047)
C58 (3044)

for a counter reading of 10700000Hz ±2Hz.

Return the equipment to the receive state and, where fitted, remove link

F and G - 3047

D and E - 3044

Adjust L4 - 3047
L2 - 3044

so that the equipment CLARIFIER control varies the frequency equally about 10,700000Hz.

Disconnect the test equipment and replace oven covers.

3 EXCITER RECEIVER BOARD TYPE 3028

3.1 Exciter

3.1.1 *Preliminary*

The alignment of this board necessitates transmitting into a 50 ohm resistive load i.e. Racal Test Jig JT162 or R.F. Power Meter e.g. Marconi type TF152A/1. If the transceiver is fitted with ATU Type 3032 this must be by-passed as follows:-

A.T.U. Type 3032

Link input to output where inner conductors of co-axial leads are connected to the tuning capacitors.

Set the tuning capacitors to fully unmeshed state by the AERIAL control

3.1.2 *Initial Transmitter Alignment*

(a) Connect the Test Jig JT197 to the transceiver microphone socket and the two tone a.f. generator to the JT197 A.F. INPUT.

(b) Set the generator to deliver 1.0kHz and 1.6kHz signals at -40dBm into 600 ohms. Ensure CLARIFIER control is not in TUNE/AM position.

(c) Set the JT197 RX/TX switch to TX and switch the transceiver on.

(d) Connect the oscilloscope probe to TP1 of exciter/receiver board plane (not transceiver chassis) and check that the two tone level is 120 to 250mV p-p.

(e) Transfer the oscilloscope probe to TP2 and adjust C33 for maximum output which, on the oscilloscope, should appear as 1.8 to 3.0V of four tone i.f.

(f) Remove a.f. input and adjust R33 for minimum output.

(g) Transfer oscilloscope probe to TP3 and re-adjust C33 for maximum output.

3.1.3 *Sideband Filter Adjustment*

(a) For selectable sideband versions, select the required sideband by the transceiver U.S.B/L.S.B pushbutton (in for LSB; out for USB).

(b) Set the a.f. generator for single tone of 1kHz at -40dBm

Adjust capacitors

C42 and C43 for U.S.B.

C38 and C39 for L.S.B. (if fitted)

for maximum output, typically 0.5Vp-p.

3.1.4 *A.M. Filter Alignment (where A.M. facility provided)*

(a) Switch transceiver off.

(b) Carefully connect a short link wire between TP7 (or pin 2 of ML8) and board pin M. (This action allows both sidebands at the intermediate frequency to be channelled through the a.m. filter.

(c) Switch the transceiver on. A two tone envelope should be seen on the oscilloscope connected to TP3.

(d) Adjust 3C38 and 3C39 so that, when the a.f. is varied from 300 to 3000Hz there is:- minimum variation in amplitude
minimum amplitude in crossover

(e) Switch transceiver off and carefully disconnect the link inserted at (b). Switch transceiver on again to prevent undue cooling of crystal oven.

3.1.5 *Post Filter Alignment*

(a) Set a.f. generator for two tone output of 1.0 and 1.6kHz at a level of -40dBm.

(b) Transfer oscilloscope probe from TP3 to board pin P.

(c) Select the channel of lowest frequency; a two tone waveform should be seen on the oscilloscope, possibly with 'noisy' content.

(d) Adjust L7 and C56 for maximum output.

(e) Adjust R86 and R87 to reduce 'noise' to minimum.

(f) Adjust R67 for a 5V p-p output.

(g) Remove a.f. input and sufficiently increase sensitivity of the oscilloscope to observe remaining signal.

(h) Minimise this signal by adjustment of R86.

(j) Return a.f. input.

(k) Check the output on all other channels and, for the highest output channels, adjust R67 for 5.5V p-p output.

(l) Connect the 50 ohm resistive load (JT162 or r.f power meter) to the transceiver AERIAL socket and monitor the output voltage by the oscilloscope.

(m) Select the channel of highest frequency and remove any remaining noise by adjustment of C23 of Power Amplifier Board and R87 of the exciter/receiver board.

3.1.6 *Carrier Re-Insertion Alignment (Where AM facility provided)*

(a) Set CLARIFIER to A.M position. A three tone waveform should be seen on the oscilloscope.

(b) Remove the 1.6kHz a.f. input.

(c) Adjust R132 to equalise the amplitudes of the two remaining waveforms (zero crossover).

(d) Readjust R132, clockwise, until carrier is 90% modulated (amplitude at crossover is 10% of p-p amplitude).

3.2 Receiver

3.2.1 *Initial Settings*

(a) Remove the a.f. generator from the test jig JT197 A.F. INPUT and connect the oscilloscope probe to jig A.F. OUTPUT.

(b) Set the jig RX/TX switch to RX.

(c) Remove the 50 ohm load from transceiver AERIAL socket and connect the r.f. generator to this socket.

(d) Adjust VOLUME control for comfortable noise output level.

(e) Set R114 three quarters clockwise.

3.2.2 *Receiver not fitted with A.M. Facility*

(a) Select any channel and adjust r.f. generator for an output level of 200uV e.m.f and tune for an oscilloscope display of a.f. output.

(b) With the generator correctly tuned, increase the level to 400mV e.m.f. The 1kHz a.f. output should be 1.4 to 2.2V p-p.

(c) Slowly adjust R114 in a counter clockwise direction until output shows signs of oscillation. Re-adjust R114 clockwise by approximately 10 degrees.

3.2.3 *Receivers fitted with A.M. Facility*

(a) Switch transceiver to A.M. mode.

(b) Adjust r.f. generator for an output of 2uV e.m.f. with an 80% 1kHz modulation. Tune generator until an a.f. output is seen on oscilloscope.

(c) Adjust 2L13 for maximum a.f. output.

(d) Increase the r.f. generator output to 200mV e.m.f and reduce modulation depth until the a.f. output beings to fall.

(e) Slowly adjust R114 counter clockwise until a.f. output again beings to fall and at this point re-set R114 approx. 10 degrees clockwise.

3.2.4 *I.F. Rejection*

(a) Ensure transceiver is not switched to AM and select channel nearest to 6MHz.

(b) Adjust r.f. generator output to 40dB above 2uV e.m.f and tune about 10.7MHz to establish an a.f. output, if necessary, further increasing r.f. input.

(c) Adjust L6 and R39 to nullify output.

(d) Continue increasing r.f. input and nullifying by L6 and R39 adjustment until no further reduction is possible. The generator output should be greater than 2mV e.m.f. to observe a noisy a.f. output.

(e) The exciter receiver board is now fully aligned; switch transceiver off, remove test equipment and restore original connections at the a.t.u.

4. POWER AMPLIFIER TYPE 3019

NOTE: The alignment procedure for i.f. rejection is covered by the instructions previously given for the exciter alignment.

Output Stage Bias Adjustment

(a) Ensure transceiver is switched off.

(b) Connect the Test Jig JT197 to microphone socket. Set RX/TX switch to RX.

(c) At the Power Amplifier board disconnect the core of the co-axial cable from pin G.

(d) Remove links LK1, LK2 and LK3 and, at any one of these link positions, connect a multimeter with the positive lead at the transformer side of the link. Set the meter to read 10mA f.s.d.

(e) Set R22 fully counter clockwise.

(f) Switch transceiver on and the jig RX/TX switch to TX.

(g) Adjust R22 until current measured on meter is between 7 & 8 mA.

(h) Switch transceiver off, reconnect links and co-axial cable.

5. AERIAL TUNING UNIT TYPE 3032

For the alignment of this unit it is necessary only to establish the law between the tuning components and is of a mechanical nature. Proceed as follows:-

At the transceiver front panel turn the AERIAL control fully clockwise.

Check the tuned position of capacitor 1C6 (located furthermost from coil 1L1) the plates of which should be fully unmeshed. If otherwise, loosen the grub screw of the gear attached to the control shaft (using a suitable Allen Key) and, ensuring AERIAL control is in the fully clockwise position, set the capacitor for minimum mesh.

6. TWO TONE GENERATOR BOARD TYPE 4186

Ensure equipment power is switched off.

NOTE: *In the Transceiver TRA 7928 the Two Tone Generator Board 4186 is located in the compartment behind the loudspeaker which will foul board components if removal of the board from the top is attempted. In this application, therefore, the transceiver bottom cover plate must be removed so that the board with fixing screws removed, can be lowered to the extent of the connecting leads. Ensure that no board track is touching the transceiver chassis.*

Remove the board such that the inductors are accessible for tuning. Connect a frequency counter (input impedance greater than 100 Kilohm) across D1 (earth to cathode).

Connect a resistor (220K to 2.2M) between terminals D and G to give continuous operation of Tone oscillators.

Disconnect transmitter output to AERIAL terminal and switch equipment on.

Identify L1 and adjust for a counter reading of 800Hz ±1Hz.
Transfer the counter connections across D3 (earth to cathode) and adjust L2 for a counter reading of 1240Hz ±1Hz.

Switch the equipment power off and remove the counter.
Remove the resistor across board pins G and D and return the board to the equipment.

Re-connect the transmitter output to the AERIAL terminal.

PART 3

SECTION 9

DIAGRAMS & PARTS LISTS

DRAWING NUMBER	TITLE
ABH 3000	TRANSCEIVER TRA 7928 BLOCK DIAGRAM
-	OVEN OSCILLATOR TYPE 3044 PARTS LIST
* ABA 3044	OVEN OSCILLATOR TYPE 3044 BOARD LAYOUT
* ACC 3047A/B	OVEN OSCILLATOR TYPE 3044 CIRCUIT DIAGRAM
-	OVEN OSCILLATOR TYPE 3047 PARTS LIST
* ABA 3047	OVEN OSCILLATOR TYPE 3047 BOARD LAYOUT
* ACC 3047	OVEN OSCILLATOR TYPE 3047 CIRCUIT DIAGRAM
-	EXCITER/RECEIVER TYPE 3028 PARTS LIST
-	FILTER KIT TYPE 3033A PARTS LIST
-	FILTER KIT TYPE 3033B PARTS LIST
ACH 3028	EXCITER/RECEIVER TYPE 3028 BOARD LAYOUT
ADC 3028A/B/C	EXCITER/RECEIVER TYPE 3028 CIRCUIT DIAGRAM
-	POWER AMPLIFIER TYPE 3019 PARTS LIST
ACH 3019	POWER AMPLIFIER TYPE 3019 BOARD LAYOUT
ACC 3019	POWER AMPLIFIER TYPE 3019 CIRCUIT DIAGRAM
-	TWO-TONE GENERATOR TYPE 4186 PARTS LIST
ABC 4186	TWO-TONE GENERATOR TYPE 4186 BOARD LAYOUT & CIR.
	A.T.U. 3032 PARTS LIST
ABC 3032	A.T.U. 3032 LAYOUT & CIRCUIT
-	TRANSCEIVER TRA 7928 CHASSIS PARTS LIST
ACC 3000	TRANSCEIVER TRA 7928 CHASSIS WIRING DIAGRAM

* INCLUDED AS APPROPRIATE.

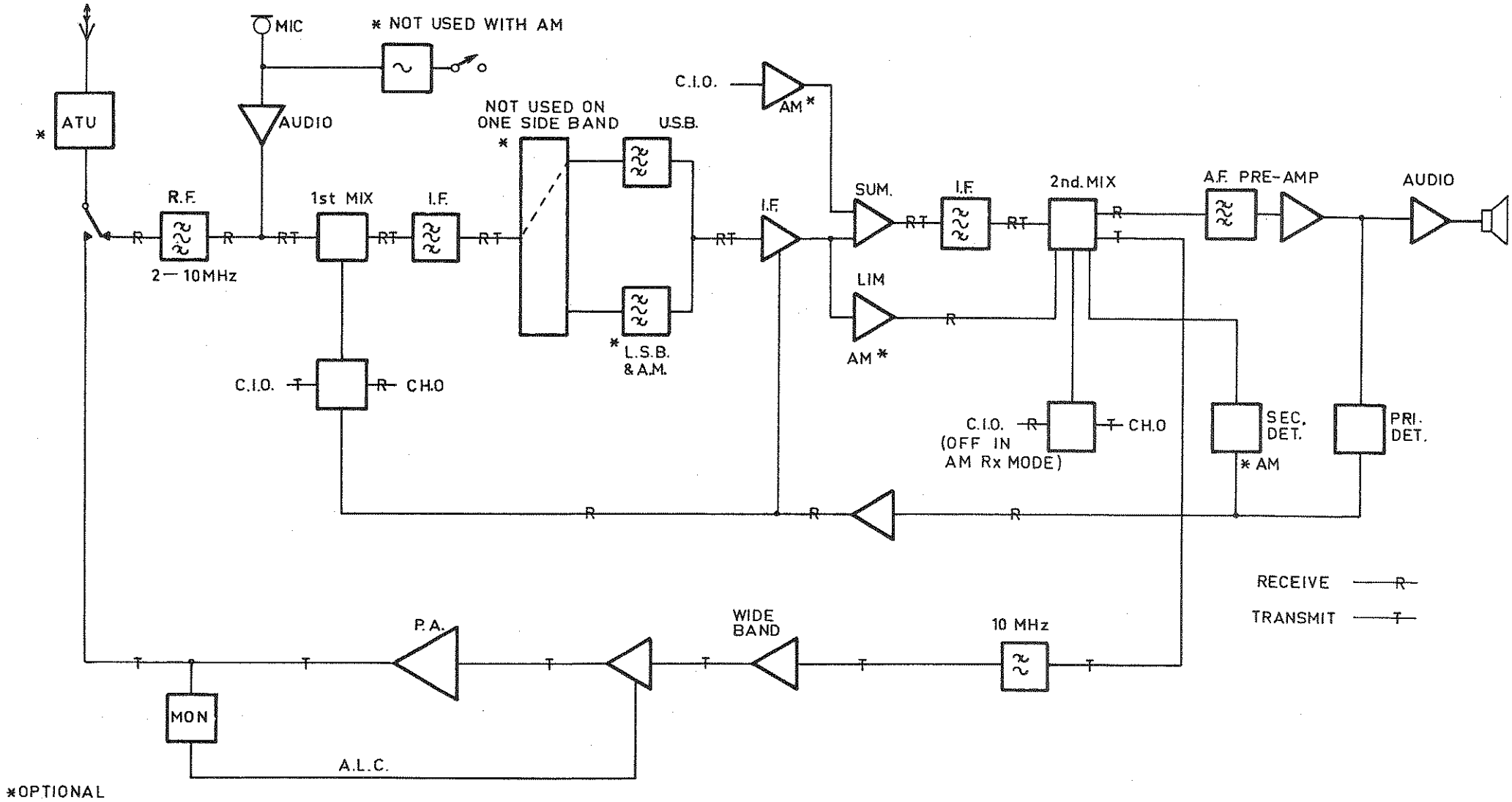

Title
- BLOCK DIAGRAM -
TRANSCEIVER TRA 7928

Drawing No: ABH 3000
Date: 6-10-72

RACAL The Electronics Group

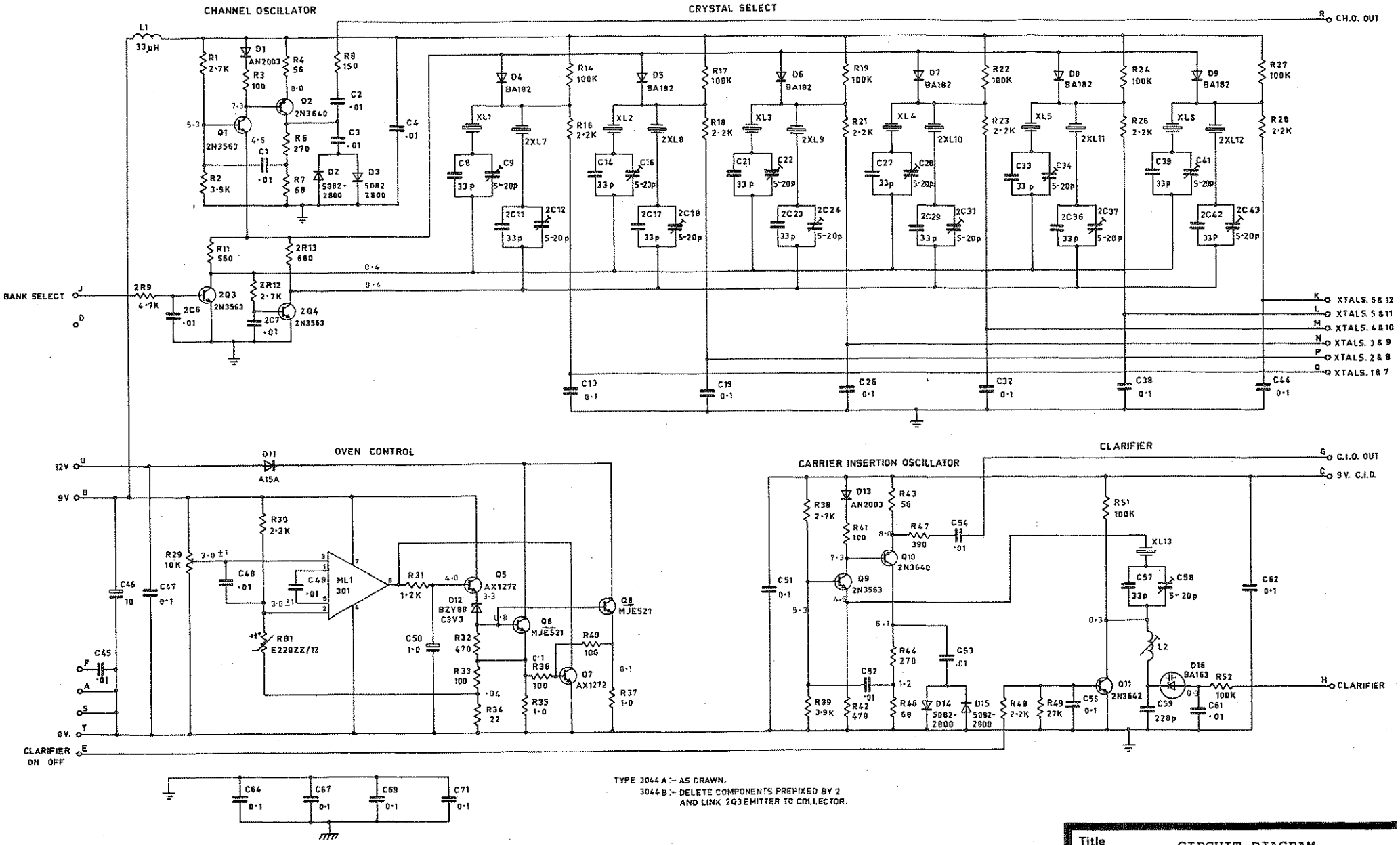

Title

- CIRCUIT DIAGRAM -
OVEN OSCILLATOR UNIT
TYPE 3044

Drawing No: ACC 3044A/B

Date: 20-10-72

RACAL The Electronics Group

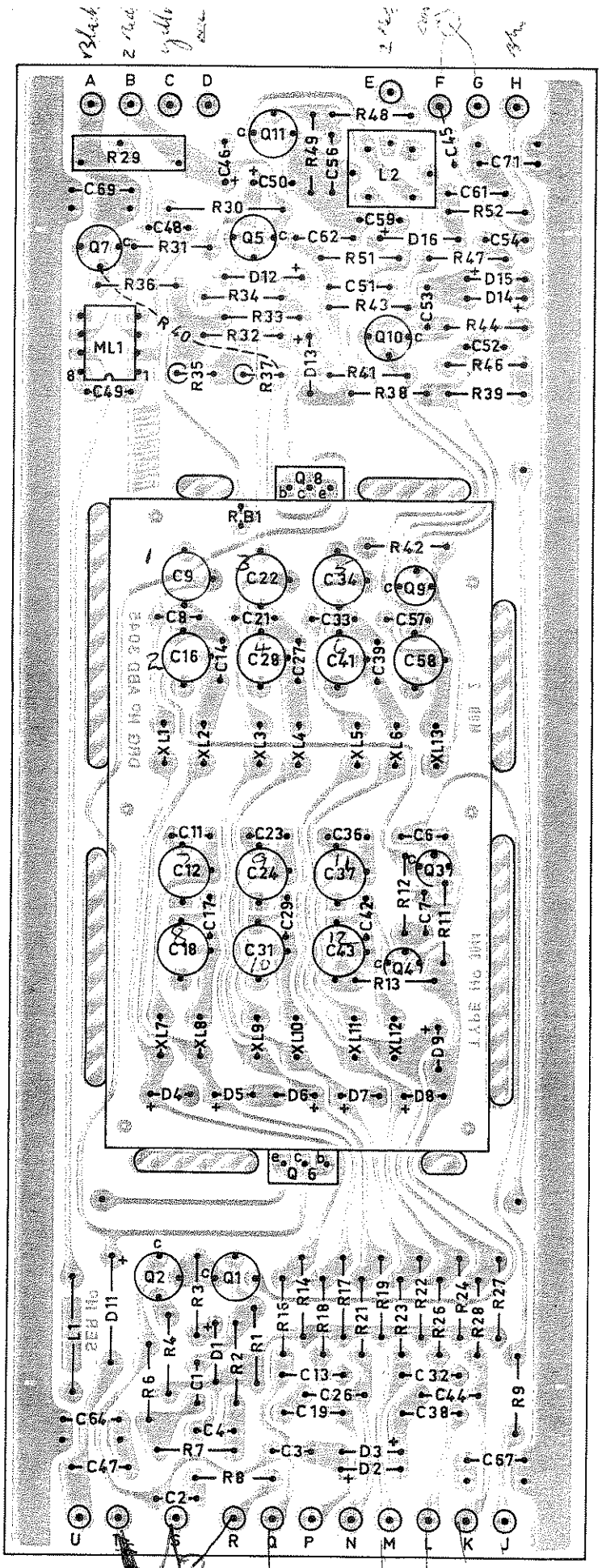

R40 MOUNTED ON UNDERSIDE.

Title

- BOARD LAYOUT -
OVEN OSCILLATOR UNIT
TYPE 3044

Drawing No: ABA 3044A/B

Date: 25-10-72

RACAL
The Electronics Group

COMPONENT	RATE	TOL %	VALUE	MANUFACTURER & TYPE		QTY	CIRCUIT REFERENCE
RESISTOR FIXED							
Metal Glaze	¼W	5	22	IRH	RGQ	1	R34
			56			2	R4, 43
			68			2	R7, 46
			100			5	R3, 33, 36, 40, 41
			150			1	R8
			270			2	R6, 44
			390			1	R47
			470			2	R32, 42
			560			1	R11
			680			1	2R13
			1.2K			1	R31
			2.2K			7	R16, 18, 21, 23, 26, 28, 48
			2.7K			3	R1, 2R12, R38
			3.9K			2	R2, 39
			4.7K			1	2R9
			27K			1	R49
			100K			8	R14, 17, 19, 22, 24, 27, 51,52
Carbon	1W	20	1.0	MORGANITE	AY	2	R35, 37
Metal Oxide	¼W	5	2.2K	CORNING	TR5	1	R30
RESISTOR VARIABLE							
Wirewound			10K	BOURNS	3007P-1-103	1	R29
THERMISTOR				PHILIPS	2322/660/ 91007	1 1	RB1 (PT OVEN SUB ASSEMBLY ABA 4867)
CAPACITORS FIXED							
Ceramic	63V	2	33p	Philips	2222-638-58339	12	C8,2C11,C14,17,21,2C23,27,2C29 C33,2C36,C39,2C42
	63V	2	33p	PHILIPS	2222-638-10399	1	C57
	100V	2	220p	PHILIPS	2222-638-58221	1	C59
	50V	+80-20	0.01	MSK	BM	13	C1,2,3,4,2C6,2C7,C45,48,49 C52, 53,54,61.
Met. Polyester	100V	20	0.1	AEE	PHE 240	14	C13,19,26,32,38,44,47,51,56 C62,64,67,69,71
Tantalum	35V	+50-20	1.0	SIEMENS	B45134	1	C50
	16V	+50-20	10	SIEMENS	B45134	1	C46
CAPACITORS VARIABLE							
Ceramic	160V		4.5-20p	STETTNER	4.5/20N750	13	C9, 2C12,C16,2C18,C22,2C24 C28,2C31,C34,2C37,C41,2C43,C58
TRANSISTORS				FAIRCHILD	2N3563	4	Q1, 2Q3, 2Q4, Q9
					2N3640	2	Q2, Q10
					2N3642	1	Q11
					AX1272	2	Q5, Q7
				MOTOROLA	MJE251	2	Q6,Q8 (PT OVEN SUB ASSEMBLY ABA 4867)
DIODES				FAIRCHILD	AN2003	2	D1, D13
				HEWLETT PACKARD	HP5082-2800	4	D2, D3, D14, D15

Components prefixed by 2 are not used in units supplied for up to 6 channel operation.

OVEN OSCILLATOR UNIT TYPE 3044

COMPONENT	RATE	TOL %	VALUE	MANUFACTURER & TYPE		QTY	CIRCUIT REFERENCES
DIODES CONT.				I.T.T.	BA 163	1	D16
				G.E.	A15A	1	D11
				PHILIPS	BA 182	6	D4, 5, 6, 7, 8, 9,
				PHILIPS	BZY88/C3V3	1	D12
Micro Circuit				FAIRCHILD	uA301	1	ML1
Crystal (C.I.O)			10.7 MHz	RACAL	ARA1037	1	XTL13
Crystal (CH.O)				RACAL	ARA1038	1-12	XTL 1-12
INDUCTOR		10 Tuning	33uH	CAMBION	3640-57-2	1	L1
				RACAL	ACT3037	1	L2

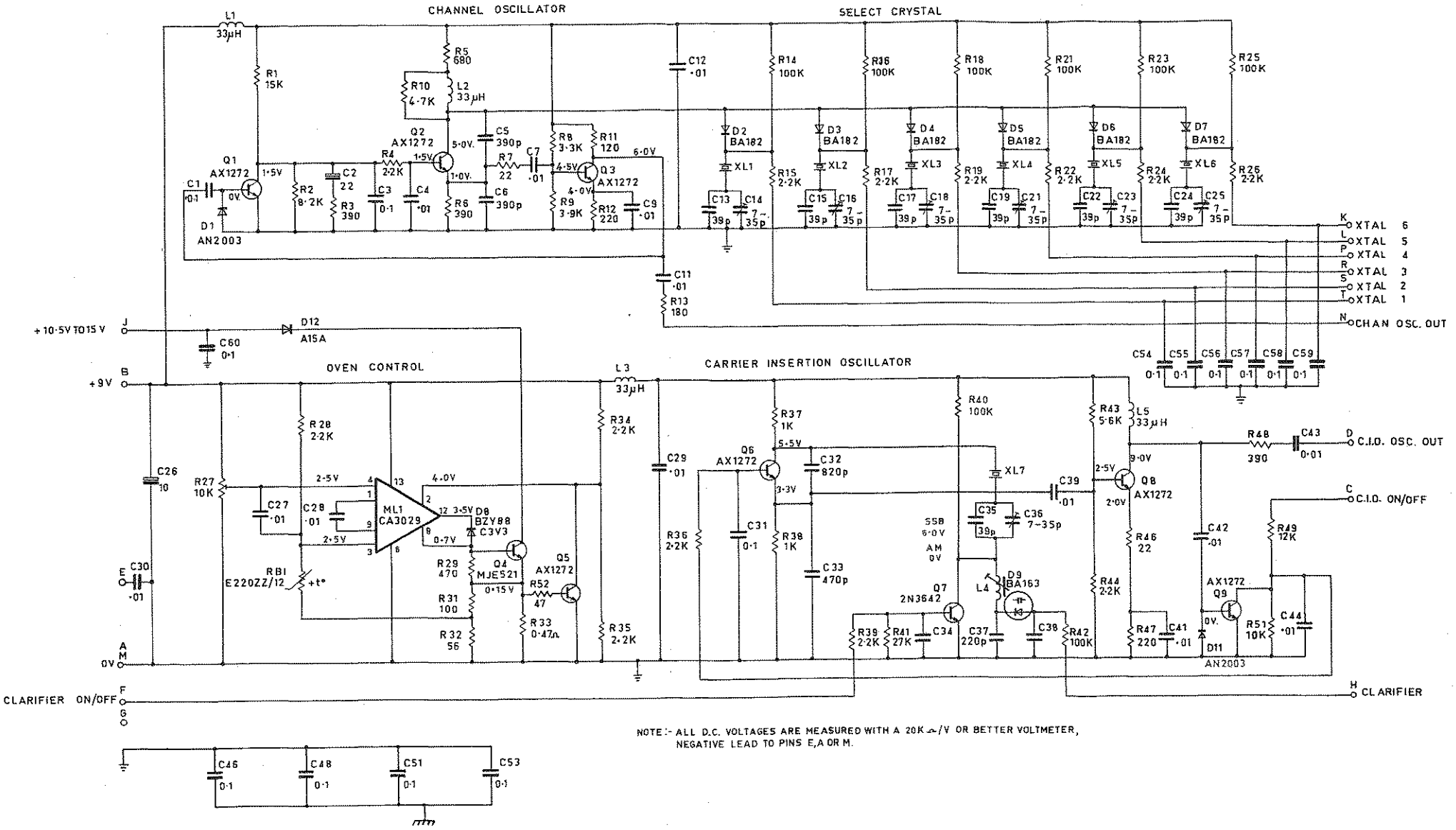

NOTE:- ALL D.C. VOLTAGES ARE MEASURED WITH A 20K Ω/V OR BETTER VOLTMETER, NEGATIVE LEAD TO PINS E,A OR M.

Title - CIRCUIT DIAGRAM - OVEN OSCILLATOR UNIT TYPE 3047

Drawing No: ACC 3047 Date: 18-10-72

RACAL The Electronics Group

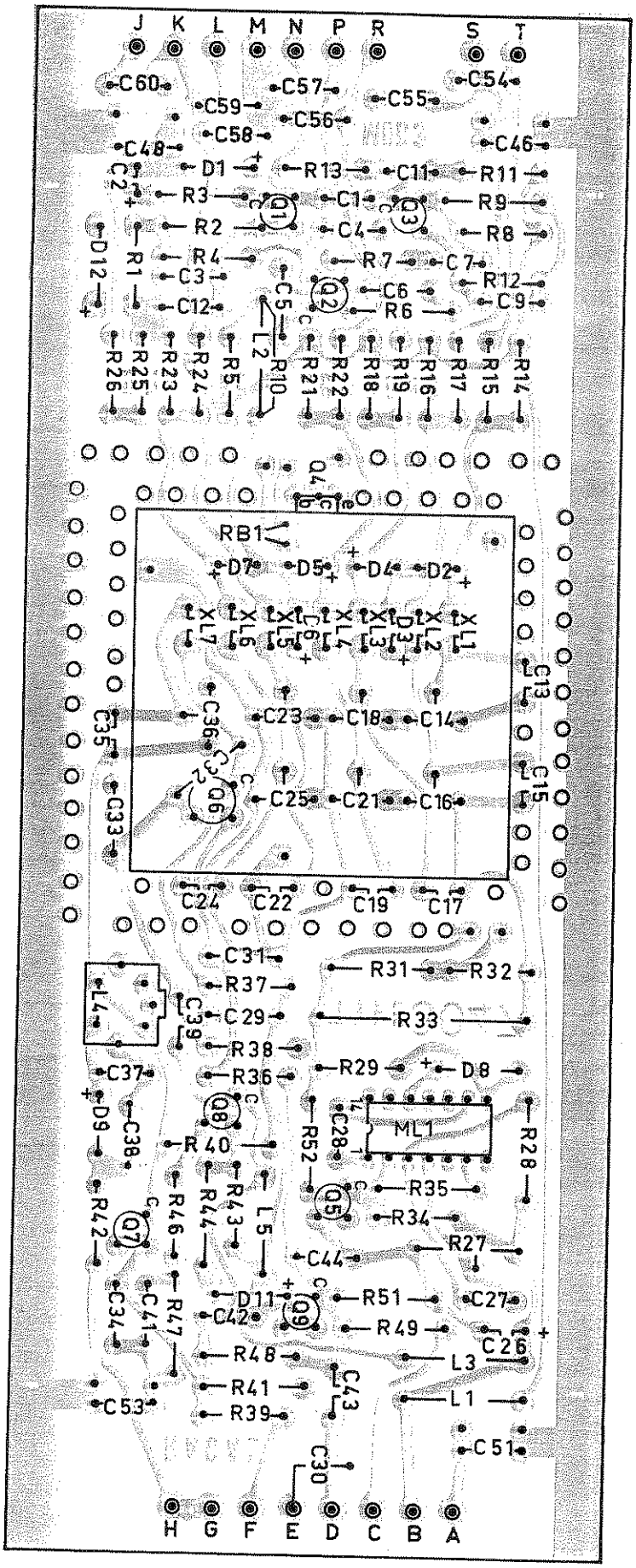

R10 MOUNTED ON UNDERSIDE

Title

- BOARD LAYOUT -
OVEN OSCILLATOR UNIT
TYPE 3047

Drawing No: ABA 3047

Date: 13-10-72

RACAL The Electronics Group

COMPONENT	RATE	TOL %	VALUE	MANUFACTURER & TYPE		QTY	CIRCUIT REFERENCES
RESISTORS FIXED							
Carbon	¼W	5	22	IRH	BTQ	2	R7, 46
			47			1	R52
			56			1	R32
			100			1	R31
			120			1	R11
			180			1	R13
			220			2	R12, 47
			390			3	R3, 6, 48
			470			1	R29
			680			1	R5
			1K			2	R37, 38
			2.2K			12	R4,15,17,19,22,24,26,34,35 R36,39,44
			3.3K			1	R8
			3.9K			1	R9
			5.6K			1	R43
			8.2K			1	R2
			10K			1	R51
			12K			1	R49
			15K			1	R1
			27K			1	R41
			100K			8	R14, 16, 18, 21,23,25,40,42
Metal Oxide	½W	5	2.2K	CORNING	TR5	1	R28
Metal Glaze	¼W	5	4.7K	IRH	RG4	1	R10
Wirewound	5W	5	0.47	IRH	ASW5	1	R33
RESISTOR VARIABLE							
Wirewound			10K	BOURNS	3007P-1-103	1	R27
THERMISTOR				PHILIPS	2322/660/91007	1	RB1
PT OF OVEN ASSEMBLY ABA 4868							
CAPACITORS FIXED							
Ceramic Disc	50V	+80-20	0.01	MSK	BM	17	C1,4,7,9,11,12,27,28,29,30, C34,38,39,41,42,43,44
Ceramic	63V	2	39p	PHILIPS	222263810399	7	C13,15,17,19,22,24,35
			220p		222263852221	1	C37
Mica	100V	5	390p	DUCON	SDM	2	C5, 6
			470p			1	C33
Styroseal	100V	5	820p	DUCON	DFB 122	1	C32
Met. Polyester	100V	20	0.1	AEE	PHE 240	13	C3,31,46,48,51,52,53,55,56, C57,58,59,60
Tantalum	16V	+50-20	10	SIEMENS	B45134	1	C26
	6.3V	+50-20	22			1	C2
CAPACITOR VARIABLE							
Ceramic	160V		7-35p	STETTNER	027/35 N1500	7	C14,16,18,21,23,25,36
Transistor				FAIRCHILD	2N3642	1	Q7
					AX1272	7	Q1,2,3,5,6,8,9
				MOTOROLA	MJE521	1	Q4

OVEN OSCILLATOR UNIT 3047

COMPONENT	RATE	TOL %	VALUE	MANUFACTURER & TYPE		QTY	CIRCUIT REFERENCES
Diode				FAIRCHILD	AN2003	2	D1, 11
				I.T.T	BA163	1	D9
				PHILIPS	BA182	6	D2, 3, 4, 5, 6, 7,
				MULLARD	BZY88/C3V3	1	D8
				G.E.	A15A	1	D12
Int. Circuit				RCA	CA 3029	1	ML1
Crystal			10.7 MHz	RACAL	ARA 1037	1	XL7
Inductor		10	33uH	CAMBION	3640-57-2	4	L1, 2, 3, 5
		Tuning		RACAL	ACT3037	1	L4

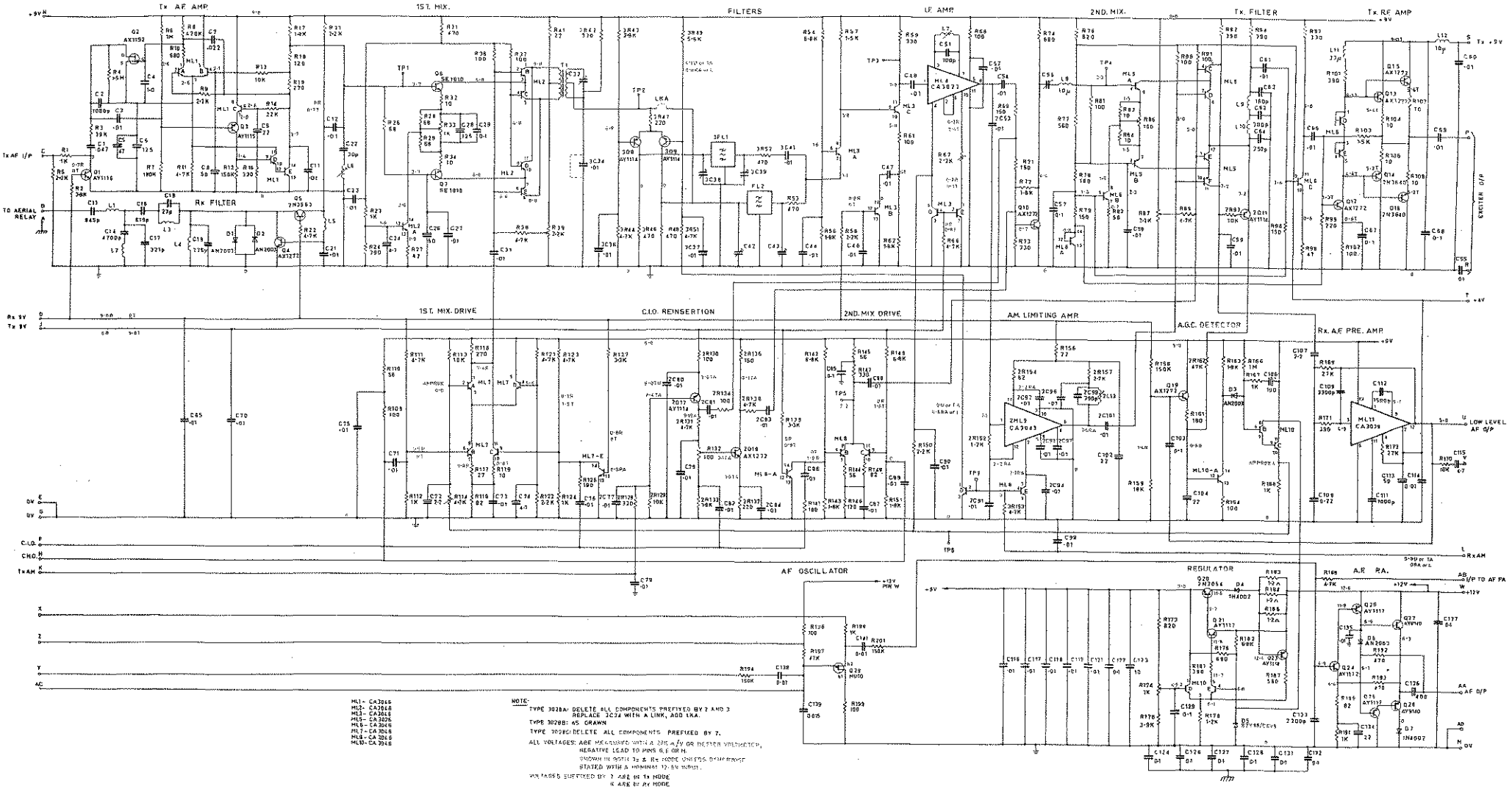

Title

- CIRCUIT DIAGRAM -
EXCITER/RECEIVER UNIT
TYPE 3028

Drawing No: ADC 3028A/B/C

Date: 17-10-72

RACAL The Electronics Group

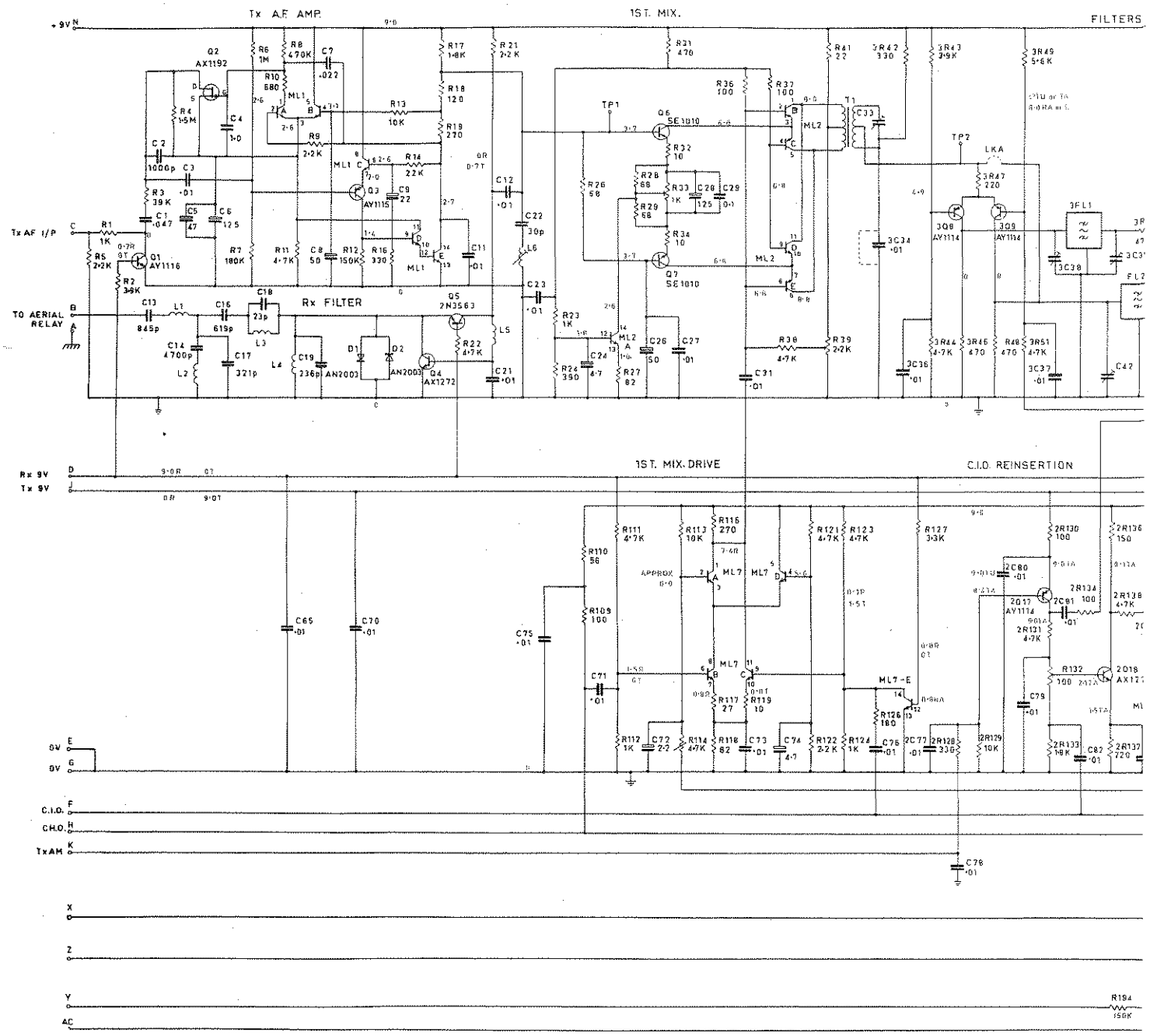

ML1 - CA3046
ML2 - CA3046
ML3 - CA3046
ML5 - CA3026
ML6 - CA3046
ML7 - CA3046
ML8 - CA3046
ML10 - CA3046

NOTE:

TYPE 3028A: DELETE ALL COMPONENTS PREFIXED BY 2 AND 3
REPLACE 3C34 WITH A LINK, ADD LKA.

TYPE 3028B: AS DRAWN

TYPE 3028C: DELETE ALL COMPONENTS PREFIXED BY 2,

ALL VOLTAGES: ARE MEASURED WITH A 20KΩ/V OR BETTER VOLTMETER
NEGATIVE LEAD TO PINS G,E OR M
SHOWN IN BOTH Tx & Rx MODE UNLESS OTHERWISE
STATED WITH A NOMINAL 12·6V INPUT.

VOLTAGES SUFFIXED BY T ARE IN Tx MODE
R ARE IN Rx MODE
U ARE IN USB MODE
A ARE IN AM MODE
L ARE IN LSB MODE

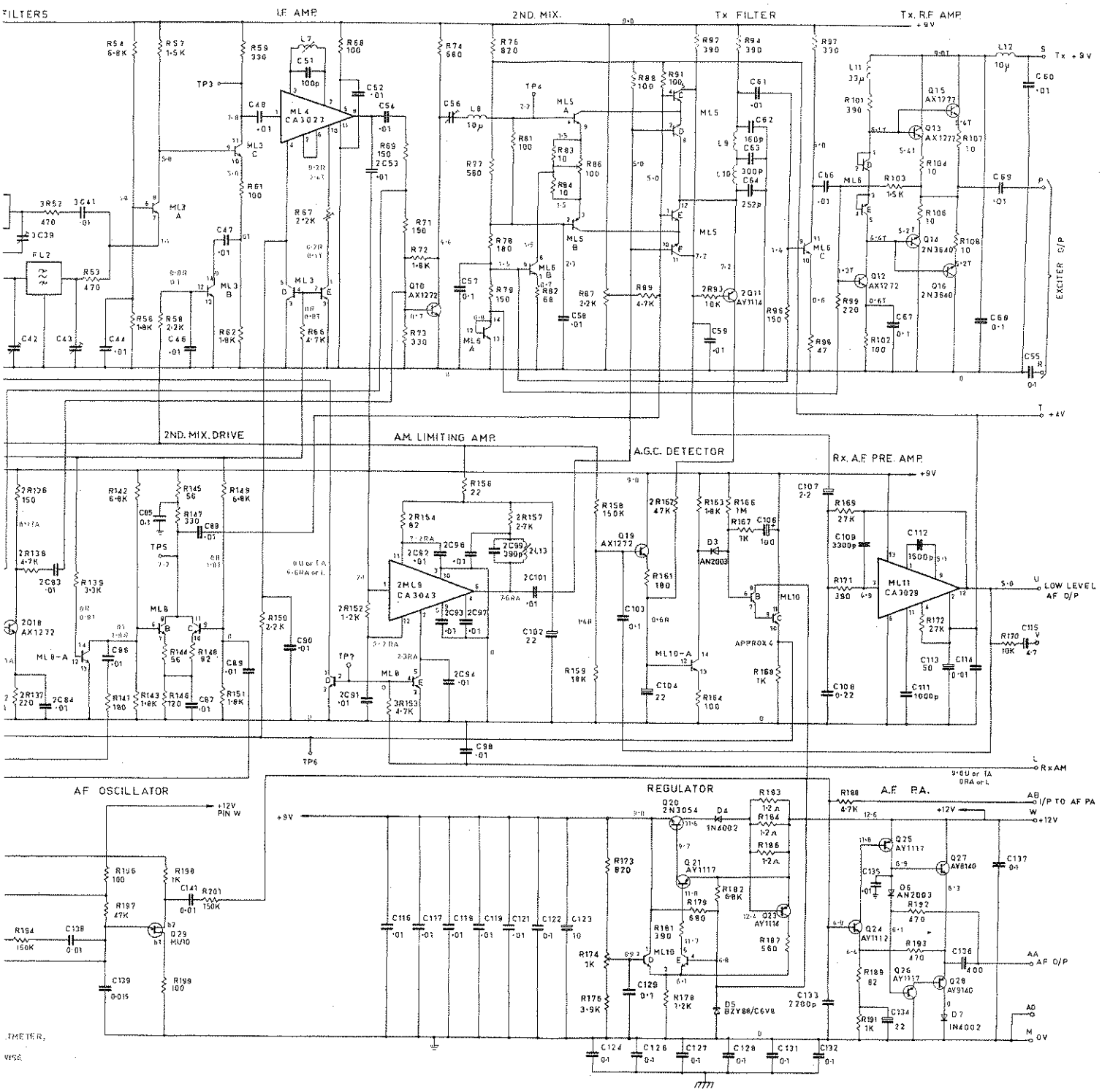

Title

- CIRCUIT DIAGRAM -
EXCITER/RECEIVER UNIT
TYPE 3028

Drawing No: ADC 3028A/B/C

Date: 17-10-72

RACAL The Electronics Group

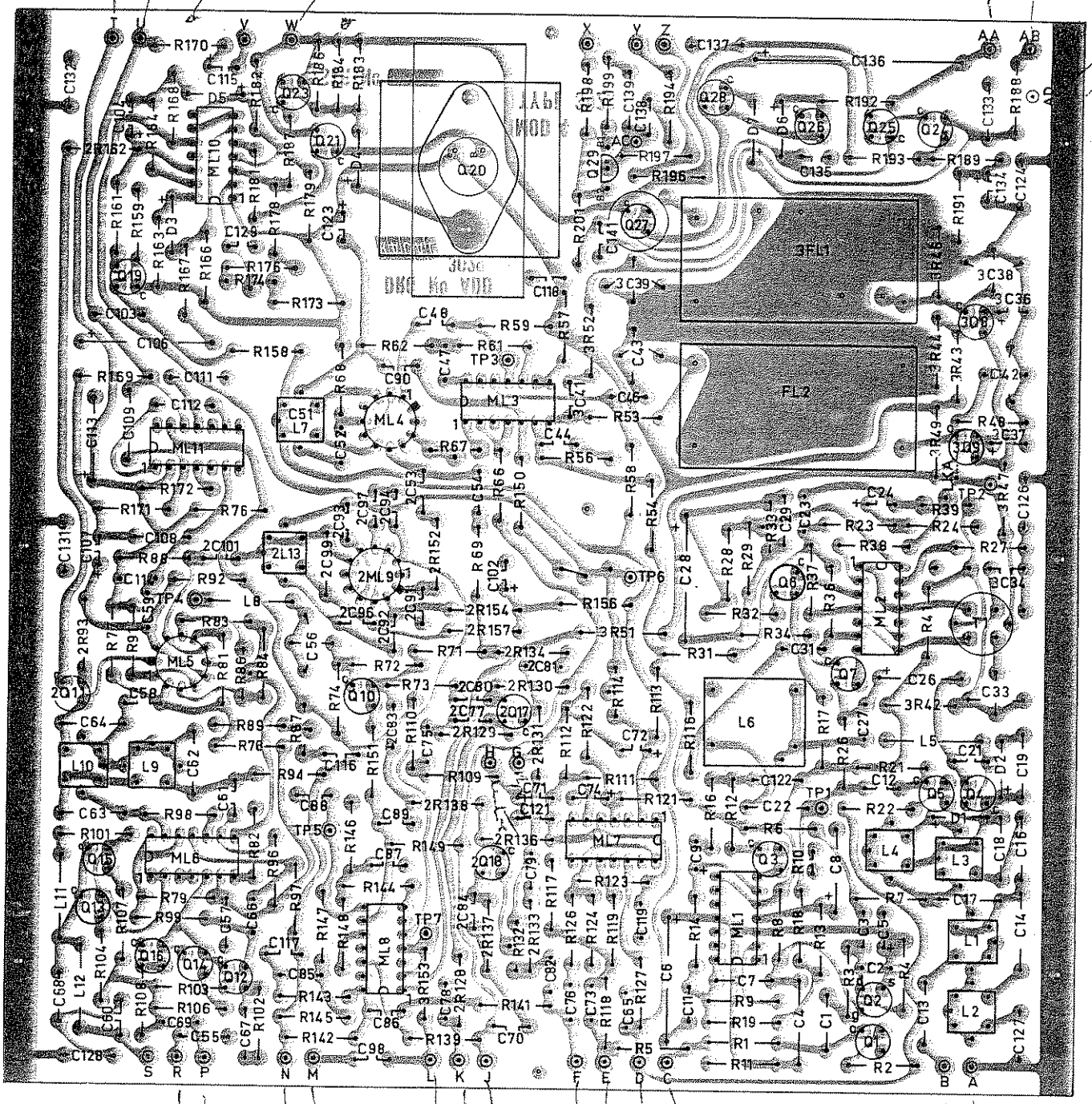

Title

- BOARD LAYOUT
EXCITER/RECEIVER UNIT
TYPE 3028

Drawing No: ACH 3028

Date: 25-10-72

RACAL
The Electronics Group

EXCITER/RECEIVER BOARD TYPE 3028

(EXCLUDES ITEMS REQUIRED FOR A.M. OR SELECTABLE SIDEBAND FACILITIES)

COMPONENT	RATE	TOL %	VALUE	MANUFACTURER/ SUPPLIER	QTY	CIRCUIT REFERENCES
RESISTORS FIXED						
Metal Oxide	½W	5	10	CORNING TR5	4	R32, 34, 83, 84
			47		1	R98
			68		1	R82
			82		1	R27
			100		1	R102
			120		1	R18
			150		4	R69, 71, 79, 96
			180		1	R78
			220		1	R99
			270		1	R19
			330		1	R59
			390		3	R24, 94, 101
			470		1	R31
			560		1	R77
			820		2	R76, 173
			1K		2	R23
			1.5K		2	R57, 103
			1.8K		3	R17, 62, 72
			3.9K		1	R176
			18K		1	R159
			150K		1	R158
			180K		1	R7
			1M		1	R6
Carbon	½W	5	10	IRC BTS	5	R104, 106, 107, 108, 119
			22		2	R41, 156
			27		1	R117
			56		3	R110, 144, 145
			68		3	R26, 28, 29
			82		3	R118, 148, 189
			100		11	R36,37,61,68,81,88,91,109, R164, 196, 199
			120		1	R146
			180		3	R126, 141, 161
			270		1	R116
			330		4	R16, 73, 97, 147
			390		3	R92, 171, 181
			470		4	R48, 53, 192, 193
			560		1	R187
			680		3	R10, 74, 179
			1K		7	R1, 112, 124, 167,168,191,198
			1.2K		1	R178
			1.8K		4	R56, 143, 151, 163
			2.2K		6	R5, 9, 21, 58, 122, 150
			3.3K		2	R127, 139
			3.9K		1	R2
			4.7K		9	R11, 22,38,66,89,111,121,123,188
			6.8K		4	R54, 142, 149, 182
			10K		3	R13, 113, 170
			22K		1	R14

COMPONENT	RATE	TOL %	VALUE	MANUFACTURER & TYPE		QTY	CIRCUIT REFERENCES
Carbon	½W	5	27K	IRC	BTS	2	R169, 172
			39K			1	R3
			47K			1	R197
			150K			3	R12, 194, 201
			470K			1	R8
			1M			1	R166
			1.5M			1	R4
	½W	20	1.2	MORGANITE	AS	3	R183, 184, 186
RESISTORS VARIABLE							
Carbon	½W	20	100	PLESSEY	V10K5	2	R86, 132
			1K			2	R33, 174
			2.2K			3	R39, 67, 87
			4.7K			1	R114
CAPACITORS FIXED							
Disc Ceramic	50V	+100-0	0.01	MSK	BM	43	C11,12,21,23,27,31,44,46,47,48 C52,54,58,59,60,61,65,66,69,71 C73,75,76,78,79,82,85,86,87,88. C89,90,98,114,116,117,118,119, C121,129,135,138,141
Ceramic	500V	10	100p	DUCON	CDS-Y	1	C2
Met. Polyester	250V	20	0.01	AEE	PHE 240	1	C3
	100V	20	0.1			15	C29,55,57,67,68,70,103,122,124 C126,127,128,131,132,137
TANTALUM	35V	+50-20	2.2	SIEMENS	B45134	2	C72, 107
	25V		4.7			3	C24, 74,155
	16V		10			1	C123
	6.3V		22			3	C9, 104, 134
	16V		22			1	C102
	6.3V		47			1	C5
	10V	20	100	UNION CARBIDE	K100J10S	1	C106
ELECTROLYTIC	6.4V	+50-20	50	PHILIPS	C426AR/C50	3	C8, 26, 113
	4V		125		/B125	2	C6, 28
	10V		400		/D400	1	C136
POLYSTYRENE	125V	2	23p	ALLIED	TCS 125	1	C18
	125V		30p	ALLIED	TCS 125	1	C22
	100V		160p	DUCON	DFB SPEC	1	C62
			236p			1	C19
			252p			1	C64
			300p			1	C63
			321p			1	C17
			619p			1	C16
			845p			1	C13
	50V	2	4700p	DUCON	DFB 0528	1	C14
CAPACITORS FIXED POLYCARBONATE	400V	20	1000p	WIMA	FKC	1	C111
			1500p			1	C112
			2200p			1	C133
	400V	2	3300p	WIMA	FCK	1	C109
	400V	20	0.015	WIMA	MKS	1	C139
	250V	20	0.022			1	C7
	250V	20	0.047			1	C1
Met. Lacquer	50V	20	0.22	SHIZUKI	PML224M50	1	C108
	50V	20	1.0	SHIZUKI	PML105M50	1	C4

EXCITER/RECEIVER BOARD TYPE 3028

COMPONENT	RATE	TOL %	VALUE	MANUFACTURER & TYPE		QTY	CIRCUIT REFERENCES
CAPACITORS VARIABLE							
Ceramic	250V	+70-10	10-40p	STETTNER	06 10/40 N750	4	C33, 42, 43, 56
TRANSISTOR				FAIRCHILD	AY1112	1	Q24
					AY1114	1	Q23
					AY1115	1	Q3
					AY1116	1	Q1
					AY1117	3	Q21, 25, 26
					AY9140	1	Q28
					AX1192	1	Q2
					AX1272	6	Q4, 10, 12, 13, 15, 19
					2N3054	1	Q20
					2N3563	1	Q5
					2N3640	2	Q14, 16
					SE1010	2	Q6, 7
					AY8140	1	Q27
				MOTOROLA	MU10	1	Q29
DIODE				FAIRCHILD	AN2003	4	D1, 2, 3, 6
	6.8V			STC	1N4002	2	D4, 7
Zener	400mW			MULLARD	BZY88/C6V8	1	D5
INDUCTOR				RACAL	ACT2744	1	L7
					ABT2824	1	L6
					ACT3069	1	L9
					ACT3061	1	L1
					3062	1	L2
					3063	1	L3
					3064	1	L4
					3065	1	L10
		10	10uH	CAMBION	3640-45-2	2	L8, 12
		10	33uH		3640-57-2	1	L11
			100uH	AEGIS	VPC100	1	L5
TRANSFORMER				RACAL	ABT2748	1	T1
MICROCIRCUIT				RCA	CA3023	1	ML4
					CA3026	1	ML5
					CA3029	1	ML11
					CA3046	7	ML1, 2, 3, 6, 7, 8, 10
FILTER (USB)			10.7MHz	RACAL	AAS2408	1	FL2
* FILTER KIT (AM OPTION)					ABA3033A	1	3FL1
* FILTER KIT (SEL. SIDEBAND OPTION					ABA3033B	1	3FL1

* SEE SEPARATE PARTS LIST

FILTER KIT ABA 3033A

(FITTED TO EXCITER/RECEIVER BOARD 3028 WHEN A.M. FACILITY PROVIDED)

COMPONENT	RATE	TOL %	VALUE	MANUFACTURER & TYPE		QTY	CIRCUIT REFERENCES
RESISTORS FIXED							
Metal Oxide	½W	5	100	CORNING	TR5	1	2R134
			150			1	2R136
			220			1	2R137
			4.7K			1	2R138
Carbon	½W	5	82	IRH	BTS	1	2R154
			100			1	2R130
			220			1	3R47
			330			2	3R42, 2R128
			470			2	3R46, 3R52
			1.2K			1	2R152
			1.8K			1	2R133
			2.7K			1	2R157
			3.9K			1	3R43
			4.7K			4	3R44, 3R51, 2R131, 3R153
			5.6K			1	3R49
			10K			2	2R93, 2R129
			47K			1	2R162
CAPACITORS FIXED							
Disc Ceramic	50V	+100-0	0.01	MSK	BM	17	3C34,3C36,3C37,3C41,2C53 2C77,2C80,2C81,2C83,2C84,2C91 2C92,2C93,2C94,2C96,2C97,2C101
Polystyrene	100V	5	390p	DUCON	DFB114	1	2C99
CAPACITORS VARIABLE							
Ceramic	250V	+70-10	10-40p	STETTNER	D6 10/40 N750	2	3C38, 3C39
TRANSISTORS				FAIRCHILD	AX1272	1	2Q18
					AY1114	4	3Q8, 3Q9, 2Q11, 2Q17
INDUCTOR					ACT 2827	1	2L13
MICRO CIRCUIT				RCA	CA 3043	1	2ML9
FILTER AM			10.7MHz	RACAL	AAS 2406	1	3FL1

FILTER KIT ABA 3033B

(FITTED TO EXCITER/RECEIVER BOARD 3028 WHEN SELECTABLE SIDEBAND FACILITY PROVIDED)

COMPONENT	RATE	TOL %	VALUE	MANUFACTURER & TYPE		QTY	CIRCUIT REFERENCE
RESISTORS FIXED							
Carbon	½W	5	220	IRH	BTS	1	3R47
			330			1	3R42
			470			2	3R46, 3R52
			3.9K			1	3R43
			4.7K			3	3R44, 3R51, 3R53
			5.6K			1	3R49
CAPACITORS FIXED							
Disc Ceramic	50V	+100-0	0.01	MSK	BM	4	3C34, 3C36, 3C37, 3C41
CAPACITORS VARIABLE							
Ceramic	250V	+70-10	10-40P	STETTNER D6	10/40 N750	2	3C38, 3C39
TRANSISTORS				FAIRCHILD	AY 1114	2	3Q8, 3Q9
FILTER (LSB)			10.7 MHz	RACAL	AAS 2409	1	3FL1

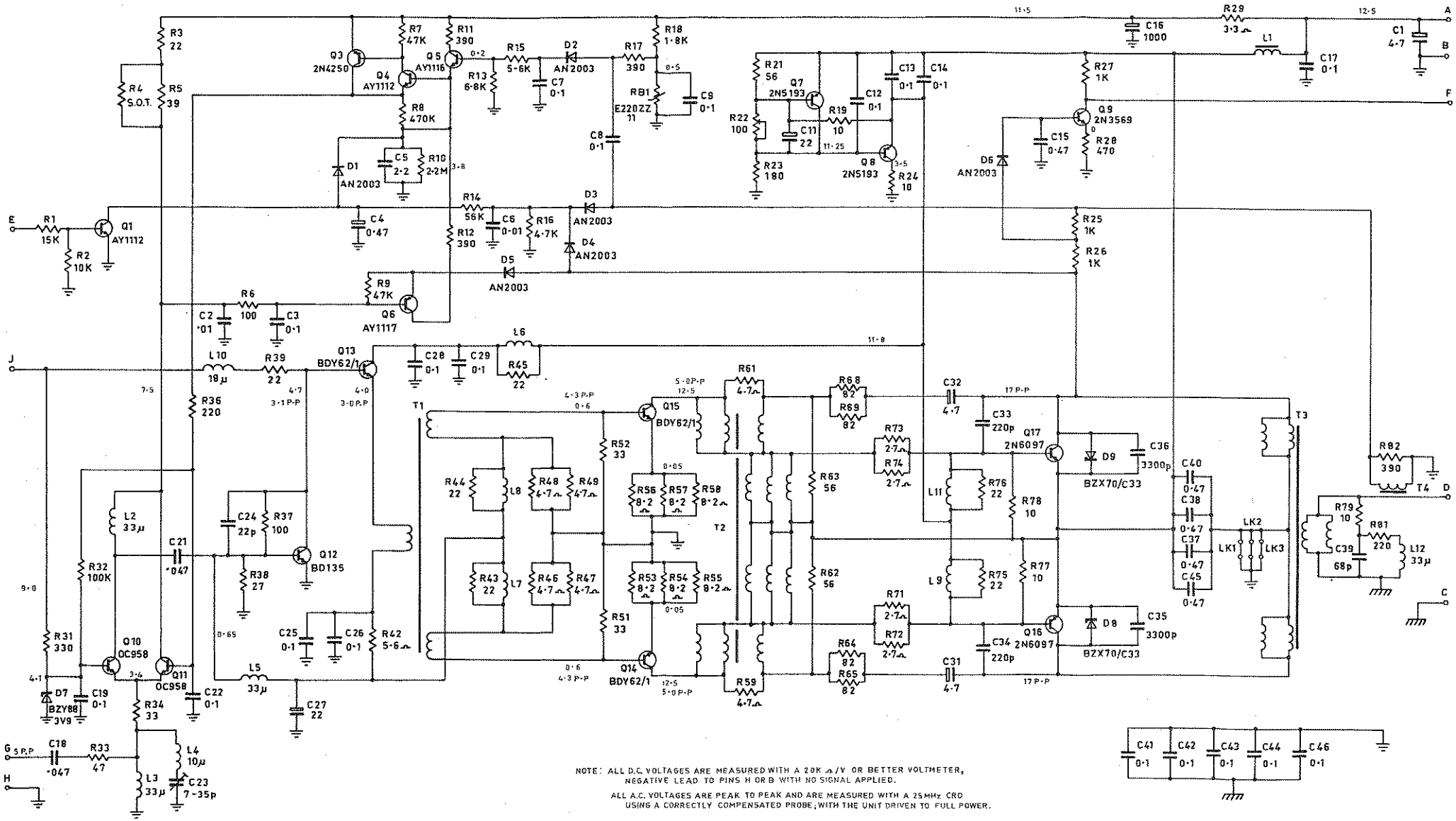

NOTE: ALL D.C. VOLTAGES ARE MEASURED WITH A 20K Ω/V OR BETTER VOLTMETER, NEGATIVE LEAD TO PINS H OR B WITH NO SIGNAL APPLIED.

ALL A.C. VOLTAGES ARE PEAK TO PEAK AND ARE MEASURED WITH A 25MHz CRO USING A CORRECTLY COMPENSATED PROBE; WITH THE UNIT DRIVEN TO FULL POWER.

Title - CIRCUIT DIAGRAM - POWER AMPLIFIER TYPE 3019

Drawing No: ACC 3019

Date: 10-10-72

RACAL The Electronics Group

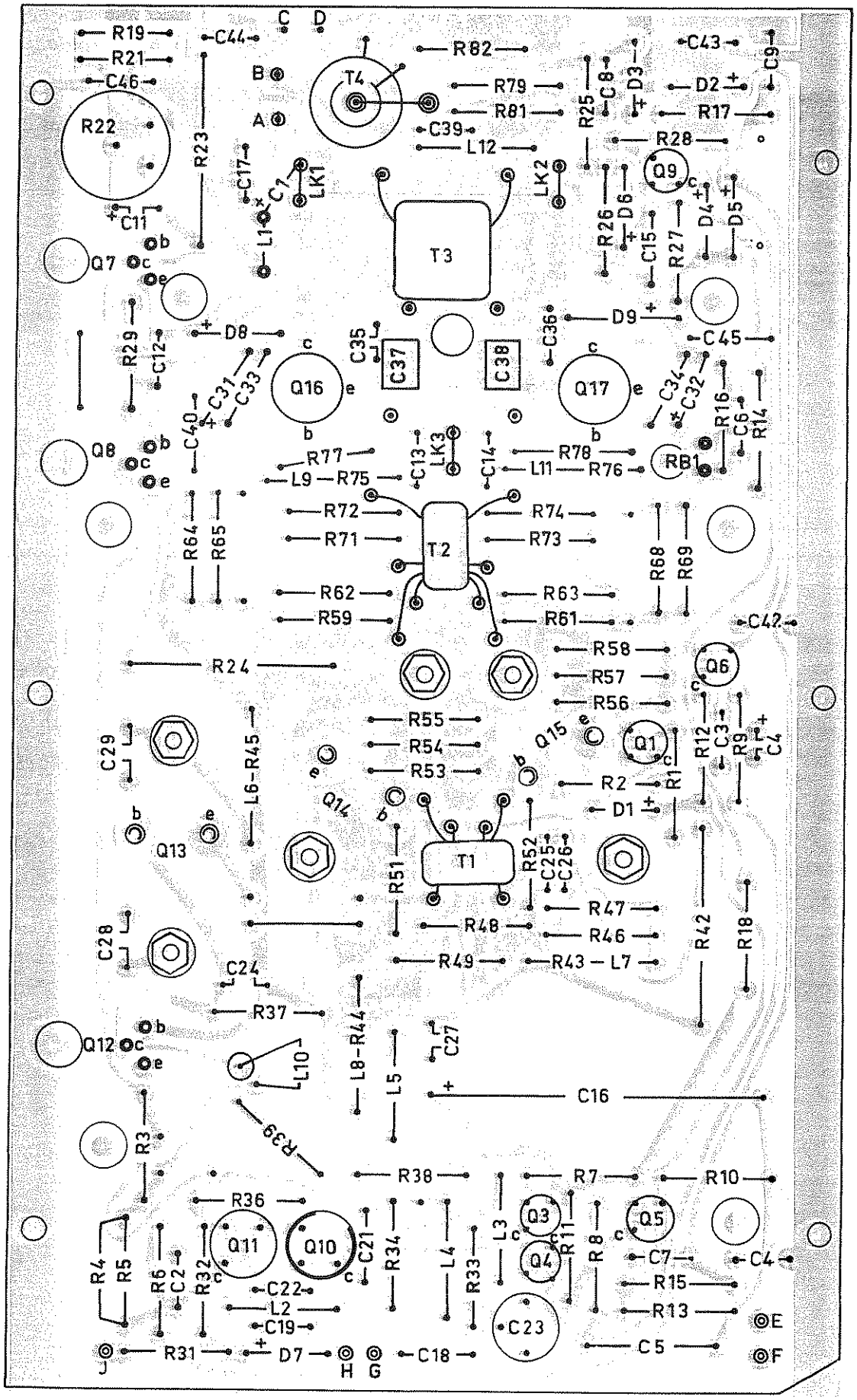

C1 MOUNTED UNDERSIDE.

Title

- BOARD LAYOUT -
POWER AMPLIFIER
TYPE 3019

Drawing No: ACH 3019

Date: 10-10-72

RACAL
The Electronics Group

COMPONENT	RATE	TOL %	VALUE	MANUFACTURER & TYPE		QTY	CIRCUIT REFERENCES
RESISTORS FIXED							
Metal Oxide	½W	5	2.7	WELWYN	MR5	4	R71, 72, 73, 74
			3.3			1	R29
			4.7			4	R46, 47, 48, 49
		2	8.2			6	R53, 54, 55, 56, 57, 58
		5	10	CORNING TR5		1	R19
			22	CORNING TR5		1	R3
			27			1	R38
			33			2	R51, 52
		2	39			1	R5
		2	47			1	R33
		5	56			1	R21
			82			4	R64, 65, 68, 69
		2	100			1	R37
		2	390			2	R17, 82
		2	5.6K			1	R15
		2	6.8K			1	R13
		2	33			1	R34
Carbon	½W	5	SOT	IRH	BTS	1	R4
		20	4.7	MORGANITE	AS	2	R59, 61
		5	10	IRH	BTS	3	R77, 78,79
			56			2	R62, 63
			100			1	R6
			220			2	R36, 81
			330			1	R31
			390			2	R11, 12
			470			1	R28
			1K			3	R25, 26, 27
			1.8K			1	R18
			4.7K			1	R16
			10K			1	R2
			15K			1	R1
			47K			2	R7, 9
			56K			1	R14
			100K			1	R32
			470K			1	R8
			2.2M			1	R10
Wirewound	5W	5	5.6	IRC	PW5	1	R42
			10			1	R24
			22		ASW2	1	R39
	2W	5	180		ASW2	1	R23
RESISTORS VARIABLE							
Wirewound			100	PLESSEY	WMP-PC	1	R22
THERMISTOR				PHILIPS	2322-660-91006	1	RB1
CAPACITORS FIXED							
Ceramic	63V	2	22p	PHILIPS	2222-638-10229	1	C24
Ceramic Disc	500V	10	68p	DUCON	N750	1	C39
			220p		CDS-Y	2	C33, C34
			3300p	MSK	CURVE YY	2	C35, 36
	50V	+80-20	0.01	MSK	BM	2	C2, 6
Chip		20	0.47	VITRAMON	VJ2224x47 4MF	2	C37, 38

COMPONENT	RATE	TOL %	VALUE	MANUFACTURER & TYPE		QTY	CIRCUIT REFERENCES
Polyester	250V	20	0.047	WIMA	MKS	2	C18, 21
Met. Polyester	100V	20	0.1	AEE	PHE240	19	C3, 7, 8,9,12,13,14,17,19,22 C25,26,28,29,41,42,43,44,46
Met. Film	50V	20	0.47	SHIZUKI	PML474M50	3	C15, 40, 45
			2.2		PML225M50	1	C5
Tantalum	35V	+50-20	0.47	SIEMENS	B45134	1	C4
	25V		4.7		B45134	3	C1, 31, 32
	6.3V		22			2	C11, 27
Electrolytic	25V	+100-10	1000	ELNA	RA2W	1	C16
CAPACITORS VARIABLE			7-35p	STETTNER	02 7/35 N750	1	C23
TRANSISTORS				FAIRCHILD	AY1112	2	Q1, 4
					AY1116	1	Q5
					AY1117	1	Q6
					2N 3569	1	Q9
					2N 4250	1	Q2
				MOTOROLA	2N5193	2	Q7, 8
					2N6097	2	Q16, 17
				PHILIPS	BDY 62	3	Q13, 14, 15
					BD 135	1	Q12
					OC 958	2	Q10, 11
DIODE Zener				FAIRCHILD	AN 2003	6	D1,2,3,4,5,6
				MULLARD	BZY88/C3V9	1	D7
					BZX70/C33	2	D8, 9
INDUCTOR		10	10uH	CAMBION	3640-45-2	1	L4
			18uH		3640	1	L10
			33uH		3640-57-2	4	L2, 3, 5, 12
				RACAL	AAT 3050	5	L6,7,8,9,11 includes R43,44,45,75,76
				RACAL	AAT 3057	1	L1
TRANSFORMER				RACAL	AAT 3051	1	T1
					3052	1	T2
					3053	1	T3
					3054	1	T4

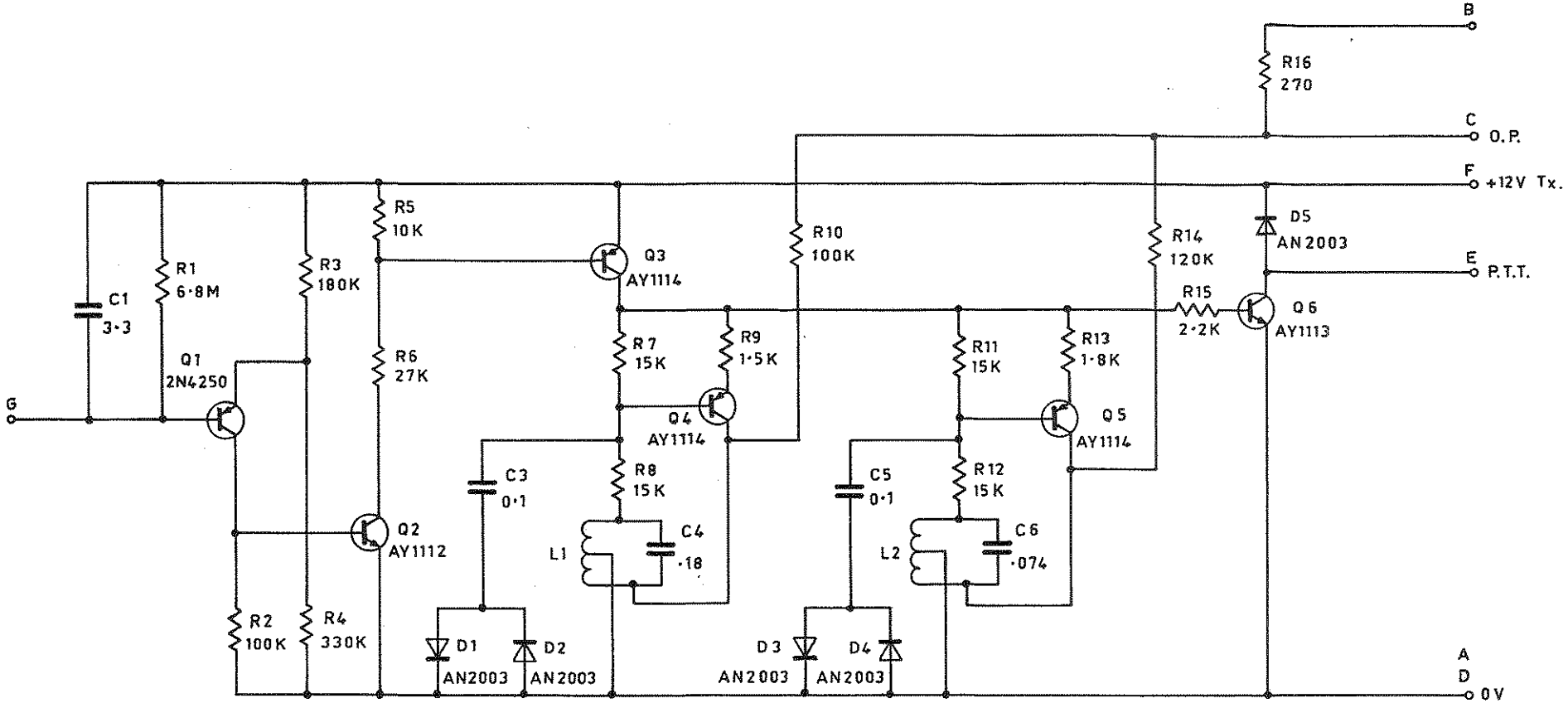

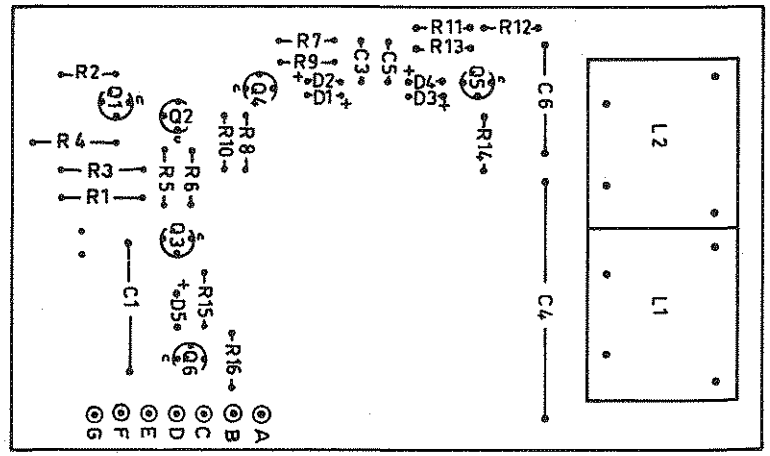

Title	- CIRCUIT DIAGRAM & BOARD LAYOUT TWO TONE GENERATOR TYPE 4186
Drawing No: ABC 4186	Date: 24-10-72

RACAL The Electronics Gr

COMPONENT	RATE	TOL %	VALUE	MANUFACTURER & TYPE		QTY	CIRCUIT REFERENCES
RESISTORS FIXED							
Metal Glaze	¼W	5	270	IRH	RGQ	1	R16
			1.5K			1	R9
			1.8K			1	R13
			2.2K			1	R15
			10K			1	R5
			15K			4	R7, 8, 11, 12
			27K			1	R6
			100K			2	R2, 10
			120K			1	R14
Metal Oxide	½W	5	180K	CORNING	TR5	1	R3
			330K			1	R4
Carbon	½W	10	6.8M	PHILIPS	2322-212-12685	1	R1
CAPACITORS FIXED							
Styroseal	50V	5	0.074	DUCON	DFB	1	C6
			0.18			1	C4
Ceramic	50V	+50-20	0.1	MSK	BM	2	C3, 5
TRANSISTORS				FAIRCHILD	2N4250	1	Q1
					AY1112	1	Q2
					AY1113	1	Q6
					AY1114	3	Q3, 4, 5
DIODES				FAIRCHILD	AN2003	5	D1 - D5
INDUCTORS				RACAL	ABT 1958K	2	L1, 2

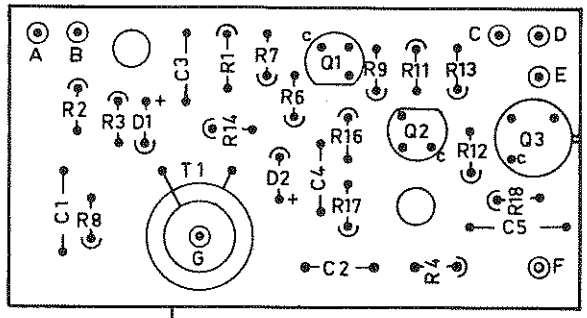

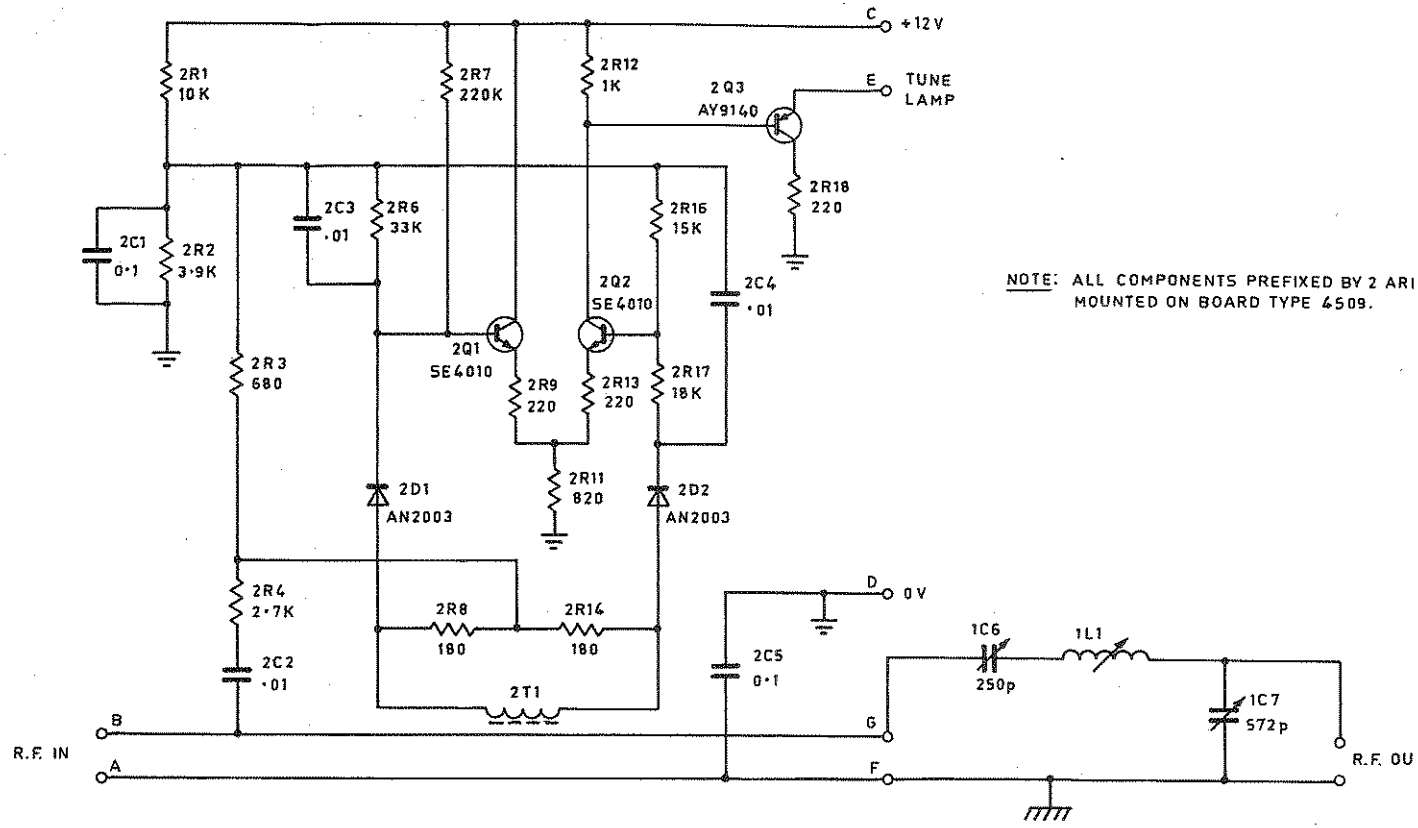

NOTE: ALL COMPONENTS PREFIXED BY 2 ARI
MOUNTED ON BOARD TYPE 4509.

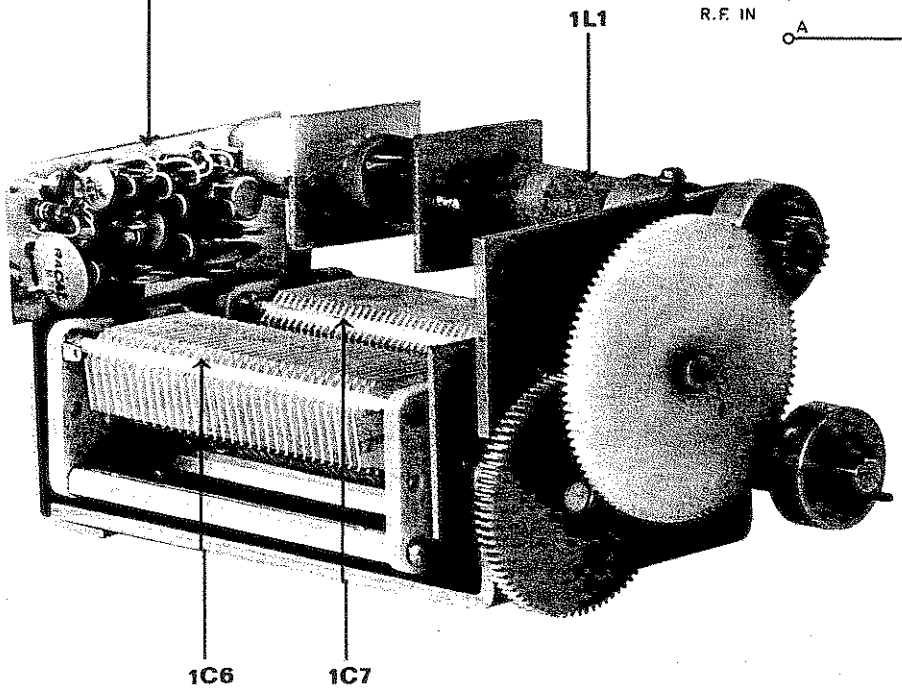

Title - CIRCUIT DIAGRAM & LAYOUT -
AERIAL TUNING UNIT
TYPE 3032

Drawing No: ABC 3032 Date: 17-7-72

RACAL The Electronics Gr

COMPONENT	RATE	TOL %	VALUE	MANUFACTURER/SUPPLIER		QTY	CIRCUIT DESCRIPTION
CAPACITORS VARIABLE			250pF	JACKSON	5050/A/250/023	1	C6
			572pF		5050/A/572/012	1	C7
INDUCTANCE ASSEMBLY				RACAL	ABD 3083	1	1L1
KNOB) CONTROL KNOB				ELNA	73-14-¼	1	
COVER PLATE)				ELNA	1450-14	1	
NUT COVER)				ELNA	1454-14	1	
REFLECTOMETER ASSEMBLY comprising:-				RACAL	AAA 4509	1	
RESISTORS FIXED							
Carbon	½W	5	220	IRH	BTS	3	2R9, 13, 18
			15K			1	2R16
			18K			1	2R17
			33K			1	2R6
			220K			1	2R7
Met Oxide	½W	5	180	CORNING	TR5	2	2R8, 14
			680			1	2R3
			820			1	2R11
			1K			1	2R12
			2.7K			1	2R4
			3.9K			1	2R2
			10K			1	2R1
CAPACITORS FIXED							
Disc Ceramic	50V	+80-20	0.01	MSK	BM	3	2C2, 3, 4
	50V	+80-20	0.01	MSK	BM	2	2C1, 5
Transistors				FAIRCHILD	SE4010	2	Q1, 2
					AY9140	1	Q3
Diode				FAIRCHILD	AN2003	2	D1, 2
Transformer				RACAL	AAT3054	1	T1

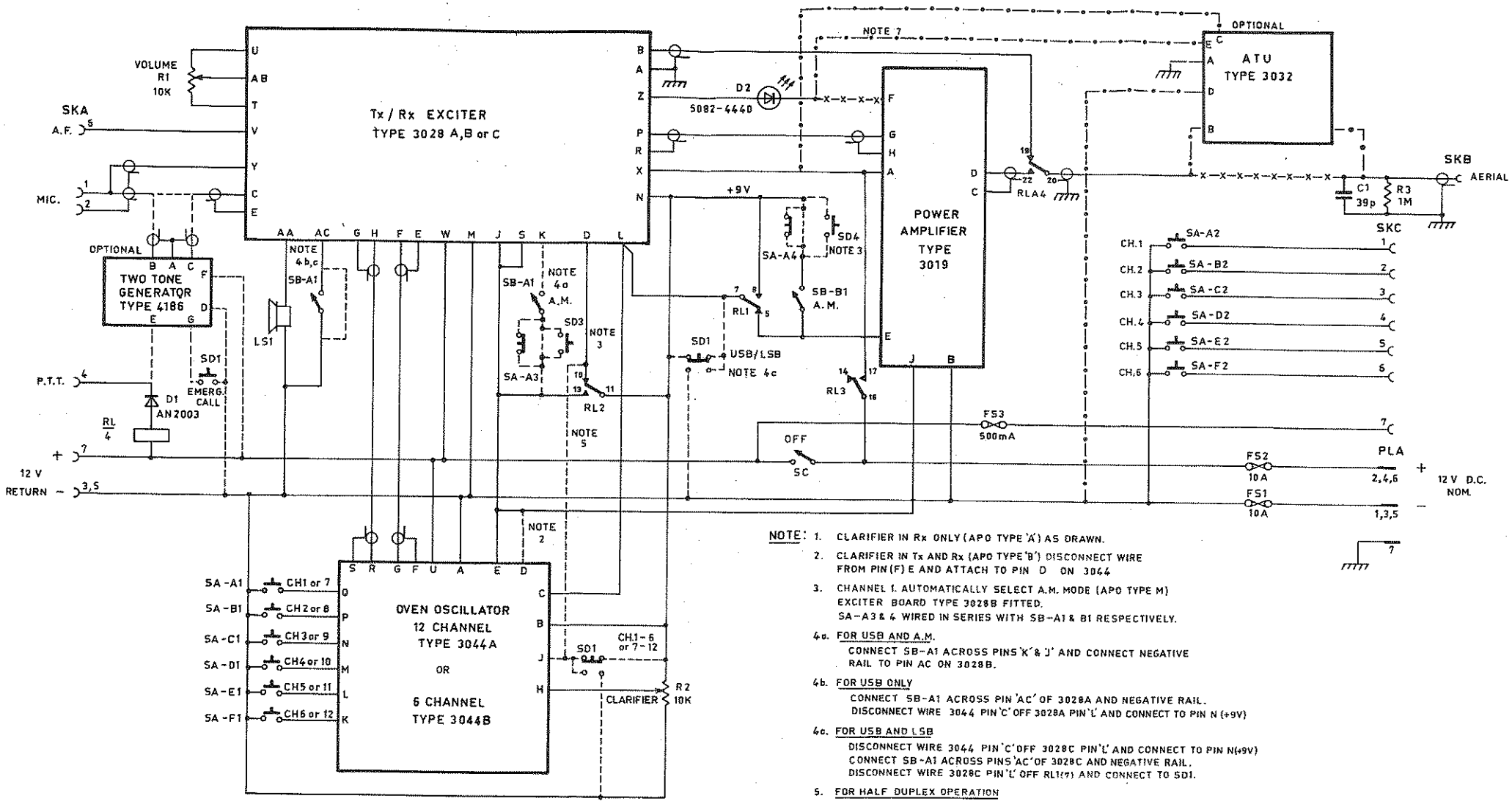

NOTE:

1. CLARIFIER IN Rx ONLY (APO TYPE 'A') AS DRAWN.
2. CLARIFIER IN Tx AND Rx (APO TYPE 'B') DISCONNECT WIRE FROM PIN (F) E AND ATTACH TO PIN D ON 3044
3. CHANNEL 1. AUTOMATICALLY SELECT A.M. MODE (APO TYPE M) EXCITER BOARD TYPE 3028B FITTED. SA-A3 & 4 WIRED IN SERIES WITH SB-A1 & B1 RESPECTIVELY.

4a. FOR USB AND A.M.
CONNECT SB-A1 ACROSS PINS 'K' & 'J' AND CONNECT NEGATIVE RAIL TO PIN AC ON 3028B.

4b. FOR USB ONLY
CONNECT SB-A1 ACROSS PIN 'AC' OF 3028A AND NEGATIVE RAIL.
DISCONNECT WIRE 3044 PIN 'C' OFF 3028A PIN 'L' AND CONNECT TO PIN N (+9V)

4c. FOR USB AND LSB
DISCONNECT WIRE 3044 PIN 'C' OFF 3028C PIN 'L' AND CONNECT TO PIN N(+9V)
CONNECT SB-A1 ACROSS PINS 'AC' OF 3028C AND NEGATIVE RAIL.
DISCONNECT WIRE 3028C PIN 'L' OFF RL1(7) AND CONNECT TO SD1.

5. FOR HALF DUPLEX OPERATION
CONNECT PIN J OF 3044 TO PIN D OF 3028.

6. FUNCTION OF SD MAY BE ONE OF :-
(a) CHANNELS 1 TO 6 OR 7 TO 12.
(b) USB/LSB
(c) EMERGENCY CALL (TWO TONE GENERATOR)

7a. WHEN ATU IS FITTED DELETE WIRING SHOWN THUS -X-X-X-X- & C1 AND ADD ALTERNATIVE WIRING SHOWN THUS —•——•——•——•—

Title - CHASSIS WIRING DIAGRAM - TRANSCEIVER TRA 7928

Drawing No: ACC 3000

Date: 11-10-72

RACAL The Electronics Group

COMPONENT	RATE	TOL %	VALUE	MANUFACTURER & SUPPLIER		QTY	CIRCUIT REFERENCES
POTENTIOMETER/ SWITCH CURVE C (VOL) ROTARY D.P.S.T. 3/4 PLAIN ENDED SHAFT		20	10K	IRC	CTS-45	1	R1/SC
POTENTIOMETER/ SWITCH CURVE A (CLAR) ROTARY D.P.S.T. 3/4 PLAIN ENDED SHAFT		20	10K	IRC	CTS-45	1	R2/SB
KNOB) FOR R1/SC				ELNA	73-14-¼	2	
COVER PLATE) R2/SB				ELNA	1450-14	2	
NUT COVER)				ELNA	1454-14	2	
6 PUSHBUTTON SWITCH ASSY				RACAL	ABSW3031	1	SA
OR							
7 PUSHBUTTON SWITCH ASSY				RACAL	ABSW3060	1	SA
RELAY	12V			SIEMENS	V23054-L0015-F110	1	RL
RELAY BASE				SIEMENS	V23154-Z1015	1	
RELAY RETAINER				SIEMENS	V23154-Z1027	1	
DIODE				FAIRCHILD	AN2003	1	D1
DIODE LIGHT EMITTING				HEWLETT PACKARD	5082-4400	1	D2
DIODE MTG.				HEWLETT PACKARD	5082-4418	1	FOR D2
RESISTOR	¼W	5	33K	IRH	BTS	1	R3
SPEAKER 5"x3"	8ohm			ROLA	F6	1	LS1
FUSE			10A	AUSTRALUX	3AG	2	FS1, FS2
			500mA	AUSTRALUX	3AG	1	FS3
FUSEHOLDER	10A 240V			MCMURDO	PFH125	3	
SOCKET, 7 WAY (MICROPHONE)				PREA	8-9052/C79-02	1	SKA
SOCKET, BNC (AERIAL)					UG625/B-U	1	SKB
SOCKET, 7WAY (EXTERNAL ATU SELECT)				PAINTON	74-10-0756-10	1	SKC
PLUG, 7 WAY (D.C. INPUT)				PAINTON	74-10-0706-10	1	PLA
TERMINAL (EARTH)				BELLING & LEE	L1568/ISC/BLACK	1	
COVER, TOP				RACAL	ACD3090	1	
COVER, BOTTOM				RACAL	ACD3091	1	
TERMINAL (AERIAL & EARTH)				BELLING & LEE	L1568/615	1	REPLACES SEPARATE AERIAL & EARTH TERMINALS WHEN ATU TYPE 3032 FITTED.

Guarantee

We, Racal Electronics Pty. Ltd., guarantee, subject to the following terms, to replace or, at our option, repair, free of charge, any components or parts of any goods supplied which fail within 12 months of the date of despatch solely as a result of faulty materials or bad workmanship.

1. Defective components or parts must be returned to our factory carriage paid, and any labour costs involved in refitting into an equipment will be chargeable to the customer.
2. Damage caused by unauthorised alteration or substitution of non-standard parts by incorrect installation or any third party or consequential damage or loss is not covered by this guarantee.
3. This guarantee will apply only if the equipment is bought from Racal Electronics Pty. Ltd. or an authorised vendor at the appropriate prices and terms.
4. Components such as electric bulbs, semiconductors and valves are covered by such guarantee as is given by the manufacturers of those components.
5. This guarantee cannot be altered by any person or Company other than Racal Electronics Pty. Ltd.

PLEASE COMPLETE FORM BELOW AND RETURN TO SUPPLIER
TEAR OFF HERE

REGISTRATION FORM

Name of Purchaser .....

Address of Purchaser .....

Equipment Type .....

Equipment Serial Number .....

Date of Purchase .....

Name of Supplier .....

Address of Supplier .....

The guarantee for this equipment will not be effective unless this form is returned duly completed.